SHARP SERVICE MANUAL

No. 00ZUXB800ASME

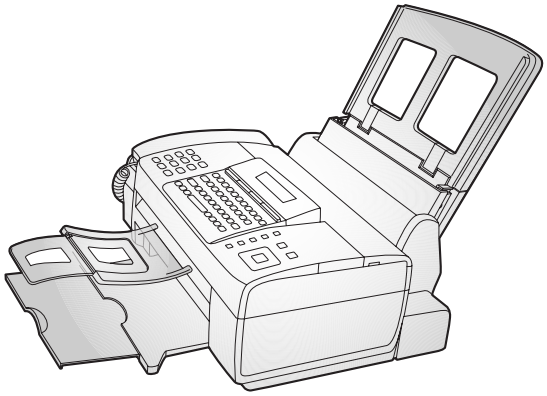

FACSIMILE

MODEL UX-B800A

MODEL	SELECTION CODE	DESTINATION
UX-B800	A	Australia

CONTENTS

CHAPTER 1. GENERAL DESCRIPTION
[1] Caution 1-1
[2] Specifications 1-2
[3] Operation panel 1-3
[4] Transmittable documents 1-5
[5] Installation 1-6
[6] Scan to E-mail 1-10
[7] Clearing paper jams 1-12
[8] Quick reference guide 1-13

CHAPTER 2. ADJUSTMENTS
[1] Adjustments 2-1
[2] Diagnostics and service soft switch 2-2
[3] Troubleshooting 2-40
[4] Error code table 2-41

CHAPTER 3. MECHANISM BLOCKS
[1] General description 3-1
[2] Ink jet printer 3-3
[3] Disassembly and assembly procedures 3-5

CHAPTER 4. DIAGRAMS
[1] Block diagram 4-1
[2] Wiring diagram 4-2
[3] Point-to-point diagram 4-3

CHAPTER 5. CIRCUIT DESCRIPTION
[1] Circuit description 5-1
[2] Circuit description of control PWB 5-2
[3] Circuit description of LIU PWB 5-13
[4] Circuit description of power supply PWB 5-15
[5] Circuit description of CIS unit 5-15

CHAPTER 6. CIRCUIT SCHEMATICS AND PARTS LAYOUT
[1] Control PWB circuit 6-1
[2] LIU PWB circuit 6-14
[3] Power Supply PWB circuit 6-19
[4] Operation Panel PWB circuit 6-21

CHAPTER 7. OTHER
[1] Protocol 7-1
[2] Power on sequence 7-2
[3] Service tools 7-3
[4] Rewriting version up the FLASH ROM 7-6

Parts Guide

Parts marked with " ⚠ " are important for maintaining the safety of the set. Be sure to replace these parts with specified ones for maintaining the safety and performance of the set.

SHARP CORPORATION

This document has been published to be used for after sales service only.
The contents are subject to change without notice.

CHAPTER 1. GENERAL DESCRIPTION

[1] Caution

1. Caution for Battery replacement

(Danish) ADVARSEL !
Lithiumbatteri-Eksplosionsfare ved fejlagtig håndtering.
Udskiftning må kun ske med batteri af samme fabrikat og type.
Levér det brugte batteri tilbage til leverandoren.

(English) Caution !
Danger of explosion if battery is incorrectly replaced.
Replace only with the same or equivalent type
recommended by the equipment manufacturer.
Discard used batteries according to manufacturer's instructions.

(Finnish) VAROITUS
Paristo voi räjähtää, jos se on virheellisesti asennettu.
Vaihda paristo ainoastaan laitevalmistajan suosittelemaan
tyyppiin. Hävitä käytetty paristo valmistajan ohjeiden mukaisesti.

(French) ATTENTION
Il y a danger d'explosion s' il y a remplacement incorrect
de la batterie. Remplacer uniquement avec une batterie du
même type ou d'un type recommandé par le constructeur.
Mettre au rébut les batteries usagées conformément aux
instructions du fabricant.

(Swedish) VARNING
Explosionsfare vid felaktigt batteribyte.
Använd samma batterityp eller en ekvivalent
typ som rekommenderas av apparattillverkaren.
Kassera använt batteri enligt fabrikantens
instruktion.

(German) Achtung
Explosionsgefahr bei Verwendung inkorrekter Batterien.
Als Ersatzbatterien dürfen nur Batterien vom gleichen Typ oder
vom Hersteller empfohlene Batterien verwendet werden.
Entsorgung der gebrauchten Batterien nur nach den vom
Hersteller angegebenen Anweisungen.

2. Precautions for using Lead-Free Solder

1. **Employing lead-free solder**

   The **Control PWB, LIU PWB, Power Supply PWB** and **Operation Panel PWB** of this model employs lead-free solder.
   This is indicated by the "LF" symbol printed on the PWB and in the service manual.
   The suffix letter indicates the alloy type of the solder.
   Example:

   LFa
   Sn-Ag-Cu Indicates lead-free solder of tin, silver and copper.

2. **Using lead-free solder**

   When repairing a PWB with the "LF" symbol, only lead-free solder should be used. (Using normal tin/lead alloy solder may result in cold soldered joints and damage to printed patterns.)
   As the melting point of lead-free solder is approximately 40°C higher than tin/lead alloy solder, it is recommended that a dedicated bit is used, and that the iron temperature is adjusted accordingly.

3. **Soldering**

   As the melting point of lead-free solder (Sn-Ag-Cu) is higher and has poorer melting point (flow), to prevent damage to the land of the PWB, extreme care should be taken not to leave the bit in contact with the PWB for an extended period of time. Remove the bit as soon as a good flow is achieved.
   The high content of tin in lead free solder will cause premature corrosion of the bit.
   To reduce wear on the bit, reduce the temperature or turn off the iron when it is not required.
   Leaving different types of solder on the bit will cause contamination of the different alloys, which will alter their characteristics, making good soldering more difficult.
   It will be necessary to clean and replace bits more often when using lead-free solder. To reduce bit wear, care should be taken to clean the bit thoroughly after each use.

[2] Specifications

Print cartridge yield[1, 2]:	Replacement cartridge: SHARP **UX-C80B** Ink Save mode ON: Approx. 800 A4 pages Ink Save mode OFF: Approx. 480 A4 pages (The initial cartridge has the same yield as the above replacement cartridge.)
Paper tray capacity:	Approx. 200 A4 sheets (60 to 80 g/cm^2) (At room temperature; maximum stack height should not be higher than the line on the tray)
Recording system:	Thermal inkjet
Print resolution:	600 x 600 dpi
Effective printing width:	203 mm max.
Scan to E-mail:	Yes; requires an Internet connection and a router, switch, or hub to connect the machine. LAN cable (10Base-T straight-through cable) must be purchased separately. LAN interface: 10Base-T IEEE802.3
File formats:	Tiff (G4), PDF (G4)
Memory capacity[2]:	Approx. 100 average pages
Modem speed:	14,400 bps with auto fallback to lower speeds.
Transmission time[2]:	Approx. 6 seconds
Compatibility:	ITU-T (CCITT) G3 mode
Compression scheme:	MR, MH, MMR
Storable transmission destinations:	Rapid Keys: 36 A, B, C keys: 3(e-mail only) Speed Dial numbers: 63
Telephone function:	Yes (cannot be used if power fails)
Effective scanning width:	208 mm max.
Applicable telephone line:	Public switched telephone network
Reception modes:	AUTO, MANUAL, TEL/FAX
Automatic document feeder:	A4: 20 sheets max. (60 - 80 g/cm^2. paper; temperature: 18 - 28°C; humidity: 45 - 65% RH)
Input document size:	**Automatic feeding:** Width: 148 to 210 mm Length: 140 to 297 mm **Manual feeding:** Width: 70 to 210 mm Length: 140 to 356 mm
Scanning Resolution:	Standard: 203 x 98 dpi Fine: 203 x 196 dpi Super fine: 203 x 391 dpi Halftone: 203 x 196 dpi
Halftone (grayscale):	64 levels
Contrast control:	Automatic/Dark selectable
Copy function:	Single/Multi/Sort (99 copies/page)
Display:	LCD display, 20 digits x 2 lines
Power requirements:	230-240 V AC, 50 Hz
Power consumption:	Standby: 6.0 W, Maximum: 40 W
Operating temperature:	15 - 32°C
Humidity:	25 - 80% RH
Dimensions (without attachments):	Width: 380 mm Depth: 280 mm Height: 156 mm
Weight (without attachments):	Approx. 4.5 kg

[1]Ink Save mode is initially turned off. To turn on Ink Save mode.
[2]Based on Sharp Standard Chart at standard resolution, excluding time for protocol signals (i.e., ITU-T phase C time only).

As a part of our policy of continuous improvement, SHARP reserves the right to make design and specification changes for product improvement without prior notice. The performance specification figures indicated are nominal values of production units. There may be some deviations from these values in individual units.

[3] Operation panel

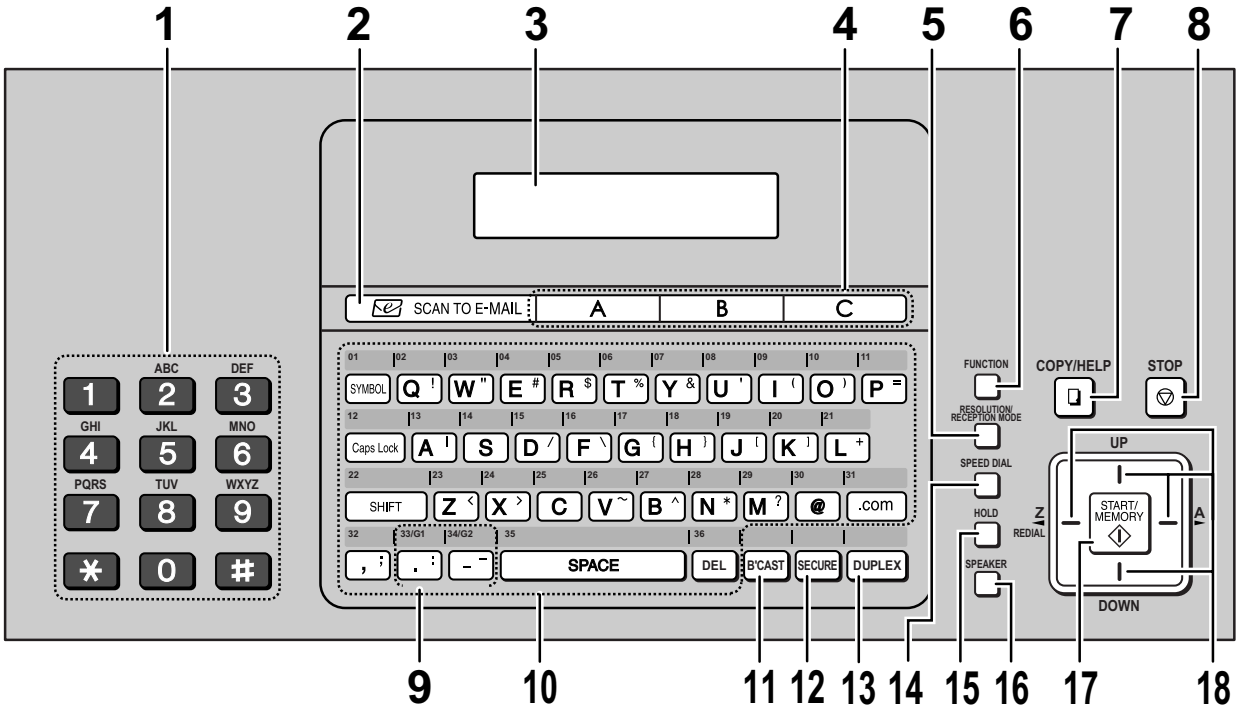

Note: Affix the Rapid Key labels as shown above.

1. **Number key:** Use to dial numbers.
2. **SCAN TO E-MAIL key:** Press to send a document to an e-mail recipient.
3. **Display:** This displays messages to help you operate the machine.
4. **A, B, C keys:** An e-mail address can be stored in each key for one-touch selection.
5. **RESOLUTION/RECEPTION key:** When a document is in the feeder, press to adjust the scanning resolution. At any other time, press to select the reception mode.
6. **FUNCTION key:** Press this key followed by the arrow keys to select special functions and settings.
7. **COPY/HELP key:** When a document is in the feeder, press to make a copy. At any other time, press to print the Help List.
8. **STOP key:** Press to cancel an operation before it is completed.
9. **Group keys:** Multiple fax or e-mail destinations can be stored in each key for one-touch selection.
10. **Rapid keys/Letter keys:** A fax number or e-mail address can be stored in each of these keys for one-touch selection (attach the Rapid Key labels). When entering text, the keys are used as letter keys.
11. **BROADCAST key:** Press to send to multiple fax or e-mail destinations.
12. **SECURE key:** Press to use the fax secure receive function.
13. **DUPLEX key:** Use to scan two-sided documents for transmission and copying.
14. **SPEED DIAL key:** Press to select a fax or e-mail destination stored in a 2-digit Speed Dial number.
15. **HOLD key:** Press to put a phone call on hold.
16. **SPEAKER key:** Press to listen to the line and fax tones through the speaker when faxing.
    Note: **This is not a speakerphone.** It cannot be used for speaking.
17. **START/MEMORY key:** Press after dialing to send a fax. Press before dialing to send a fax through memory. Press in the date and time display to show the percentage of memory currently used.
18. **Arrow key:** Use to scroll through and select settings, and to search for stored destinations.

Letter keys
Use these keys when the display prompts you to enter a name, e-mail address, or other text.

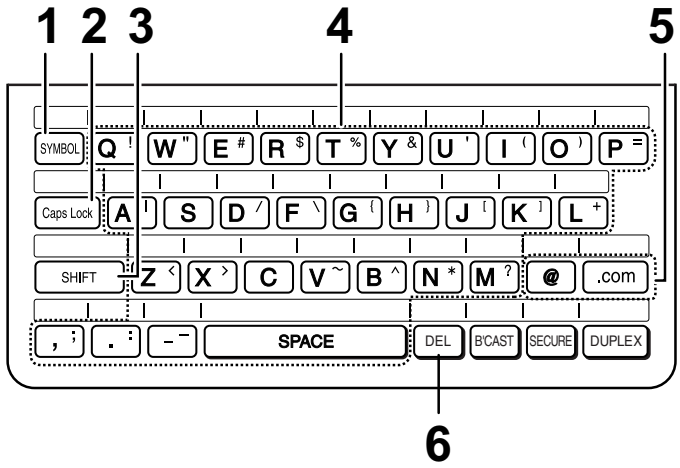

1. **SYMBOL key:** Press to enter a symbol (the character appearing on the right side of each letter key). Press again to return to normal letter entry mode.
2. **Caps Lock key:** Press to enter upper case letters. Press again to return to lower case letter entry.
3. **SHIFT key:** Hold down to temporarily change case.
4. **Letter keys:** Use to enter letters.
5. **@ key, .com key:** Press to enter "@" and ".com" when entering an e-mail address.
6. **DEL key:** Press to delete the character marked by the cursor. When the cursor is to the right of a line of text, press to backspace and clear characters. (The cursor can be moved by pressing or .) To delete all entered characters, hold down until all characters are cleared.

Monitoring phone conversations

When speaking through the handset, you can press SPEAKER to allow a third person to listen to the conversation through the speaker. (To turn off the speaker, press the key again.)

To adjust the volume of the speaker when monitoring a conversation, press or (the volume reverts to the lowest setting each time the handset is replaced).

Note that **the speaker cannot be used for speaking**; it is only for listening.

To avoid feedback (a loud howling sound), be sure to turn off the speaker (press SPEAKER once again) before you replace the handset.

[4] Transmittable documents

1. Document Sizes

Normal size	Width	148 - 210 mm
	Length	140 - 297 mm

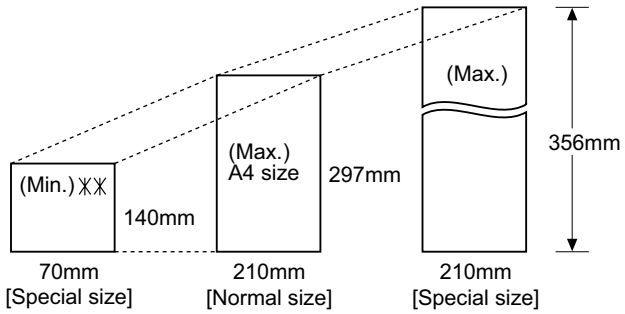

※※ Use document carrier sheet for smaller documents.

- With special sizes, only one sheet can be fed into the machine at a time. Insert next page into feeder as current page is being scanned.

2. Paper Thickness & Weight

	10 sheets	1 sheet (Manual)
Paper weight	20 lbs. (74.3 g/m^2) at the environment 23 ± 5°C 55 ± 10%	14 lbs. ~ 42 lbs. (52 g/m^2 ~ 157g/m^2)
Paper thickness (ref.)	0.09 mm	0.06 mm ~ 0.18mm
Paper size	A4 (210 mm x 297 mm)	
Feeder capacity	A4: 10 sheets max.	

3. Document Types

- Normal paper

  Documents handwritten in pencil (No. 2 lead or softer), fountain pen, ball-point pen, or felt-tipped pen can be transmitted.

  Documents of normal contrast duplicated by a copying machine can also be transmitted.
- Diazo copy (blue print)
- Diazo copy documents of a normal contrast may be transmitted.
- Carbon copy

  A carbon copy may be transmitted if its contrast is normal.

4. Cautions on Transmitting Documents

- Documents written in yellow, greenish yellow, or light blue ink cannot be transmitted.
- Ink, glue, and correcting fluid on documents must be dry before the documents can be transmitted.
- All clips, staples and pins must be removed from documents before transmission.
- Patched (taped) documents should be copied first on a copier and then the copies used for transmission.
- All documents should be fanned before insertion into the feeder to prevent possible double feeds.

5. Automatic Document Feeder Capacity

Number of pages that can be placed into the feeder at as follows:

Normal size: max. ADF 20 pages

- Temperature: 18 ~ 28°C
- Humidity: 45 ~ 65%

Special size: single sheet only (manual feed)

NOTE

- When you need to send or copy more pages than the feeder limit, place additional pages in feeder when last page in feeder is being scanned.
- Place additional pages carefully and gently in feeder. If force is used, double-feeding or a document jam may result.

6. Readable Width & Length

The readable width and length of a document are slightly smaller than the actual document size.

Note that characters or graphics outside the effective document scanning range will not be read.

- **Readable width**

  208mm, max

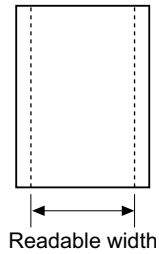

- **Readable length**

  This is the length of the document sent minus 4mm from the top and bottom edges.

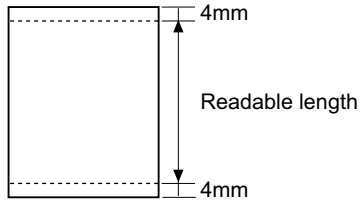

[5] Installation

1. Site selection

Take the following points into consideration when selecting a site for this model.

ENVIRONMENT

- The machine must be installed on a level surface.
- Keep the machine away from air conditioners, heaters, direct sunlight, and dust.
- Provide easy access to the front, back, and sides of the machine. In particular, keep the area in front of the machine clear, or the original document may jam as it comes out after scanning.
- The temperature should be between 15 - 32°C.
- The humidity should be between 25% and 80% (without condensation).

ELECTRICITY

AC 230-240 V, 50 Hz, earthed AC outlet is required.

Caution!

- Connection to a power source other than that specified will cause damage to the equipment and is not covered under the warranty.
- If your area experiences a high incidence of lightning or power surges, we recommend that you install a surge protector for the power and telephone lines. Surge protectors can be purchased at most telephone specialty stores.

If the machine is moved from a cold to a warm place...

Condensation may form on the reading glass if machine is moved from a cold to a warm place, this will prevent proper scanning of documents for transmission. Turn on the power and wait approximately 2 hours before using machine.

TELEPHONE JACK

A standard telephone jack must be located near the machine. This is the telephone jack commonly used in most homes and offices.

- Plugging the fax machine into a jack which is not a standard analog telephone jack, may result in damage to the machine or your telephone system.

2. Removing the packing tape

1) Open the cover (❶) and remove the tape (❷). (Do not install the print cartridge yet.)

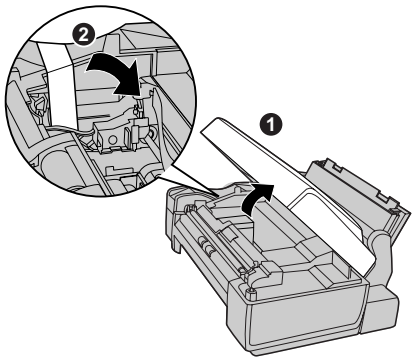

2) Close the cover.

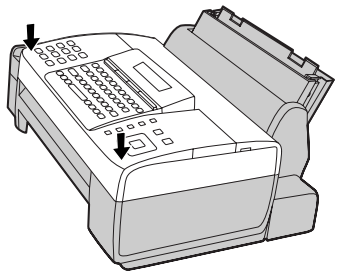

3. Connect the handset

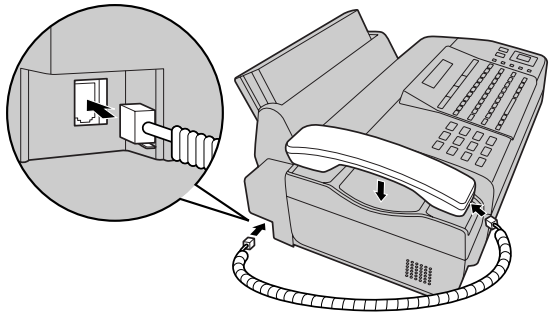

4. Attaching the tray

1) Attach the received document tray

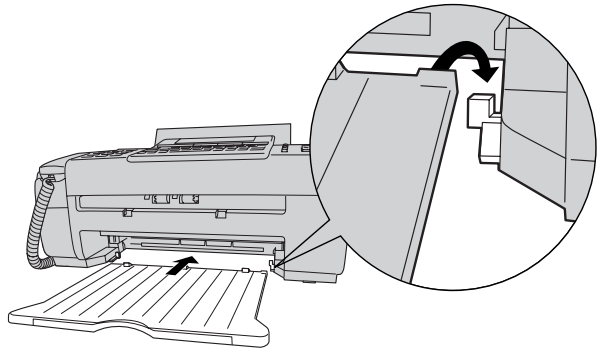

2) Attach the paper tray

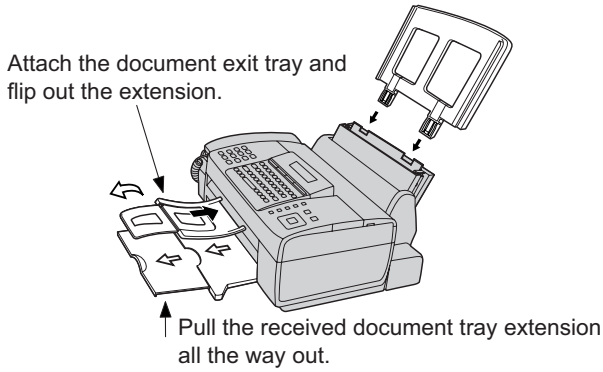

5. Loading Paper

Approximately 200 sheets of A4-size paper (60 - 80 g/m^2) can be loaded in the paper tray (at room temperature; maximum stack height should not be higher than the line on the tray).

1) Fan the paper, and then tap the edges against a flat surface to even the stack.

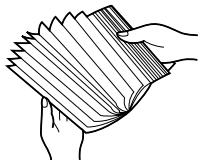

2) Pull the paper plate forward and insert the stack of paper into the tray, **print side up.**

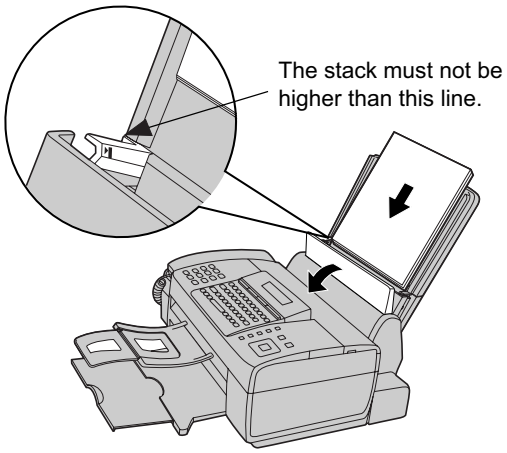

- If paper remains in the tray, take it out and combine it into a single stack with the new paper.
- Printing on the reverse side of the paper may result in poor print quality.
- Do not use paper that has already been printed on or is curled.
- Remove received faxes and other printed output before about 50 sheets accumulate in the received document tray (otherwise the sheets may scatter).

If at any time the display shows **[ADD PAPER &] / [PRESS START KEY]**, check the paper tray. If the tray is empty, add paper. If there is paper in the tray, take it out and then reinsert it.

When finished, press START/MEMORY .

6. Connecting the power cord

Caution! Remove all packing tape before plugging in the power cord, or machine to the machine may result.

- The power outlet must be installed near the equipment and must be easily accessible.

Plug the plug adapter into a 230-240 V, 50 Hz, earthed (3-prong) AC outlet.

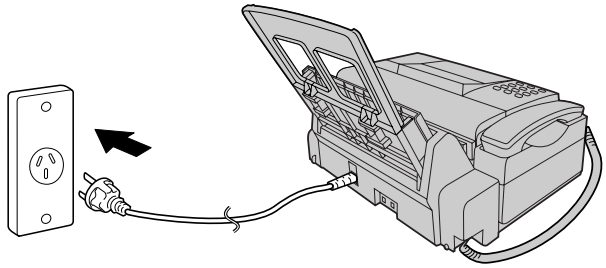

- The display will show **[CHECK CARTRIDGE]** until you install the print cartridge.

When disconnecting the machine, always disconnect the phone line before you disconnect the power cord. When re-connecting the machine, always connect the power cord before connecting the phone line.

It is recommended that you install surge protectors for the power and telephone lines. Surge protectors can be purchased at most telephone specialty sotres.

7. Installing the print cartridge

Print cartridge yield
SHARP UX-C80B replacement cartridge
Ink Save mode OFF: Approx. 480 A4 pages
Ink Save mode ON: Approx. 800 A4 pages (The initial cartridge has the same yield as the replacement cartridge.)
- Ink Save mode is initially turned off. To turn on Ink Save mode.

Caution! Do not open the cover while the machine is printing.

Note: Keep ink cartridges sealed in their packages until you are ready to install them. It is recommended that you do not use a cartridge that has been left unused for a long time after opening, as the print quality may be considerably degraded.

- Make sure the machine's power cord is plugged in and paper is loaded in the paper tray.

1) Open the cover (grasp the finger grip).

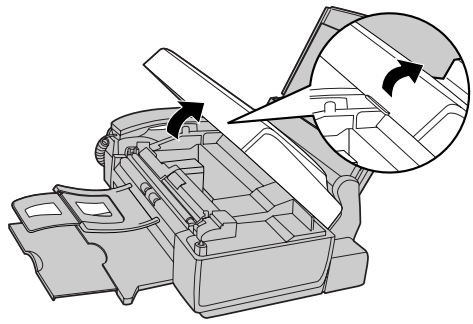

If the display shows **[PRINTER ERROR]** or **[PRINTER ERROR/ CHECK PAPER]**, open the cover and check for jammed paper. Remove any jammed paper and close the cover.

2) Remove only the tape from the new cartridge.
   - **Make sure all tape is removed.**

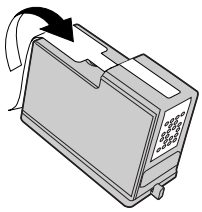

   - **CAUTION! DO NOT** touch the gold contact area on the cartridge.

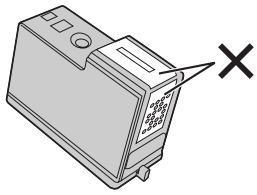

3) Make sure the cartridge holder is in the position shown. Place your fingers on top of the holder and open the holder release.

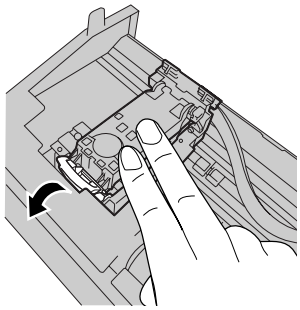

   - **CAUTION! DO NOT** touch the gold contact area or pull on the cable.
   - If you are replacing the cartridge, remove the old cartridge. If you are going to use the old cartridge again, place it in an airtight container (containers for this purpose can be purchased at most office supply stores).

4) Insert the new print cartridge (❶). Close the holder (❷), making sure it clicks into place.

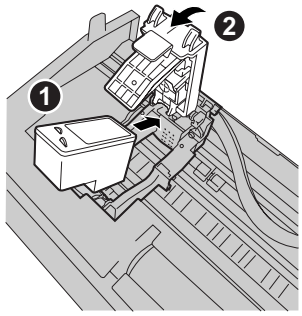

5) Close the cover, pressing firmly on both front corners.

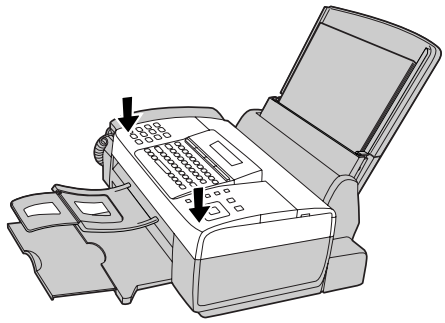

Display: **[CHANGE CARTRIDGE]/[1=NEW, 2=OLD].**

6) Press **1** **(NEW)** if the cartridge you installed is new.

Display: **[NEW CARTRIDGE?] / [OK:PRESS START]**

Press **2** **(OLD)** if the cartridge you installed is old.

7) Press START/MEMORY .

If you selected "**OLD**" in the previous step, this completes the installation procedure. (Note: If you find that print quality is not satisfactory, align the print cartridge.)

If you selected "**NEW**", the machine will print an alignment page. Continue with the steps below.

8) In the alignment page, locate the line that is closest to a straight line.

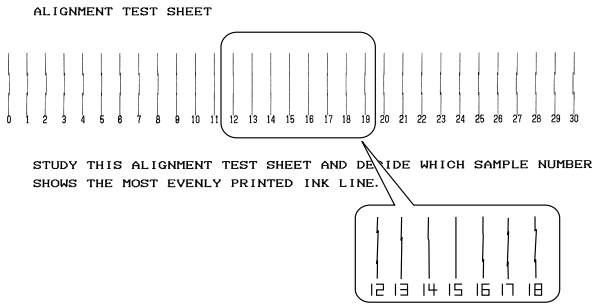

In this example, "15" is closest to a straight line.

9) Enter the number of the straightest line with the number keys.
   - To clear a mistake, press .

10) Press START/MEMORY .

The machine is initially set to print high quality images, which require more ink. If you prefer to use less ink and speed up drying time, change the "INK SAVE MODE" setting to "ON".

8. Connecting the Phone Line

Connect the phone line cord to the **TEL. LINE** socket and a wall telephone socket (use the provided adapter if needed).

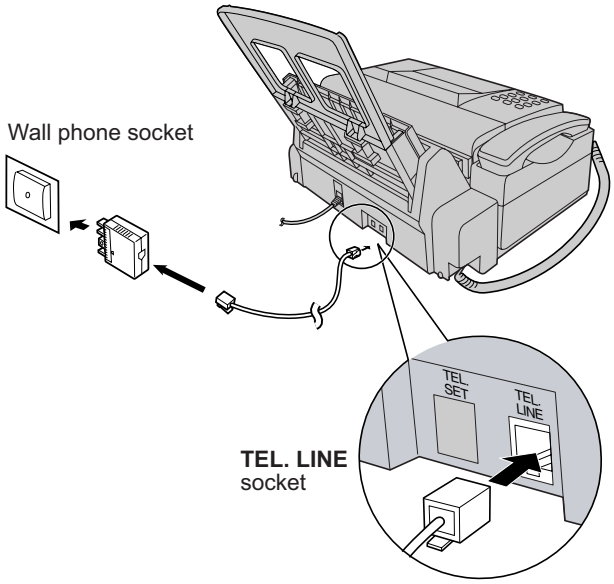

The machine is initially set for tone dialing. If you are on a pulse dial line, change the "DIAL MODE" setting.

It is recommended that you install surge protectors for the power and telephone lines. Surge protectors can be purchased at most telephone specialty stores.

[6] Scan to E-mail

The Scan to E-mail feature lets you scan a document and directly send the image to an e-mail recipient.

- This saves you the trouble of scanning the document into a computer and sending the scanned file using an e-mail program.
- The scanned document is sent as an attachment to an e-mail message. The attached file can be in TIFF or PDF format.

Requirements

To use Scan to E-mail, you must.

- Have an Internet connection.
- Have a broadband router or LAN switch/hub through which you can connect the machine to the Internet (the router is usually connected to a cable modem or DSL modem).

  A typical setup is shown below.

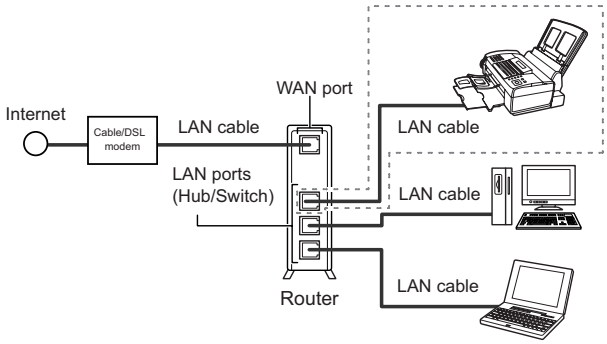

Note: The Scan to E-mail function is not compatible with mail servers that require security protection (SSL).

1. Connecting the Machine

The machine is connected using an Ethernet cable (not included). Please purchase a 10Base-T straight-through (regular) cable that supports 10Base-T.

Connect one end of the cable to the LAN port on the machine.

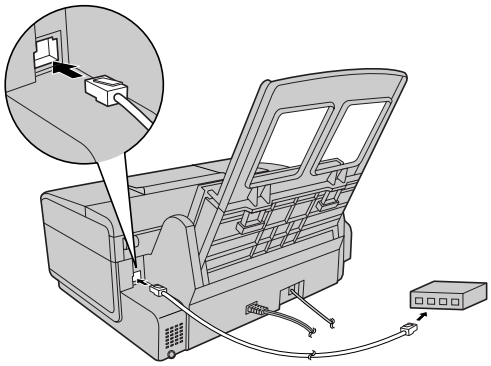

Connect the other end to a LAN port on your router, switch, or hub.

- If you are uncertain which port to connect the cable to, see the manual for the router, switch or hub.
- The connections can be made with all devices powered on.
- For other questions about how the machine should be connected, consult your Internet service provider.

1. IP address

The machine requires an IP address to communicate on the Internet.

If your network is set up to automatically assign IP addresses, you do not need to do anything; the machine will automatically receive an IP address when it is connected.

Automatic assignment of IP addresses is normally performed by a DHCP server, which may be a computer, router, or other device on the network. (Most routers used on home networks contain a DHCP server.)

If your network requires that a static (permanent) IP address be assigned to the machine, see Network Settings to enter the IP address and related information.

2. Checking your IP address and the connection

To check the machine's IP address and verify that the machine is able to communicate on the network, follow these steps.

1) Press FUNCTION, then until **[NETWORK SETTING]** appears.

2) 2 Press , then to show **[NETWORK INFORMATION]**

3) 3 Press .

- If the machine has automatically received an IP address and is able to communicate, **[IP ADDRESS/DHCP: ON]** will appear on the top line of the display, followed by the IP address on the bottom line. To show the machine's host name, press .
- If a static IP address has been entered in the machine and the machine is able to communicate, **[IP ADDRESS/DHCP: OFF]** will appear on the top line of the display, followed by the IP address on the bottom line. To show the machine's host name, press .
- If the machine was unable to receive an IP address automatically, or if the router locked up after the machine received an IP address, **[IP ADDRESS/DHCP: FAIL] / [192.168. 1 .201]** will appear. "192.168. 1 .201" is an IP address that is assigned to the machine for diagnostic purposes when connection fails (it cannot be used for regular communication).
- If **[NOW CONNECTING/CHECK LATER]** appears, press STOP to exit. Make sure the cable is connected correctly, wait briefly, and then repeat the procedure again.

3. If the machine is unable to communicate...
   - Check the Ethernet cable. Are the connections secure? Are you using straight-through (not crossover) cable for 10Base-T?
   - There may be a problem in the router or other device to which the machine is connected. Try removing and then restoring the power to the router (see the manual for the router).
   - If **[IP ADDRESS/DHCP: FAIL]** appears, remove and then reinsert the Ethernet cable plug, and repeat the procedure to check the machine's IP address. If the same message appears, check the device that acts as the DHCP server on your network (try removing and restoring the power). If your router is your DHCP server, make sure that DHCP is enabled in the router settings. If your network does not have a DHCP server, set a static IP address as explained.
   - If a static IP address has been set, make sure that the network settings are correct.

2. E-mail Settings

Before the Scan to E-mail function can be used, you must configure the e-mail settings.

The e-mail settings specify your outgoing mail server, as well as your sender name, sender address, and other items that appear in the e-mail message to which scanned image files are attached.

- It is easiest to configure the e-mail settings in the machine's Web page. The machine's Web page can be accessed from any computer on the same network as the machine.
- The e-mail settings can also be configured using the machine's operation panel.

Note: If your Internet service provider requires that you configure "SMTP Authentication" or "POP before SMTP" settings, you must use the Web page.

If you do not know your SMTP server name or the settings that are required, ask your Internet service provider.

1. Accessing the machine's Web page

To access the Web page, you will need to know the machine's host name or IP address (usually it is most convenient to use the host name).

To check the machine's host name or IP address, follow the procedure in Checking your IP address and the connection, or print the Network Settings List.

Type in the host name or IP address of the machine in the Address bar of the Web browser on your computer.

The Web page menu will appear. Select **E-mail Setup** and configure the settings. For explanations of the settings, click **Help** in the Web page menu.

Note: If the Web page is used while the machine is in operation (except for voice calls using the handset), machine operation may become unstable.

2. Using the machine's operation panel to configure the settings

Follow the steps below to display the e-mail settings, and then configure each setting as explained in the table on the next page.

1) Press FUNCTION, then until **[E-MAIL SETTING]** appears.
2) Press , then repeatedly until the setting that you wish to configure appears.
3) Press . (Note: This step is not necessary for the "FILE FORMAT" setting.)
4) Enter the required information for the setting as explained in the table on the next page.
5) After configuring the setting, the next e-mail setting will appear in the display. You can configure the next setting, or press STOP to exit.

3. E-mail settings

Enter the required information for each setting as explained below.

This is done in step 4 of the procedure on the previous page.

- The sender address and SMTP server settings are required. The other settings are optional.
- Use the letter keys to enter text. For information on using the letter keys.
- The e-mail subject, e-mail message, and file format that you enter below are default settings. They will be used if you do not specify these items at the time of transmission.

Setting	Description
SENDER NAME	Enter the sender name that will appear in the e-mail message (max. of 50 characters). When finished, press START/MEMORY.
SENDER ADDRESS	Enter your sender e-mail address (max. of 128 characters). When finished, press START/MEMORY. (Note: Be sure to enter your actual e-mail address. Return e-mail and undelivered mail reports will be sent to this address. In addition, some STMP servers reject outgoing e-mail if a valid sender e-mail address is not entered.)
E-MAIL SUBJECT	Enter a default subject (max. of 128 characters). When finished, press START/MEMORY.
E-MAIL MESSAGE	Enter a default message (max. of 256 characters). When finished, press START/MEMORY.
FILE FORMAT	This sets the default format of the file that is created when you scan a document. Press 1 for TIFF or 2 for PDF. **Initial setting:** TIFF
SMTP SERVER	Enter the host name or IP address of your outgoing (SMTP) mail server (max. of 60 characters). When finished, press START/MEMORY.

[7] Clearing paper jams

1. Clearing a jammed document

If the original document doesn't feed properly during transmission or copying, or **[DOCUMENT JAMMED]** appears in the display, first try pressing COPY/HELP . If the document doesn't feed out, remove it as explained below.

Important: Do not try to remove a jammed document without releasing it as explained below. This may damage the feeder mechanism.

1) Open the cover (❶). Rotate the lever so that points straight up (❷), and pull it up (❸). Pull the roller out to the right, and remove the document (❹).

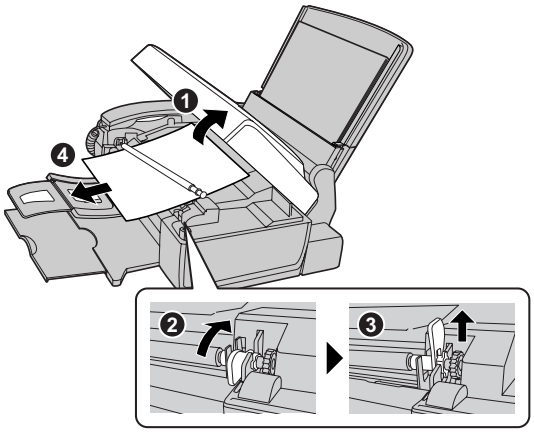

2) Replace the white roller, inserting the left end first. Push the lever down and rotate it back down (❶). Close the cover, pressing firmly on both front corners (❷).

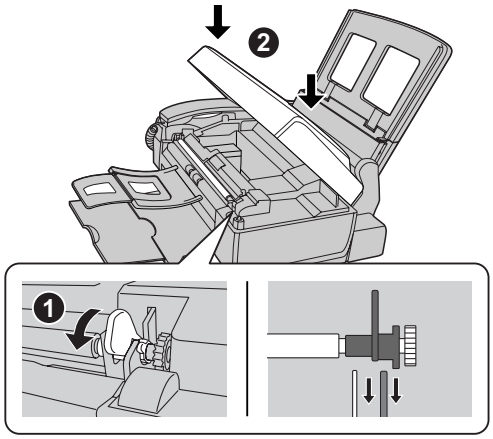

2. Clearing jammed printing paper

1) Open the cover (❶). Pull the jammed paper forward or backward out of the machine as appropriate (❷), taking care not to tear it.

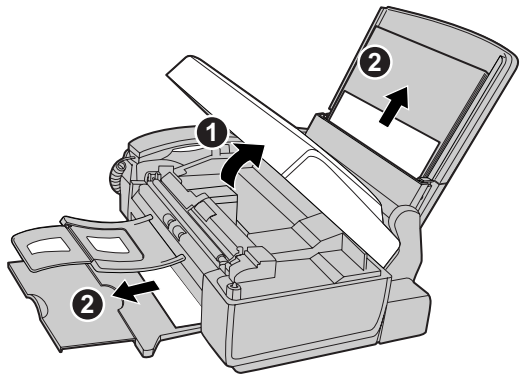

2) Close the cover, pressing down firmly on both front corners.

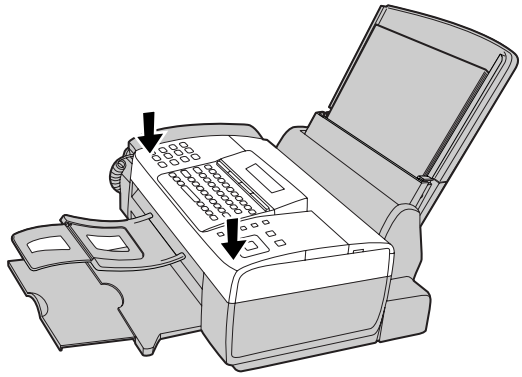

[8] Quick reference guide

1. Fax / Scan to E-mail Transmission

Place your document (up to 20 pages) face down in the document feeder.

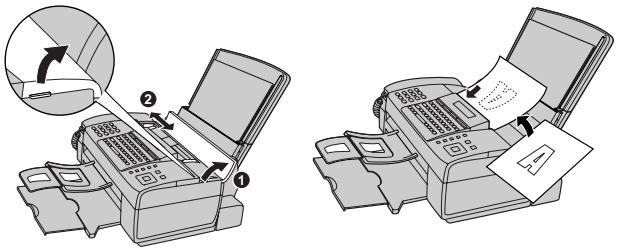

2. Sending a Fax by Normal Dialing

1. Lift the handset or press SPEAKER .
2. Dial the fax number.
3. Wait for the reception tone (if a person answers, ask them to press their Start key).
4. Press START/MEMORY .

3. Using a Rapid Key (fax/e-mail)

Press the Rapid Key for the destination.

4. Using a Speed Dial number (fax/e-mail)

1. Press SPEED DIAL .
2. Enter the appropriate 2-digit Speed Dial number and press START/MEMORY .

5. Searching for a destination (fax/e-mail)

1. Press or until the desired destination appears.
2. Press START/MEMORY .

6. Receiving Faxes

Press RESOLUTION/RECEPTION MODE until the desired reception mode appears in the display.

AUTO mode: The machine automatically answers and receives faxes.

MANUAL mode: Answer all calls (even faxes) by picking up the handset. To begin fax reception, press START/MEMORY .

TEL/FAX mode: The machine automatically answers and receives faxes. Voice calls are signalled by a special ringing sound.

7. Storing Destinations

1. Press FUNCTION , , then .
2. Press an unused Rapid Key, or press SPEED DIAL and enter an unused 2-digit Speed Dial number (01 to 63). (For an e-mail destination, you can also press the **A**, **B** or **C** key and go to Step 4.)
3. Press 1 for fax or 2 for e-mail.
4. Enter the fax number or the e-mail address.
5. Press START/MEMORY .
6. Enter a name with the letter keys.
7. Press START/MEMORY and then STOP .

CHAPTER 2. ADJUSTMENTS

[1] Adjustments

1. General description

Since the following adjustments and settings are provided for this model, make adjustments and/or setup as necessary.

2. Adjustments of output voltage (FACTORY ONLY)

1. Install the power supply unit in the machine.
2. Set the recording paper and document.
3. When the document is loaded, power is supplied to the output lines. Confirm that outputs are within the limits below.

2.1. Output voltage settings

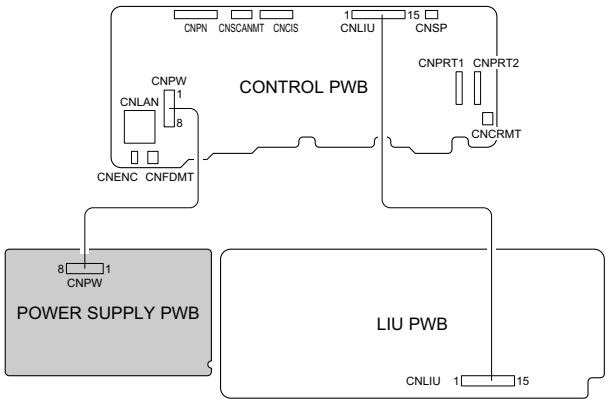

Output	Voltage limits
+5V	4.75 - 5.25V
+30V	27.0 - 33.0V

Pin No.	CNPW
1	+30V
2	+30V
3	MG
4	MG
5	DG
6	DG
7	+5V
8	+5V

3. IC protectors replacement

ICPs (IC Protectors) are installed to protect the CIS and Ope amp. circuit. ICPs protect various ICs and electronic circuits from an overcurrent condition.

The location of ICPs are shown below:

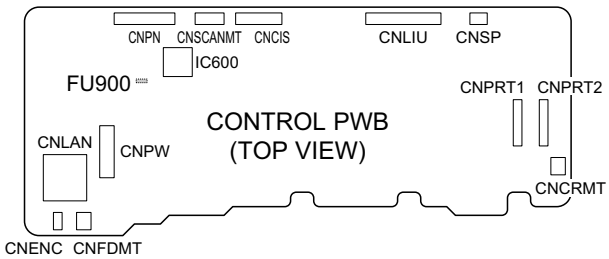

1) FU900 (KAB5002) is installed in order to protect overcurrent +24V supply. If FU900 is open, replace it with a new one.

4. Settings

4.1. Dial mode selector

DIAL mode (Soft Switch No. SW-9 Data No. 8)

Use this to set the fax machine to the type of telephone line you are on.

- The factory setting is “TONE”.

(step 1) Select "OPTION SETTING".

KEY : FUNCTION → ▼,▼,▼,▼

DISPLAY: OPTION SETTING | PRESS ▶KEY ▲▼

(step 2) Select "DIAL MODE".

KEY: ▶ ,▼,▼,▼,▼

DISPLAY: DIAL MODE
1: TONE, 2: PULSE

(step 3) Select, using "1" or "2".

KEY: 1

DISPLAY: TONE

KEY: 2

DISPLAY: PULSE

(step 4) End, using the "STOP" key.

(Press the STOP key three times.)

KEY: STOP

5. Volume adjustments

5.1. Speaker volume

1 Press SPEAKER .

2 Press ▲ or ▼ to select **HIGH, MIDDLE**, or **LOW.**

- Press SPEAKER again to turn off the speaker.

5.2. Ringer volume

1 Press ▲ or ▼ to select **HIGH, MIDDLE, LOW**, or **OFF.**

(Make sure SPEAKER has not been pressed, the handset is not lifted, and a document is not loaded in the feeder.)

- The ringer will ring once at the selected level.

2 If you selected "**OFF OK ?**" to turn off the ringer, press START/MEMORY .

[2] Diagnostics and service soft switch

1. Entering the diagnostic mode

Press FUNCTION → 9 → ⋇ → 8 → # → 7 , and the following display will appear alternately.

ROM:TF64 ⋇ ⋇: ROM version

Then press the START/MEMORY key.

Select the desired item with the UP key and the DOWN key or select with the rapid key.

Enter the mode with the START/MEMORY key.

(Diag・specifications)

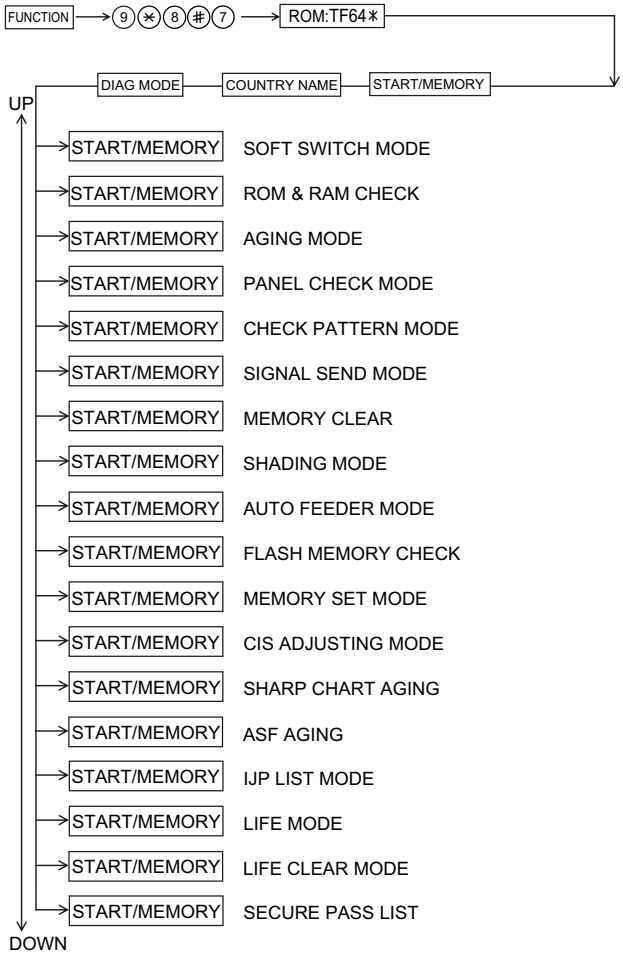

2. Diagnostic items description

2.1. SOFT SWITCH MODE

In this mode, the soft switches are set and the soft switch list is printed.

2.1.1 Operation

Soft switch mode screen

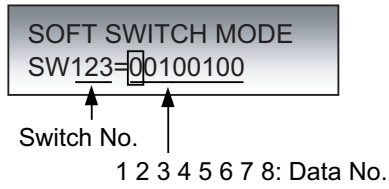

2.1.2 Switch number selection and data setting

1. Enter three digits of a soft switch number to set the switch number. Of a switch number of unexacting soft switch is entered, key error buzzer sounds to reject the input.

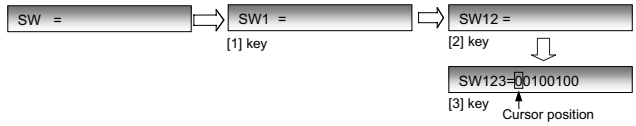

2. Press [START/MEMORY] key moves the cursor to the data number 1 of the former soft switch. If the switch number is the final, pressing [START/MEMORY] key will exit the soft switch mode.

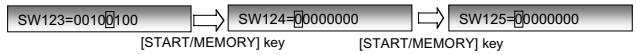

3. Data number selection

a) Pressing [>] or [#] key moves the cursor to the right. If the cursor is on data number 8, pressing [>] or [#] key shifts the cursor to data number 1 of the next switch number. If the switch number is the final, pressing [>] or [#] key will exit the soft switch mode.

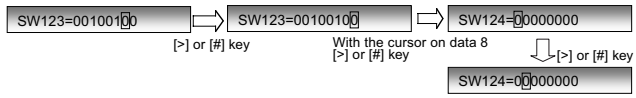

b) Pressing [<] or [⋇] key moves the cursor to the left. If the cursor is on data number 1, pressing [<] or [⋇] key shifts the cursor to data number 8 of the former switch number. If the switch number is 001, pressing [<] or [⋇] key do not move the cursor.

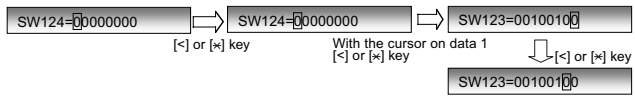

c) Pressing [UP] or [4] key moves the cursor to the data number 1 of the next soft switch. If the switch number is 001, pressing [UP] or [4] key shifts the cursor to data number 1.

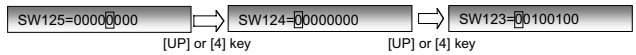

d) Pressing [DOWN] or [6] key moves the cursor to the data number 1 of the former soft switch. If the switch number is the final, pressing [down] or [6] key will exit the soft switch mode.

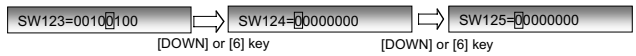

e) Pressing [8] key moves the cursor to the data number 1 of the 10th former soft switch.

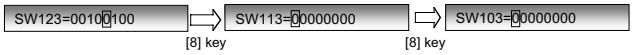

f) Pressing [2] key moves the cursor to the data number 1 of the 10th next soft switch.

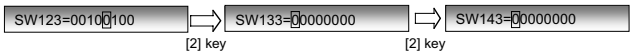

2.1.3 Data setting

Press the [1] key, and the data to the position of the cursor will be changed to 1.

Press the [0] key, and the data to the position of the cursor will be changed to 0.

2.1.4 Outputting method of soft switch list

In the soft switch mode, press [COPY/HELP] key, and the soft switch list will be printed.

2.1.5 Storage of data

In the following cases, the data if the soft switches set will be stored.

- It is shifted to set the next soft switch by pressing [START/MEMORY] key.
- If is shifted to set the former soft switch with the [<] or [UP] or [4] key.
- It is shifted to set the next soft switch with the [>] or [DOWN] or [6] key.
- If is shifted to set the 10th former soft switch with the [8] key.
- It is shifted to set the 10th next soft switch with the [2] key.

2.2. ROM & RAM check

To check the sum value of Firmware or RAM.

No.	Device		Alarm Buzzer	Remarks
1	Main	ROM (PROGRAM FLASH)	1 time <Short sound>	
2		SDRAM	3 times <Short sounds>	

2.2.1 Display

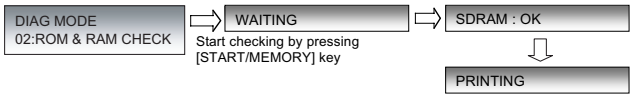

2.2.2 Result printing

After checking, the results print starts.

2.3. AGING MODE

A total of 10 sheets of check patterns are printed at 1-hour intervals.

This mode is exited when executed to the end (after 9 hours) or by pressing the [STOP] key.

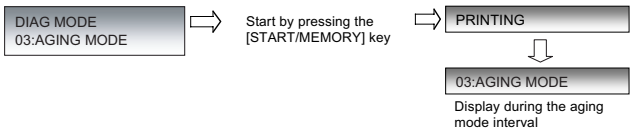

2.4. PANEL CHECK MODE

This is used to check whether each key is normally operated or not. After the test, the test result will be printed.

2.4.1 Flow

Press any key except [STOP] key. At this time, the name of each key will be displayed every push of the key.

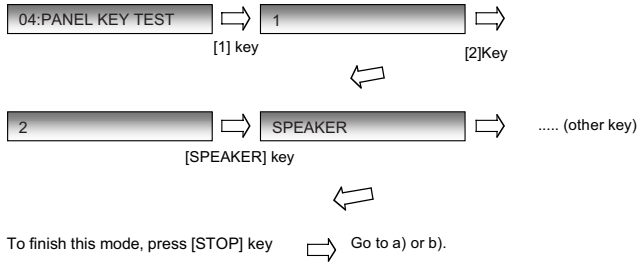

a) When all keys can be inputted, the following message will be displayed.

ALL KEY OK !!

Then the screen will be all displayed in black (refer to (2))and the test result will be printed.

b) If any key skipped, the following message will be displayed.

KEY ERROR !!

A key name that is not pressed yet is displayed so that this test can be continued.

At that time, pressing the [STOP] key will exit this mode. And the result will be printed.

2.4.2 Black screen

2.5. CHECK PATTERN MODE

Printing the pattern.

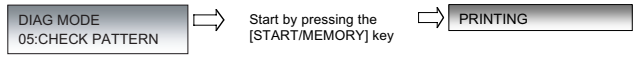

2.6. SIGNAL SEND MODE

The specified signals are transmitted in the following sequence to check the modem.

1. Press the [START/MEMORY] key, and no signals with the loop state starts.

[1] No signals (making the loop)
[2] 14400BPS (V.17)
[3] 12000BPS (V.17)
[4] 9600BPS (V.17)
[5] 7200BPS (V.17)
[6] 9600BPS (V.29)
[7] 7200BPS (V.29)
[8] 4800BPS (V.27ter)
[9] 2400BPS (V.27ter)
[10] 300BPS (FLAG)
[11] 2100Hz (CED)
[12] 1100Hz (CNG)

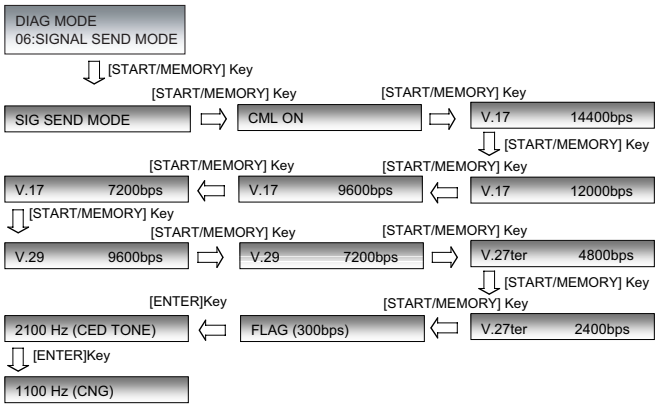

2. Pressing the [START/MEMORY] key during transmitting CNG signal, or pressing the [STOP] key will stop the output of signal and exit the mode.

2.7. MEMORY CLEAR

Clear the back-up memory including the soft switches, registration data. After executing this mode, the memory clear report is printed.

Note: The following data is not cleared. Values for Printer life including the adjusted value of printing void.

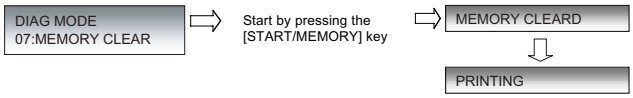

2.8. SHADING MODE

Shading waveforms are stored.

Set a shading sheet and press the [START/MEMORY] key to start shading.

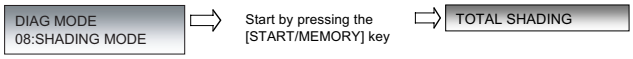

2.9. AUTO FEEDER MODE

Inserting and discharging the document can check the auto feeder.

1. The information of document sensor (A4 sensor) and ORG sensor is displayed when the documents are inserted to the Auto Feeder. Press the [START/MEMORY] key, and feeding documents is started.

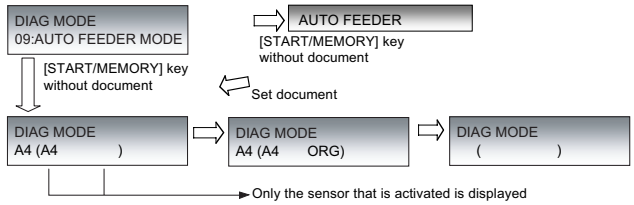

2. Press [STOP] key to exit the mode.

2.10. FLASH MEMORY CHECK

Read/write of the flash memory is checked.

The result is printed after completion of check.

Be sure to clear the memory after execution.

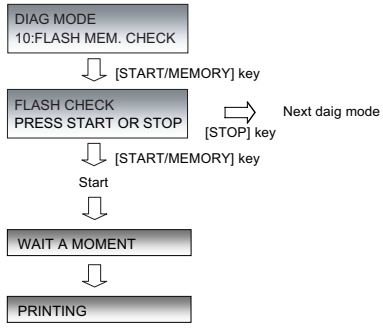

2.11. MEMORY SET MODE

It is possible to read or write the memory contents.

When 8 digits of physical address are entered, the data of that address is displayed.

When 2 digits of data are entered after entering 8 digits of address and a key is pressed, the contents can be rewritten.

Rewriting is enabled only in the range of addresses 00000000 to 007FFFFF.

If the memory is rewritten, the machine may malfunction.

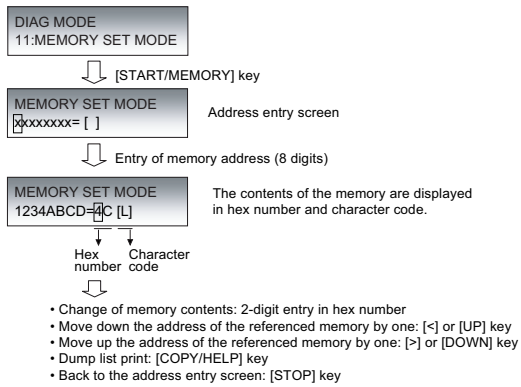

Press the [STOP] key on the address entry screen to exit the mode.

2.12. CIS ADJUSTING MODE

In this mode, the position of Scanner motor is moved from the home position up to the specified value. And document reading lamp is turned on.

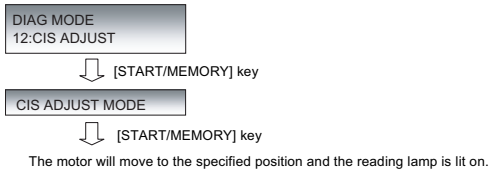

Press the [STOP] key to exit the mode.

2.13. SHARP CHART AGING

SHARP CHART is printed continuously.

Press the [STOP] key for interruption.

2.14. ASF AGING

The recording paper is fed continuously.

Press the [STOP] key for interruption.

2.15. IJP LIST MODE

Maintenance data of the printer is output.

MACHINE DOT COUNT	Machine total dot count
MACHINE PAGE COUNT	Machine total page count
CARTRIDGE DOT COUNT	Cartridge-by-cartridge dot count
IDLE MAINTENANCE COUNT	Maintenance information
INSTALL MAINTENANCE COUNT	Maintenance information
BEGIN OF JOB MAINTENANCE COUNT	Maintenance information
THRESHOLD MAINTENANCE COUNT	Maintenance information
POJ MAINTENANCE COUNT	Maintenance information
SWATH START TEMPERA-TURE	Temperature control information
FUSE MEMORY VALUE	Cartridge information
VPH ON TIME	Cartridge information
CARTRIDGE CHANGE COUNT	Cartridge replacement count
JAM COUNT	Jam count
NOZZLE CLEAN COUNT	Nozzle cleaning count
CALIBRATION ENVIRONMENT TEMPERATURE	Environmental temperature infor-mation
CALIBRATION PRINT HEAD TEMPERATURE	Cartridge temperature informa-tion
TEMPERATURE MODE	Temperature control information

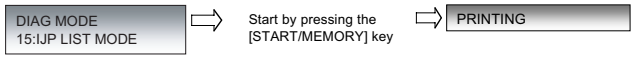

2.16. LIFE MODE

MACHINE PAGE COUNT is displayed.

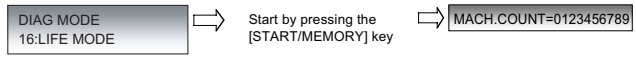

Press the [STOP] key to exit the mode.

- LIFE MODE can also be checked by the following operation.

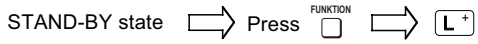

2.17. LIFE CLEAR MODE

MACHINE DOT COUNT and MACHINE PAGE COUNT are cleared.

2.18. SECURE PASS LIST

Print the SECURE PASS LIST.

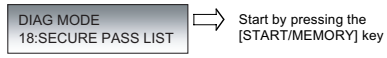

3. How to make soft switch setting

To enter the soft switch mode, press the following key entries in sequence.

Press [FUNCTION] [9] [*] [8] [#] [7] [START/MEMORY] [START/MEMORY] [0] [0] [1]

⇩

DATA No.	1	2	3	4	5	6	7	8
SW001 =	0	0	0	0	0	0	0	0
SW001 =	1	0	0	0	0	0	0	0
SW001 =	1	0	0	0	0	0	0	0
SW001 =	1	0	0	0	0	0	0	0
SW001 =	1	0	0	0	0	0	0	0
SW002 =	0	0	0	0	0	0	0	0
SW300 =	0	0	0	0	0	0	0	0

Press [1] or [0] key.

Press [#] or [<] key.

Press [*] or [>] key.

Bit1 - 8 are set.

Press [START/MEMORY] key during setting.

Soft SW002 - SW300 are set.

- To finish the settings halfway between SW001 and SW300, press the STOP key. In this case, the setting being done to the SW No. on display will be nullified while settings done to the preceding SW No. remain in effect.
- When the [COPY/HELP] key is pressed, the contents of soft switches are printed.

The soft switch mode is terminated.

4. Soft switch description

4.1. Soft switch

SW NO.	DATA NO.	ITEM	Switch setting and function						Initial setting	Remarks
			1			0				
SW 1	1	Reserved							0	
	2	Reserved							0	
	3	Receive mode		FAX	TEL	TEL/ FAX	FAX			
			No.3	0	0	1	1		0	
	4		No.4	0	1	0	1		0	
	5	Reserved							1	
	6	Reserved							0	
	7	Reserved							0	
	8	Reserved							0	
SW 2	1	Reserved							0	
	2	Forced 4800BPS reception	Yes			No			0	
	3	CED tone signal interval		75ms	500ms	750ms	1000ms			
			No.3	0	0	1	1		0	
	4		No.4	0	1	0	1		0	
	5	Reserved							0	
	6	Reserved							0	
	7	Reserved							0	
	8	Reserved							0	
SW 3	1	Length limitation of receive	No limit			Receive 1.5m			0	
	2	Footer print	Yes			No			0	
	3	Reserved							0	
	4	Reserved							0	
	5	Reserved							0	
	6	Reserved							0	
	7	CSI transmission	Not transmitted			Transmitted			0	
	8	Action when RTN is received	No communication error			Communication error			0	
SW 4	1	Reserved							1	
	2	Dial pausing (sec/pause)	4sec			2sec			0	
	3	Pulse format of D.P.	N+1			N			0	
	4	DIS receive acknowledgement during G3 transmission	Twice			NSF: Once DIS: Twice			0	
	5	Non-modulation carrier for V29 transmission mode	Yes			No			0	
	6	Reserved							0	
	7	Protocol monitor	Yes			No			0	
	8	Line monitor	Yes			No			0	
SW 5	1	Reserved							0	
	2	Reserved							0	
	3	Reserved							0	
	4	Reserved							0	
	5	Reserved							0	
	6	Reserved							0	
	7	Reserved							0	
	8	Reserved							0	
SW 6	1	Reserved							0	
	2	Reserved							0	
	3	Digital cable equalizer for Reception	Yes			No			0	
	4	Sender's information transmit	No			Yes			0	
	5	Reserved							1	
	6	Reserved							0	
	7	Reserved							0	
	8	Reserved							0	

SW NO.	DATA NO.	ITEM	Switch setting and function 1	Switch setting and function 0	Initial setting	Remarks
SW 7	1	H2 mode	No	Yes	0	
	2	Reserved			1	
	3	ECM mode	No	Yes	0	OPTION
	4	ECM MMR mode	No	Yes	0	
	5 6 7 8	Signal transmission level	Binary input No. = 8 4 2 1 5 6 7 8 (Data No.) EX 1 1 1 1 eg. -8dBm		1 1 1 1	
SW 8	1 2 3 4	Recall interval (FAX)	Binary input No. = 8 4 2 1 1 2 3 4 (Data No.) EX 0 1 0 1 eg. 5 minutes		0 1 0 1	Setting: N = 1 to 9
	5 6 7 8	Recall times (FAX)	Binary input No. = 8 4 2 1 5 6 7 8 (Data No.) EX 0 0 1 0 eg. 3 times		0 0 1 0	Setting: N = 1 to 9
SW 9	1	Reserved			0	
	2	Reserved			0	
	3	Reserved			0	
	4	Sort copy function	Yes	No	0	PRINT SETUP
	5	Reserved			0	
	6	Reserved			0	
	7	Reserved			0	
	8	Dial mode	Pulse	Tone	0	
SW 10	1	Reserved			1	
	2	Reserved			0	
	3	CNG detection	Yes	No	1	OPTION
	4	Number of CNG detection	3 pulses	2 pulses	0	
	5	Signal detect time in TEL/FAX mode	3sec	1sec	0	
	6	Reserved			0	
	7 8	CNG detection time after ringing	20sec / 10sec / 30sec / No limit No. 7: 0 0 1 1 No. 8: 0 1 0 1		0 0	
SW 11	1	Reserved			0	
	2	Reserved			1	
	3	Time display format	24hours	12hours-AM/PM	1	
	4	Date display format	Month-Day-Year	Day-Month-Year	0	
	5 6	Pseudo ringing time at TEL/FAX automatic switching mode	15sec / 30sec / 60sec / 120sec No. 5: 0 0 1 1 No. 6: 0 1 0 1		0 0	OPTION
	7	Reserved			0	
	8	CED detection time	500ms	1000ms	0	

SW NO.	DATA NO.	ITEM	Switch setting and function						Initial setting	Remarks
			1			0				
SW 12	1	MH fixed	Yes			No			0	
	2	Reserved							0	
	3	Reserved							0	
	4	Reserved							0	
	5	Reserved							0	
	6	Key tone	OFF			ON			0	OPTION
	7	Reserved							0	
	8	Reserved							0	
SW 13	1	Reserved							0	
	2	Reserved							0	
	3	Reserved							0	
	4	Reserved							0	
	5	Reserved							0	
	6	Reserved							0	
	7	Reserved							0	
	8	Reserved							0	
SW 14	1	Reserved							0	
	2	Reserved							0	
	3	Reserved							0	
	4	Reserved							0	
	5	Modem speed			No. 5	No.6	No. 7	No. 8	1	
	6		V.17 14400bps		1	0	0	0	0	
	7		V.17 12000bps		1	0	1	0	0	
	8		V.17 9600bps		1	0	0	1	0	
			V.17 7200bps		1	0	1	1		
			V.29 9600bps		0	0	0	1		
			V.29 7200bps		0	0	1	1		
			V.27ter 4800bps		0	0	1	0		
			V.27ter 2400bps		0	0	0	0		
SW 15	1	Reserved							0	
	2	Reserved							0	
	3	Reserved							0	
	4	Reserved							1	
	5	Reserved							1	
	6	Reserved							0	
	7	Reserved							0	
	8	Reserved							1	
SW 16	1	Digital cable equalizer for transmission	Yes			No			0	
	2	Reserved							0	
	3	Reserved							0	
	4	Flash send time	Long time			Short time			0	OPTION
	5	Flash short time		90ms	100ms	110ms	125ms		0	
	6		No. 5	0	0	1	1		0	
			No. 6	0	1	0	1			
	7	Flash long time		250ms	230ms	270ms	280ms		0	
	8		No. 7	0	0	1	1		0	
			No. 8	0	1	0	1			
SW 17	1	Reserved							0	
	2	Reserved							1	
	3	Reserved							0	
	4	Reserved							0	
	5	Reserved							0	
	6	Reserved							1	
	7	Reserved							0	
	8	Reserved							0	

SW NO.	DATA NO.	ITEM	Switch setting and function						Initial setting	Remarks
			1			0				
SW 18	1	Reserved							0	
	2	Reserved							0	
	3	Reserved							0	
	4	Reserved							0	
	5	Reserved							0	
	6	Reserved							0	
	7	Reserved							0	
	8	Reserved							0	
SW 19	1	Reserved							1	
	2	Reserved							0	
	3	Reserved							0	
	4	Reserved							0	
	5	Reserved							0	
	6	Reserved							1	
	7	Reserved							0	
	8	Reserved							0	
SW 20	1	Reserved							0	
	2	Reserved							1	
	3	Reserved							0	
	4	Reserved							1	
	5	Reserved							1	
	6	Reserved							0	
	7	Reserved							0	
	8	Reserved							0	
SW 21		Line density selection		STAN-DARD	FINE	S-FINE	STAN-DARD			OPTION (Only for Standard/Fine)
	1		No. 1	0	0	1	1		0	
	2		No. 2	0	1	0	1		0	
		Communication results printout		Error Only	Error/ Memory	Send only	No Print	Always		OPTION
	3		No. 3	0	0	0	1	1	0	
	4		No. 4	0	0	1	0	1	0	
	5		No. 5	1	0	0	0	0	1	
	6	Caller ID function	Yes			No			0	OPTION
	7	Activity report print	Yes (When memory full)			No (First data is cleared when memory full)			0	OPTION
	8	Day Light Saving (Summer time)	No			Yes			1	
SW 22	1	Activate Receive Fax to E-mail	Yes			No			0	
	2	Print setting of received fax for Receive Fax to E-mail	Print at error			Always Print			0	
	3	Report setting for Receive Fax to E-mail	Print at error			Always Print			1	
	4	Activate Secure Receive	Yes			No			0	
	5	Reserved							0	
	6	Reserved							0	
	7	Reserved							0	
	8	Reserved							0	
SW 23	1	Ink Save Mode Setting	ON			OFF			0	PRINT SETUP
	2	Receive Reduce Setting	100%			Auto			0	PRINT SETUP
		Paper Size		LET-TER	A4	LEGAL	LET-TER			(Only for A4)
	3		No. 3	0	0	1	1		0	
	4		No. 4	0	1	0	1		1	
	5	Half tone copy print swath direction	Single direction printing			Both direction printing			1	PRINT SETUP
	6	Reserved							0	
	7	Reserved							0	
	8	Reserved							0	

SW NO.	DATA NO.	ITEM	Switch setting and function		Initial setting	Remarks
			1	0		
SW 24	1	Reserved			0	
	2	Reserved			0	
	3	Reserved			0	
	4	Reserved			0	
	5	Reserved			0	
	6	Reserved			0	
	7	Reserved			0	
	8	Reserved			0	
SW 25	1	Reserved			0	
	2	Reserved			0	
	3	Reserved			0	
	4	Reserved			0	
	5	Reserved			1	
	6	Reserved			0	
	7	Reserved			0	
	8	Reserved			1	
SW 26	1	Reserved			0	
	2	Reserved			0	
	3	Reserved			0	
	4	Reserved			0	
	5	Reserved			0	
	6	Reserved			0	
	7	Reserved			0	
	8	Reserved			0	
SW 27	1	Reserved			0	
	2	Reserved			0	
	3	Reserved			0	
	4	Reserved			0	
	5	Reserved			0	
	6	Reserved			0	
	7	Reserved			0	
	8	Reserved			0	
SW 28	1	Reserved			0	
	2	Reserved			0	
	3	Reserved			0	
	4	Reserved			0	
	5	Reserved			1	
	6	Reserved			0	
	7	Reserved			0	
	8	Reserved			1	
SW 29	1	Reserved			0	
	2	Reserved			0	
	3	Reserved			0	
	4	Reserved			0	
	5	Reserved			0	
	6	Reserved			0	
	7	Reserved			0	
	8	Reserved			0	
SW 30	1	Reserved			0	
	2	Reserved			1	
	3	Reserved			0	
	4	Reserved			0	
	5	Reserved			0	
	6	Reserved			0	
	7	Reserved			0	
	8	Reserved			0	

SW NO.	DATA NO.	ITEM	Switch setting and function						Initial setting	Remarks
			1			0				
SW 31	1	Reserved							0	
	2	Reserved							0	
	3	Reserved							0	
	4	Reserved							0	
	5	Reserved							0	
	6	Reserved							0	
	7	Reserved							0	
	8	Reserved							0	
SW 32	1	Reserved							0	
	2	Reserved							0	
	3	Reserved							0	
	4	Error criterion	10-20%			5-10%			0	
	5	EOL (End of Line) detection timer		13sec	25sec	5sec				
			No. 5	0	0	1			0	
	6		No. 6	0	1	0			0	
	7	Reserved							0	
	8	Reserved							0	
SW 33	1	Reserved							0	
	2	Reserved							0	
	3	Reserved							0	
	4	Reserved							0	
	5	Reserved							0	
	6	Reserved							0	
	7	Reserved							0	
	8	Reserved							0	
SW 34	1	Reserved							0	
	2	Reserved							0	
	3	Reserved							0	
	4	Reserved							0	
	5	Reserved							0	
	6	Reserved							0	
	7	Reserved							0	
	8	Reserved							0	
SW 35	1	Reserved							0	
	2	Reserved							0	
	3	Reserved							0	
	4	Reserved							0	
	5	Reserved							0	
	6	Reserved							0	
	7	Reserved							0	
	8	Reserved							0	
SW 36	1	Reserved							0	
	2	Reserved							0	
	3	Reserved							0	
	4	Reserved							0	
	5	Reserved							0	
	6	Reserved							0	
	7	Reserved							0	
	8	Reserved							0	
SW 37	1	Reserved							0	
	2	Reserved							0	
	3	Reserved							0	
	4	Reserved							0	
	5	Reserved							0	
	6	Reserved							0	
	7	Reserved							0	
	8	Reserved							0	

SW NO.	DATA NO.	ITEM	Switch setting and function 1	Switch setting and function 0	Initial setting	Remarks
SW 38	1	Reserved			0	
	2	Reserved			0	
	3	Reserved			0	
	4	Reserved			0	
	5	Reserved			0	
	6	Reserved			0	
	7	Reserved			0	
	8	Reserved			0	
SW 39	1	Reserved			0	
	2	Reserved			1	
	3	Reserved			1	
	4	Reserved			0	
	5	Reserved			0	
	6	Reserved			0	
	7	Make/Break ratio in D.P.	40/60	33/67	0	
	8	Pre pause time in D.P.	320ms	50ms	0	
SW 40		Inter digit pause time				
			No. 1 / No. 2 / No. 3			
			800ms: 0 / 0 / 0			
			840ms: 0 / 0 / 1			
			880ms: 0 / 1 / 0			
			900ms: 0 / 1 / 1			
			1000ms: 1 / 0 / 0			
	1		Not used: 1 / 0 / 1		0	
	2		Not used: 1 / 1 / 0		0	
	3		Not used: 1 / 1 / 1		0	
	4	Change to PB from PB by ✕ key	Yes	No	1	
	5	Reserved			0	
	6	Reserved			0	
	7	Reserved			0	
	8	Reserved			0	
SW 41		DTMF detect time				
			50ms / 80ms / 100ms / 120ms			
	1		No. 1: 0 / 0 / 1 / 1		0	
	2		No. 2: 0 / 1 / 0 / 1		0	
	3	Protection of remote reception (5 ✕✕) detect	Yes	No	0	
	4	Remote operation code figure by external TEL(0-9)	Binary input No. = 8 4 2 1 4 5 6 7 (Data No.) EX 0 1 0 1 eg. Remote operation code is set "5 ✕✕"		0	OPTION
	5				1	
	6				0	
	7				1	
	8	Reserved			0	
SW 42	1	Reserved			0	
	2	Reserved			1	
	3	Reserved			1	
	4	Reserved			0	
	5	Reserved			0	
	6	Reserved			0	
	7	Reserved			0	
	8	Reserved			0	
SW 43	1	Reserved			0	
	2	Reserved			0	
	3	Reserved			0	
	4	Reserved			0	
	5	Reserved			0	
	6	Reserved			0	
	7	Reserved			0	
	8	Reserved			0	

SW NO.	DATA NO.	ITEM	Switch setting and function		Initial setting	Remarks
			1	0		
SW 44	1	Reserved			1	
	2	Reserved			0	
	3	Reserved			0	
	4	Reserved			0	
	5	Reserved			0	
	6	Reserved			0	
	7	Reserved			0	
	8	Reserved			0	
SW 45	1	Reserved			0	
	2	Reserved			0	
	3	Reserved			0	
	4	Reserved			0	
	5	Reserved			0	
	6	Reserved			0	
	7	Reserved			0	
	8	Reserved			0	
SW 46	1	Reserved			0	
	2	Reserved			0	
	3	Reserved			0	
	4	Reserved			0	
	5	Reserved			0	
	6	Reserved			0	
	7	Reserved			0	
	8	Reserved			0	
SW 47	1	Reserved			0	
	2	Reserved			0	
	3	Reserved			0	
	4	Reserved			0	
	5	Reserved			0	
	6	Reserved			0	
	7	Reserved			0	
	8	Reserved			0	
SW 48	1	Reserved			0	
	2	Reserved			0	
	3	Reserved			1	
	4	Reserved			0	
	5	Reserved			0	
	6	Reserved			1	
	7	Reserved			1	
	8	Reserved			0	
SW 49	1	Reserved			0	
	2	Reserved			0	
	3	Reserved			0	
	4	Reserved			0	
	5	Reserved			0	
	6	Reserved			0	
	7	Reserved			0	
	8	Reserved			0	
SW 50	1	Reserved			0	
	2	Reserved			0	
	3	Reserved			0	
	4	Reserved			0	
	5	Reserved			0	
	6	Reserved			0	
	7	Reserved			0	
	8	Reserved			0	

SW NO.	DATA NO.	ITEM	Switch setting and function		Initial setting	Remarks
			1	0		
SW 51	1	Reserved			0	
	2	Reserved			0	
	3	Reserved			0	
	4	Reserved			0	
	5	Reserved			0	
	6	Busy tone detect when TEL/FAX mode	No	Yes	0	
	7	Dial tone detect when TEL/FAX mode	No	Yes	0	
	8	Reserved			0	
SW 52	1	Reserved			0	
	2	Reserved			0	
	3	Reserved			0	
	4	Reserved			0	
	5	Reserved			1	
	6	Reserved			0	
	7	Reserved			0	
	8	Reserved			0	
SW 53	1	Reserved			1	
	2	Reserved			0	
	3	Reserved			1	
	4	Reserved			0	
	5	Reserved			0	
	6	Reserved			0	
	7	Reserved			0	
	8	Reserved			1	
SW 54	1	Reserved			0	
	2	Reserved			0	
	3	Reserved			0	
	4	Reserved			1	
	5	Reserved			0	
	6	Reserved			1	
	7	Reserved			0	
	8	Reserved			0	
SW 55	1	Reserved			0	
	2	Reserved			1	
	3	Reserved			0	
	4	Reserved			1	
	5	Reserved			0	
	6	Reserved			1	
	7	Reserved			0	
	8	Reserved			1	
SW 56	1	Reserved			0	
	2	Reserved			1	
	3	Reserved			0	
	4	Reserved			0	
	5	Reserved			1	
	6	Reserved			0	
	7	Reserved			0	
	8	Reserved			0	
SW 57	1	Reserved			0	
	2	Reserved			0	
	3	Reserved			0	
	4	Reserved			0	
	5	Reserved			0	
	6	Reserved			0	
	7	Reserved			0	
	8	Reserved			0	

SW NO.	DATA NO.	ITEM	Switch setting and function						Initial setting	Remarks
			1			0				
SW 58	1	Reserved							0	
	2	Reserved							0	
	3	Reserved							0	
	4	Reserved							0	
	5	Reserved							0	
	6	Reserved							0	
	7	Reserved							0	
	8	Reserved							0	
SW 59	1	Reserved							0	
	2	Reserved							0	
	3	Reserved							0	
	4	Reserved							0	
	5	Reserved							0	
	6	Reserved							0	
	7	Reserved							0	
	8	Reserved							0	
SW 60	1	Reserved							0	
	2	Reserved							0	
	3	Reserved							1	
	4	Reserved							0	
	5	Reserved							0	
	6	Reserved							1	
	7	Reserved							0	
	8	Reserved							0	
SW 61	1	Reserved							1	
	2	Reserved							1	
	3 4	Ringer Volume		OFF	LOW	MIDDLE	HIGH			
			No. 3	0	0	1	1		0	
			No. 4	0	1	0	1		1	
	5 6	Speaker Volume		LOW	LOW	MIDDLE	HIGH			
			No. 5	0	0	1	1		0	
			No. 6	0	1	0	1		1	
	7	Reserved							1	
	8	Reserved							0	
SW 62	1	Reserved							0	
	2	Reserved							1	
	3	Reserved							1	
	4	Reserved							0	
	5	Reserved							1	
	6	Reserved							1	
	7	Reserved							0	
	8	Reserved							0	
SW 63	1	Reserved							0	
	2	Reserved							1	
	3	Reserved							0	
	4	Reserved							0	
	5	Reserved							1	
	6	Reserved							0	
	7	Reserved							0	
	8	Reserved							0	
SW 64	1	Reserved							0	
	2	Reserved							1	
	3	Reserved							0	
	4	Reserved							1	
	5	Reserved							0	
	6	Reserved							0	
	7	Reserved							1	
	8	Reserved							0	

SW NO.	DATA NO.	ITEM	Switch setting and function		Initial setting	Remarks
			1	0		
SW 65	1	Reserved			0	
	2	Reserved			1	
	3	Reserved			1	
	4	Reserved			0	
	5	Reserved			0	
	6	Reserved			1	
	7	Reserved			0	
	8	Reserved			0	
SW 66	1	Reserved			0	
	2	Reserved			1	
	3	Reserved			1	
	4	Reserved			0	
	5	Reserved			1	
	6	Reserved			0	
	7	Reserved			0	
	8	Reserved			0	
SW 67	1	Reserved			0	
	2	Reserved			0	
	3	Reserved			0	
	4	Reserved			0	
	5	Reserved			0	
	6	Reserved			0	
	7	Reserved			0	
	8	Reserved			0	
SW 68	1	Reserved			0	
	2	Reserved			0	
	3	Reserved			0	
	4	Reserved			0	
	5	Reserved			0	
	6	Reserved			0	
	7	Reserved			0	
	8	Reserved			0	
SW 69	1	Reserved			0	
	2	Reserved			0	
	3	Reserved			0	
	4	Reserved			0	
	5	Reserved			0	
	6	Reserved			0	
	7	Reserved			0	
	8	Reserved			0	
SW 70	1	Reserved			0	
	2	Reserved			0	
	3	Reserved			1	
	4	Reserved			0	
	5	Reserved			1	
	6	Reserved			0	
	7	Reserved			0	
	8	Reserved			0	
SW 71	1	Reserved			1	
	2	Reserved			0	
	3	Reserved			1	
	4	Reserved			1	
	5	Reserved			0	
	6	Reserved			0	
	7	Reserved			0	
	8	Reserved			0	

SW NO.	DATA NO.	ITEM	Switch setting and function		Initial setting	Remarks
			1	0		
SW 72	1	Reserved			0	
	2	Reserved			0	
	3	Reserved			1	
	4	Reserved			0	
	5	Reserved			1	
	6	Reserved			1	
	7	Reserved			1	
	8	Reserved			0	
SW 73	1	Reserved			0	
	2	Reserved			0	
	3	Reserved			0	
	4	Reserved			1	
	5	Reserved			0	
	6	Reserved			0	
	7	Reserved			0	
	8	Reserved			0	
SW 74	1	Reserved			0	
	2	Reserved			0	
	3	Reserved			0	
	4	Reserved			0	
	5	Reserved			0	
	6	Reserved			1	
	7	Reserved			0	
	8	Reserved			0	
SW 75	1	Reserved			1	
	2	Reserved			1	
	3	Reserved			0	
	4	Reserved			0	
	5	Reserved			0	
	6	Reserved			1	
	7	Reserved			0	
	8	Reserved			0	
SW 76	1	Reserved			0	
	2	Reserved			0	
	3	Reserved			0	
	4	Reserved			0	
	5	Reserved			0	
	6	Reserved			1	
	7	Reserved			0	
	8	Reserved			0	
SW 77	1	Reserved			0	
	2	Reserved			0	
	3	Reserved			1	
	4	Reserved			1	
	5	Reserved			0	
	6	Reserved			0	
	7	Reserved			0	
	8	Reserved			0	
SW 78	1	Reserved			1	
	2	Reserved			0	
	3	Reserved			0	
	4	Reserved			1	
	5	Reserved			0	
	6	Reserved			1	
	7	Reserved			0	
	8	Reserved			0	

SW NO.	DATA NO.	ITEM	Switch setting and function		Initial setting	Remarks
			1	0		
SW 79	1	Reserved			0	
	2	Reserved			0	
	3	Reserved			0	
	4	Reserved			1	
	5	Reserved			0	
	6	Reserved			0	
	7	Reserved			1	
	8	Reserved			0	
SW 80	1	Reserved			0	
	2	Reserved			0	
	3	Reserved			0	
	4	Reserved			0	
	5	Reserved			0	
	6	Reserved			0	
	7	Reserved			0	
	8	Reserved			0	
SW 81	1	Reserved			1	
	2	Reserved			1	
	3	Reserved			1	
	4	Reserved			0	
	5	Reserved			0	
	6	Reserved			0	
	7	Reserved			0	
	8	Reserved			0	
SW 82	1	Reserved			0	
	2	Reserved			0	
	3	Reserved			1	
	4	Reserved			0	
	5	Reserved			0	
	6	Reserved			0	
	7	Reserved			1	
	8	Reserved			1	
SW 83	1	Reserved			0	
	2	Reserved			0	
	3	Reserved			0	
	4	Reserved			0	
	5	Reserved			0	
	6	Reserved			0	
	7	Reserved			0	
	8	Reserved			0	
SW 84	1	Reserved			0	
	2	Reserved			0	
	3	Reserved			0	
	4	Reserved			0	
	5	Reserved			0	
	6	Reserved			0	
	7	Reserved			0	
	8	Reserved			0	
SW 85	1	Reserved			0	
	2	Reserved			0	
	3	Reserved			0	
	4	Reserved			0	
	5	Reserved			0	
	6	Reserved			0	
	7	Reserved			0	
	8	Reserved			0	

SW NO.	DATA NO.	ITEM	Switch setting and function		Initial setting	Remarks
			1	0		
SW 86	1	Reserved			0	
	2	Reserved			0	
	3	Reserved			0	
	4	Reserved			1	
	5	Reserved			0	
	6	Reserved			0	
	7	Reserved			1	
	8	Reserved			1	
SW 87	1	Reserved			0	
	2	Reserved			0	
	3	Reserved			0	
	4	Reserved			0	
	5	Reserved			0	
	6	Reserved			0	
	7	Reserved			0	
	8	Reserved			0	
SW 88	1	Reserved			0	
	2	Reserved			0	
	3	Reserved			1	
	4	Reserved			0	
	5	Reserved			1	
	6	Reserved			0	
	7	Reserved			1	
	8	Reserved			0	
SW 89	1	Reserved			0	
	2	Reserved			1	
	3	Reserved			1	
	4	Reserved			0	
	5	Reserved			0	
	6	Reserved			0	
	7	Reserved			0	
	8	Reserved			0	
SW 90	1	Reserved			0	
	2	Reserved			0	
	3	Reserved			0	
	4	Reserved			0	
	5	Reserved			0	
	6	Reserved			0	
	7	Reserved			0	
	8	Reserved			0	
SW 91	1	Reserved			0	
	2	Reserved			0	
	3	Reserved			0	
	4	Reserved			0	
	5	Reserved			0	
	6	Reserved			0	
	7	Reserved			0	
	8	Reserved			0	
SW 92	1	Reserved			0	
	2	Reserved			0	
	3	Reserved			0	
	4	Reserved			0	
	5	Reserved			0	
	6	Reserved			0	
	7	Reserved			0	
	8	Reserved			0	

SW NO.	DATA NO.	ITEM	Switch setting and function		Initial setting	Remarks
			1	0		
SW 93	1	Reserved			0	
	2	Reserved			0	
	3	Reserved			0	
	4	Reserved			0	
	5	Reserved			0	
	6	Reserved			0	
	7	Reserved			0	
	8	Reserved			0	
SW 94	1	Reserved			0	
	2	Reserved			1	
	3	Reserved			0	
	4	Reserved			0	
	5	Reserved			1	
	6	Reserved			0	
	7	Reserved			0	
	8	Reserved			0	
SW 95	1	Reserved			0	
	2	Reserved			1	
	3	Reserved			0	
	4	Reserved			0	
	5	Reserved			1	
	6	Reserved			1	
	7	Reserved			0	
	8	Reserved			0	
SW 96	1	Reserved			0	
	2	Reserved			0	
	3	Reserved			0	
	4	Reserved			0	
	5	Reserved			0	
	6	Reserved			1	
	7	Reserved			0	
	8	Reserved			0	
SW 97	1	Reserved			0	
	2	Reserved			0	
	3	Reserved			0	
	4	Reserved			0	
	5	Reserved			0	
	6	Reserved			0	
	7	Reserved			0	
	8	Reserved			0	
SW 98	1	Reserved			0	
	2	Reserved			0	
	3	Reserved			0	
	4	Reserved			1	
	5	Reserved			1	
	6	Reserved			0	
	7	Reserved			0	
	8	Reserved			1	
SW 99	1	Reserved			0	
	2	Reserved			1	
	3	Reserved			0	
	4	Reserved			0	
	5	Reserved			0	
	6	Reserved			0	
	7	Reserved			0	
	8	Reserved			0	

SW NO.	DATA NO.	ITEM	Switch setting and function		Initial setting	Remarks
			1	0		
SW 100	1	Reserved			1	
	2	Reserved			1	
	3	Reserved			1	
	4	Reserved			1	
	5	Reserved			1	
	6	Reserved			0	
	7	Reserved			0	
	8	Reserved			0	
SW 101	1	Reserved			0	
	2	Reserved			0	
	3	Reserved			0	
	4	Reserved			0	
	5	Reserved			0	
	6	Reserved			0	
	7	Reserved			0	
	8	Reserved			0	
SW 102	1	Reserved			0	
	2	Reserved			0	
	3	Reserved			0	
	4	Reserved			0	
	5	Reserved			0	
	6	Reserved			0	
	7	Reserved			0	
	8	Reserved			0	
SW 103	1	Reserved			0	
	2	Reserved			0	
	3	Reserved			0	
	4	Reserved			0	
	5	Reserved			0	
	6	Reserved			0	
	7	Reserved			0	
	8	Reserved			0	
SW 104	1	Reserved			0	
	2	Reserved			0	
	3	Reserved			0	
	4	Reserved			0	
	5	Reserved			0	
	6	Reserved			0	
	7	Reserved			0	
	8	Reserved			0	
SW 105	1	Reserved			0	
	2	Reserved			0	
	3	Reserved			0	
	4	Reserved			0	
	5	Reserved			0	
	6	Reserved			0	
	7	Reserved			0	
	8	Reserved			0	
SW 106	1	Reserved			0	
	2	Reserved			0	
	3	Reserved			0	
	4	Reserved			0	
	5	Reserved			0	
	6	Reserved			0	
	7	Reserved			0	
	8	Reserved			0	

SW NO.	DATA NO.	ITEM	Switch setting and function 1	Switch setting and function 0	Initial setting	Remarks
SW 107	1	Reserved			0	
	2	Reserved			0	
	3	Reserved			0	
	4	Reserved			0	
	5	Reserved			0	
	6	Reserved			0	
	7	Reserved			0	
	8	Reserved			0	
SW 108	1	Reserved			1	
	2	Reserved			0	
	3	Reserved			0	
	4	Reserved			1	
	5	Reserved			0	
	6	Reserved			0	
	7	Reserved			0	
	8	Reserved			0	
SW 109	1	Reserved			0	
	2	Reserved			1	
	3	Reserved			1	
	4	Reserved			0	
	5	Reserved			0	
	6	Reserved			0	
	7	Reserved			0	
	8	Reserved			0	
SW 110	1 2 3	Connect configuration for LAN controller			1 0 1	
			No. 1 / No. 2 / No. 3			
			Default (Auto): 0 / 0 / 0			
			Full duplex 100M: 0 / 0 / 1			
			Full duplex 10M: 0 / 1 / 0			
			Auto: 0 / 1 / 1			
			Half duplex 100M: 1 / 0 / 0			
			Half duplex 10M: 1 / 0 / 1			
	4	Reserved			0	
	5	Reserved			0	
	6	Reserved			0	
	7	Reserved			0	
	8	Reserved			0	
SW 111	1 2 3 4	Detect time of LAN link ON	Binary input No. = 8 4 2 1 1 2 3 4 (Data No.) EX 0 1 0 0 = 4seconds Note: "0 0 0 0" = 1 second		0 0 0 0	1 - 15 seconds
	5 6 7 8	Detect time of LAN link OFF	Binary input No. = 8 4 2 1 5 6 7 8 (Data No.) EX 0 1 0 0 = 4seconds Note: "0 0 0 0" = 1 second		0 0 0 0	1 - 15 seconds

SW NO.	DATA NO.	ITEM	Switch setting and function						Initial setting	Remarks
			1			0				
SW 112	1	Default file format for network scan	PDF			TIFF			0	Network setting
		Default resolution for network scan		Stan-dard	Fine	S-Fine				Network setting
	2		No. 2	0	0	1			0	
	3		No. 3	0	1	0			1	
	4	Reserved							0	
	5	Reserved							0	
	6	Reserved							0	
	7	Reserved							0	
	8	SMTP authentication type	All of GEMINI's support type			Confirm server support type			0	Only when SMTP-auth supported
SW 113	1	Reserved							0	
	2	Reserved							0	
	3	Reserved							0	
	4	Reserved							0	
	5	Reserved							0	
	6	Reserved							0	
	7	Reserved							0	
	8	Reserved							0	
SW 114		DTMF output level (High)	Binary input No. = 16 8 4 2 1 1 2 3 4 5 (Data No.) EX 1 0 0 1 1 eg. Signal transmission level is set to -10dBm							
	1								1	
	2								0	
	3								0	
	4								1	
	5								1	
	6	Reserved							0	
	7	Reserved							0	
	8	Reserved							0	
SW 115		DTMF output level (Low)	Binary input No. = 16 8 4 2 1 1 2 3 4 5 (Data No.) EX 1 0 1 1 0 eg. Signal transmission level is set to -10dBm							
	1								1	
	2								0	
	3								1	
	4								1	
	5								0	
	6	Reserved							0	
	7	Reserved							0	
	8	Reserved							0	
SW 116		Dial tone detection frequency		No. 1	No. 2	No. 3				
			280 - 520Hz	0	0	0				
			380 - 500Hz	0	0	1				
			300 - 600Hz	1	0	0				
			Reserved	0	1	0				
			Reserved	0	1	1				
	1		Reserved	1	0	1			0	
	2		Reserved	1	1	0			0	
	3		Reserved	1	1	1			1	
		Busy tone detection frequency		No. 1	No. 2					
			520 - 640Hz	0	0					
			300 - 600Hz	0	1					
	4		380 - 500Hz	1	0				1	
	5		520 - 640Hz	1	1				0	
	6	Reserved							0	
	7	Reserved							0	
	8	Reserved							1	

SW NO.	DATA NO.	ITEM	Switch setting and function					Initial setting	Remarks
			1		0				
SW 117	1 2 3 4	Number of rings for auto-receive (0:No ring receive)	Binary input No. = 8 4 2 1 1 2 3 4 (Data No.) EX 0 0 1 0 eg. Number of rings for auto receive is set to 4.					0 0 1 0	OPTION Setting: N = 1 to 9
	5 6 7 8	Distinctive ringing		ON	OFF			0 0 0 0	
			No. 5	0	0				
			No. 6	0	0				
			No. 7	0	0				
			No. 8	1	0				
SW 118	1	Reserved						0	
	2	Reserved						0	
	3	Reserved						0	
	4	Reserved						0	
	5	Reserved						0	
	6	Reserved						0	
	7	Reserved						0	
	8	Reserved						0	
SW 119	1	Reserved						0	
	2	Reserved						0	
	3	Reserved						0	
	4 5 6	CI signal min. off time		No. 4	No. 5	No. 6		1 0 1	
			200ms	0	0	0			
			300ms	0	0	1			
			350ms	0	1	0			
			400ms	0	1	1			
			500ms	1	0	0			
			700ms	1	0	1			
			1200ms	1	1	0			
			Not used	1	1	1			
	7	Reserved						0	
	8	Reserved						0	
SW 120	1	Reserved						0	
	2	Reserved						0	
	3	Reserved						0	
	4	Reserved						1	
	5 6 7 8	CI Signal Frequency		No. 5	No. 6	No. 7	No. 8	0 0 0 0	
			11.6-76.9Hz	0	0	0	0		
			14.0-76.9Hz	0	0	0	1		
			14.5-76.9Hz	0	0	1	0		
			15.5-76.9Hz	0	0	1	1		
			20.0-58.8Hz	0	1	0	0		
			20.0-66.6Hz	0	1	0	1		
			19.6-76.9Hz	0	1	1	0		
			25.0-58.8Hz	0	1	1	1		
			35.0-76.9Hz	1	0	0	0		
SW 121	1	Reserved						0	
	2	Reserved						0	
	3	Reserved						0	
	4	Reserved						0	
	5	Reserved						0	
	6	Reserved						0	
	7	Reserved						0	
	8	Reserved						0	

SW NO.	DATA NO.	ITEM	Switch setting and function		Initial setting	Remarks
			1	0		
SW 122	1	Reserved			1	
	2	Reserved			0	
	3	Reserved			0	
	4	Reserved			1	
	5	Reserved			1	
	6	Reserved			0	
	7	Reserved			1	
	8	Reserved			0	
SW 123	1	Reserved			1	
	2	Reserved			0	
	3	Reserved			0	
	4	Reserved			1	
	5	Reserved			0	
	6	Reserved			0	
	7	Reserved			0	
	8	Reserved			0	
SW 124	1	Reserved			0	
	2	Reserved			0	
	3	Reserved			0	
	4	Reserved			0	
	5	Reserved			0	
	6	Reserved			0	
	7	Reserved			0	
	8	Reserved			0	
SW 125	1	Reserved			0	
	2	Reserved			0	
	3	Reserved			0	
	4	Reserved			0	
	5	Reserved			0	
	6	Reserved			0	
	7	Reserved			0	
	8	Reserved			0	
SW 126	1	Reserved			0	
	2	Reserved			0	
	3	Reserved			0	
	4	Reserved			0	
	5	Reserved			0	
	6	Reserved			0	
	7	Reserved			0	
	8	Reserved			0	
SW 127	1	Reserved			0	
	2	Reserved			0	
	3	Reserved			0	
	4	Reserved			0	
	5	Reserved			0	
	6	Reserved			0	
	7	Reserved			0	
	8	Reserved			0	
SW 128	1	Reserved			0	
	2	Reserved			0	
	3	Reserved			0	
	4	Reserved			0	
	5	Reserved			0	
	6	Reserved			0	
	7	Reserved			0	
	8	Reserved			0	

SW NO.	DATA NO.	ITEM	Switch setting and function		Initial setting	Remarks
			1	0		
SW 129	1	Reserved			0	
	2	Reserved			0	
	3	Reserved			0	
	4	Reserved			0	
	5	Reserved			0	
	6	Reserved			0	
	7	Reserved			0	
	8	Reserved			0	
SW 130	1	Reserved			0	
	2	Reserved			0	
	3	Reserved			0	
	4	Reserved			0	
	5	Reserved			0	
	6	Reserved			0	
	7	Reserved			0	
	8	Reserved			0	
SW 131	1	Reserved			0	
	2	Reserved			0	
	3	Reserved			0	
	4	Reserved			0	
	5	Reserved			0	
	6	Reserved			0	
	7	Reserved			0	
	8	Reserved			0	
SW 132	1	Reserved			0	
	2	Reserved			0	
	3	Reserved			0	
	4	Reserved			0	
	5	Reserved			0	
	6	Reserved			0	
	7	Reserved			0	
	8	Reserved			0	
SW 133	1	Reserved			0	
	2	Reserved			0	
	3	Reserved			0	
	4	Reserved			0	
	5	Reserved			0	
	6	Reserved			0	
	7	Reserved			0	
	8	Reserved			0	
SW 134	1	Reserved			0	
	2	Reserved			0	
	3	Reserved			0	
	4	Reserved			0	
	5	Reserved			0	
	6	Reserved			0	
	7	Reserved			0	
	8	Reserved			0	
SW 135	1	Reserved			0	
	2	Reserved			0	
	3	Reserved			0	
	4	Reserved			0	
	5	Reserved			0	
	6	Reserved			0	
	7	Reserved			0	
	8	Reserved			0	

SW NO.	DATA NO.	ITEM	Switch setting and function						Initial setting	Remarks
			1			0				
SW 136	1	Reserved							0	
	2	Reserved							0	
	3	Reserved							0	
	4	Reserved							0	
	5	Reserved							0	
	6	Reserved							0	
	7	Reserved							0	
	8	Reserved							0	
SW 137	1	Reserved							0	
	2	Reserved							0	
	3	Reserved							0	
	4	Reserved							0	
	5	Reserved							0	
	6	Reserved							0	
	7	Reserved							0	
	8	Reserved							0	
SW 138	1	Reserved							0	
	2	Reserved							0	
	3	Reserved							0	
	4	Reserved							0	
	5	Reserved							0	
	6	Reserved							0	
	7	Reserved							0	
	8	Reserved							0	
SW 139	1	Reserved							0	
	2	Reserved							0	
	3	Reserved							0	
	4	Reserved							0	
	5	Reserved							0	
	6	Reserved							0	
	7	Reserved							0	
	8	Reserved							0	
SW 140	1	Reserved							0	
	2	Reserved							0	
	3	Reserved							0	
	4	Reserved							0	
	5	Reserved							0	
	6	Reserved							0	
	7	Reserved							0	
	8	Reserved							0	
SW 141		Delay timer before line connect in auto dial		0sec	1.5sec	3.0sec				
	1		No. 1	0	0	1			1	
	2		No. 2	0	1	0			0	
		Delay timer after line connect in auto dial		1.7sec	3.0sec	3.6sec	4.0sec			
	3		No. 3	0	0	1	1		0	
	4		No. 4	0	1	0	1		1	
		Calling time		45sec	90sec	55sec				
	5		No. 5	0	0	1			0	
	6		No. 6	0	1	0			0	
		CNG timing		3.5sec	1.5sec	3.0sec				
	7		No. 7	0	0	1			0	
	8		No. 8	0	1	0			0	
SW 142	1	Dial tone detection (before auto dial)	Yes			No			0	OPTION
	2	Busy tone detection (after auto dial)	Yes			No			0	
	3	Reserved							0	
	4	Reserved							1	
	5	Reserved							0	
	6	Reserved							0	
	7	Reserved							0	
	8	Reserved							0	

SW NO.	DATA NO.	ITEM	Switch setting and function		Initial setting	Remarks
			1	0		
SW 143	1	Reserved			0	
	2	Reserved			0	
	3	Reserved			0	
	4	Reserved			0	
	5	Reserved			0	
	6	Reserved			0	
	7	Reserved			0	
	8	Reserved			0	
SW 144	1	Reserved			1	
	2	Reserved			0	
	3	Reserved			1	
	4	Reserved			1	
	5	Reserved			1	
	6	Reserved			0	
	7	Reserved			0	
	8	Reserved			0	
SW 145	1	Reserved			1	
	2	Reserved			0	
	3	Reserved			0	
	4	Reserved			1	
	5	Reserved			1	
	6	Reserved			0	
	7	Reserved			0	
	8	Reserved			0	
SW 146	1	Reserved			0	
	2	Reserved			1	
	3	Reserved			1	
	4	Reserved			1	
	5	Reserved			1	
	6	Reserved			0	
	7	Reserved			0	
	8	Reserved			0	
SW 147 I SW 157	1	Reserved			0	
	2	Reserved			0	
	3	Reserved			0	
	4	Reserved			0	
	5	Reserved			0	
	6	Reserved			0	
	7	Reserved			0	
	8	Reserved			0	
SW 158	1	Reserved			0	
	2	Reserved			1	
	3	Reserved			0	
	4	Reserved			1	
	5	Reserved			0	
	6	Reserved			0	
	7	Reserved			0	
	8	Reserved			0	
SW 159	1	Reserved			0	
	2	Reserved			0	
	3	Reserved			0	
	4	Reserved			0	
	5	Reserved			0	
	6	Reserved			0	
	7	Reserved			0	
	8	Reserved			0	

SW NO.	DATA NO.	ITEM	Switch setting and function		Initial setting	Remarks
			1	0		
SW 160	1	Reserved			0	
	2	Reserved			0	
	3	Reserved			0	
	4	Reserved			0	
	5	Reserved			0	
	6	Reserved			1	
	7	Reserved			1	
	8	Reserved			0	
SW 161	1	Reserved			0	
	2	Reserved			0	
	3	Reserved			0	
	4	Reserved			1	
	5	Reserved			0	
	6	Reserved			0	
	7	Reserved			0	
	8	Reserved			0	
SW 162	1	Reserved			0	
	2	Reserved			0	
	3	Reserved			0	
	4	Reserved			0	
	5	Reserved			1	
	6	Reserved			1	
	7	Reserved			0	
	8	Reserved			0	
SW 163	1	Reserved			0	
	2	Reserved			0	
	3	Reserved			0	
	4	Reserved			0	
	5	Reserved			0	
	6	Reserved			0	
	7	Reserved			0	
	8	Reserved			1	
SW 164	1	Reserved			0	
	2	Reserved			1	
	3	Reserved			0	
	4	Reserved			0	
	5	Reserved			1	
	6	Reserved			0	
	7	Reserved			0	
	8	Reserved			1	
SW 165	1	Reserved			1	
	2	Reserved			0	
	3	Reserved			1	
	4	Reserved			1	
	5	Reserved			0	
	6	Reserved			0	
	7	Reserved			0	
	8	Reserved			1	
SW 166	1	Reserved			0	
	2	Reserved			1	
	3	Reserved			0	
	4	Reserved			0	
	5	Reserved			1	
	6	Reserved			1	
	7	Reserved			0	
	8	Reserved			1	

SW NO.	DATA NO.	ITEM	Switch setting and function		Initial setting	Remarks
			1	0		
SW 167	1	Reserved			0	
	2	Reserved			0	
	3	Reserved			1	
	4	Reserved			0	
	5	Reserved			0	
	6	Reserved			1	
	7	Reserved			0	
	8	Reserved			0	
SW 168	1	Reserved			0	
	2	Reserved			1	
	3	Reserved			1	
	4	Reserved			0	
	5	Reserved			0	
	6	Reserved			0	
	7	Reserved			1	
	8	Reserved			0	
SW 169	1	Reserved			0	
	2	Reserved			1	
	3	Reserved			0	
	4	Reserved			1	
	5	Reserved			0	
	6	Reserved			1	
	7	Reserved			1	
	8	Reserved			0	
SW 170	1	Reserved			0	
	2	Reserved			0	
	3	Reserved			0	
	4	Reserved			0	
	5	Reserved			1	
	6	Reserved			1	
	7	Reserved			0	
	8	Reserved			0	
SW 171	1	Reserved			0	
	2	Reserved			0	
	3	Reserved			0	
	4	Reserved			0	
	5	Reserved			0	
	6	Reserved			0	
	7	Reserved			0	
	8	Reserved			1	
SW 172	1	Reserved			0	
	2	Reserved			1	
	3	Reserved			0	
	4	Reserved			1	
	5	Reserved			0	
	6	Reserved			0	
	7	Reserved			0	
	8	Reserved			0	
SW 173	1	Reserved			0	
	2	Reserved			0	
	3	Reserved			1	
	4	Reserved			1	
	5	Reserved			0	
	6	Reserved			0	
	7	Reserved			0	
	8	Reserved			0	

SW NO.	DATA NO.	ITEM	Switch setting and function		Initial setting	Remarks
			1	0		
SW 174	1	Reserved			0	
	2	Reserved			1	
	3	Reserved			0	
	4	Reserved			1	
	5	Reserved			0	
	6	Reserved			0	
	7	Reserved			1	
	8	Reserved			1	
SW 175	1	Reserved			1	
	2	Reserved			0	
	3	Reserved			1	
	4	Reserved			0	
	5	Reserved			0	
	6	Reserved			0	
	7	Reserved			1	
	8	Reserved			1	
SW 176	1	Reserved			0	
	2	Reserved			1	
	3	Reserved			1	
	4	Reserved			0	
	5	Reserved			1	
	6	Reserved			0	
	7	Reserved			0	
	8	Reserved			0	
SW 177	1	Reserved			1	
	2	Reserved			1	
	3	Reserved			0	
	4	Reserved			1	
	5	Reserved			0	
	6	Reserved			1	
	7	Reserved			0	
	8	Reserved			1	
SW 178	1	Reserved			0	
	2	Reserved			0	
	3	Reserved			0	
	4	Reserved			0	
	5	Reserved			1	
	6	Reserved			1	
	7	Reserved			0	
	8	Reserved			0	
SW 179	1	Reserved			0	
	2	Reserved			0	
	3	Reserved			0	
	4	Reserved			0	
	5	Reserved			0	
	6	Reserved			0	
	7	Reserved			0	
	8	Reserved			1	
SW 180	1	Reserved			0	
	2	Reserved			1	
	3	Reserved			1	
	4	Reserved			0	
	5	Reserved			0	
	6	Reserved			1	
	7	Reserved			0	
	8	Reserved			1	

SW NO.	DATA NO.	ITEM	Switch setting and function		Initial setting	Remarks
			1	0		
SW 181	1	Reserved			1	
	2	Reserved			1	
	3	Reserved			0	
	4	Reserved			1	
	5	Reserved			0	
	6	Reserved			0	
	7	Reserved			0	
	8	Reserved			1	
SW 182	1	Reserved			0	
	2	Reserved			1	
	3	Reserved			1	
	4	Reserved			0	
	5	Reserved			1	
	6	Reserved			0	
	7	Reserved			0	
	8	Reserved			1	
SW 183	1	Reserved			0	
	2	Reserved			1	
	3	Reserved			0	
	4	Reserved			0	
	5	Reserved			0	
	6	Reserved			1	
	7	Reserved			0	
	8	Reserved			0	
SW 184	1	Reserved			0	
	2	Reserved			1	
	3	Reserved			1	
	4	Reserved			1	
	5	Reserved			1	
	6	Reserved			1	
	7	Reserved			1	
	8	Reserved			0	
SW 185	1	Reserved			0	
	2	Reserved			1	
	3	Reserved			1	
	4	Reserved			1	
	5	Reserved			0	
	6	Reserved			1	
	7	Reserved			1	
	8	Reserved			0	
SW 186	1	Reserved			1	
	2	Reserved			0	
	3	Reserved			0	
	4	Reserved			0	
	5	Reserved			0	
	6	Reserved			0	
	7	Reserved			0	
	8	Reserved			0	
SW 187	1	Reserved			1	
	2	Reserved			0	
	3	Reserved			0	
	4	Reserved			0	
	5	Reserved			0	
	6	Reserved			0	
	7	Reserved			0	
	8	Reserved			0	

SW NO.	DATA NO.	ITEM	Switch setting and function		Initial setting	Remarks
			1	0		
SW 188	1	Reserved			1	
	2	Reserved			0	
	3	Reserved			0	
	4	Reserved			0	
	5	Reserved			0	
	6	Reserved			0	
	7	Reserved			0	
	8	Reserved			0	
SW 189	1	Reserved			0	
	2	Reserved			0	
	3	Reserved			0	
	4	Reserved			0	
	5	Reserved			0	
	6	Reserved			0	
	7	Reserved			0	
	8	Reserved			0	
SW 190	1	Reserved			0	
	2	Reserved			0	
	3	Reserved			0	
	4	Reserved			0	
	5	Reserved			0	
	6	Reserved			0	
	7	Reserved			0	
	8	Reserved			0	
SW 191	1	Reserved			1	
	2	Reserved			0	
	3	Reserved			0	
	4	Reserved			0	
	5	Reserved			0	
	6	Reserved			0	
	7	Reserved			0	
	8	Reserved			0	
SW 192	1	Reserved			1	
	2	Reserved			0	
	3	Reserved			0	
	4	Reserved			0	
	5	Reserved			0	
	6	Reserved			0	
	7	Reserved			0	
	8	Reserved			0	
SW 193	1	Reserved			1	
	2	Reserved			0	
	3	Reserved			0	
	4	Reserved			0	
	5	Reserved			0	
	6	Reserved			0	
	7	Reserved			0	
	8	Reserved			0	
SW 194	1	Reserved			0	
	2	Reserved			0	
	3	Reserved			0	
	4	Reserved			0	
	5	Reserved			0	
	6	Reserved			0	
	7	Reserved			0	
	8	Reserved			0	

SW NO.	DATA NO.	ITEM	Switch setting and function						Initial setting	Remarks
			1			0				
SW 195	1	Reserved							0	
	2	Reserved							0	
	3	Reserved							0	
	4	Reserved							0	
	5	Reserved							0	
	6	Reserved							0	
	7	Reserved							0	
	8	Reserved							0	
SW 196	1	Reserved							0	
	2	Reserved							0	
	3	Reserved							1	
	4 5	Busy tone detect pulse in TEL/ FAX mode		2pulse	4pulse	6pulse	10pulse		0 0	
			No. 4	0	0	1	1			
			No. 5	0	1	0	1			
	6	Dial tone detect time in TEL/FAX mode	10sec			5sec			0	
	7	Reserved							0	
	8	Reserved							0	
SW 197 I SW 300	1	Reserved							0	
	2	Reserved							0	
	3	Reserved							0	
	4	Reserved							0	
	5	Reserved							0	
	6	Reserved							0	
	7	Reserved							0	
	8	Reserved							0	

4.2. Soft switch function description

SW1 No. 1, No. 2 Reserved

SW1 No. 3, No. 4 Receive mode

TEL, FAX or TEL/FAX mode is set.

SW1 No. 5 ~ No. 8 Reserved

SW2 No. 1 Reserved

SW2 No. 2 Forced 4800bps reception

When line conditions warrant that receptions take place at 4800 BPS

repeatedly. It may improve the success of receptions by setting at 4800BPS. This improves the receiving document quality and reduces handshake time due to fallback during training.

SW2 No. 3, No. 4 CED tone signal interval

For international communication, the 2100Hz CED tone may act as an echo suppressor switch, causing a communication problem. Though this soft switch is normally set to "0", it should be set to "1" so as to change the time between CED tone and DIS signal from 75ms to 500ms to eliminate the communication problem caused by echo.

SW2 No. 5 ~ No. 8 Reserved

SW3 No. 1 Length limitation of receive

Used to set the maximum page length. To avoid possible paper jam, the page length is normally limited to 1.5 meters for receive.

SW3 No. 2 Footer print

When set to "1", the date of reception, the sender machine No, and the page No. are automatically recorded at the end of reception.

SW3 No. 3 ~ No. 6 Reserved

SW3 No. 7 CSI transmission

CSI signal contains the sender's phone number registered in the machine. If this switch is set to "1", no sender's name will be printed at the receiving side.

SW3 No. 8 Action when RTN is received

The operation is set when the RTN signal is received in the G3 transmission mode.

SW4 No. 1 Reserved

SW4 No. 2 Dial pausing (sec/pause)

Pauses can be inserted between telephone numbers of direct dial connection. Selection of 4 sec or 2 sec pause is available.

SW4 No. 3 Pulse format of D.P.

Used to set pulse format of D.P. mode.

SW4 No. 4 DIS receive acknowledgement during G3 transmission

Used to make a choice of whether reception of NSF (DIS) is acknowledged after receiving two NSFs (DISs) or receiving one NSF (two DISs). It may be useful for overseas communication to avoid an echo suppression problem, if set to 1.

SW4 No. 5 Non-modulation carrier for V29 transmission mode

Though transmission of a non-modulated carrier is not required for transmission by the V29 modem according to the CCITT recommendation, it may be permitted to send a non-modulated carrier before the image signal to avoid an echo suppression problem. It may be useful for overseas communication to avoid an echo suppression problem, if set to 1.

SW4 No. 6 Reserved

SW4 No. 7 Protocol monitor

Normally set to "0". If set to "1", communication can be checked, in case of troubles, without using a G3 tester or other tools. When communication FSK data transmission or reception is made, the data is taken into buffer. When communication is finished, the data analyzed and printed out. When data is received with the line monitor (SW-4 No. 8) set to "1" the reception level is also printed out.

SW4 No. 8 Line monitor

Normally set to "0". If set to "1", the transmission speed and the reception level are displayed on the LCD. Used for line tests.

SW5 No. 1 ~ No. 8 Reserved

SW6 No. 1, No. 2 Reserved

SW6 No. 3 Digital cable equalizer for reception

Digital cable equalizer for reception

0: OFF

1: ON

SW6 No. 4 Sender's information transmit

When it is set at 0, sender's name, sending page number and so on are automatically printed in the recording paper on the receiving side during transmission. Thus, the sender can be known on the receiving side.

SW6 No. 5 ~ No. 8 Reserved

SW7 No. 1 H2 mode

Used to determine reception of H2 mode (15 sec transmission mode). When set to OFF, H2 mode reception is inhibited even though the transmitting machine has H2 mode function.

SW7 No. 2 Reserved

SW7 No. 3 ECM mode

Used to determine ECM mode function.

SW7 No. 4 ECM MMR mode

MMR (Modified MR) selects presence of the compression function.

SW7 No. 5 ~ No. 8 Signal transmission level

Used to control the signal transmission level in the range of -0dB to -31dB.

SW8 No. 1 ~ No. 4 Recall interval (FAX)

Choice is made for a recall interval for speed and rapid dial numbers. Use a binary number to program this. If set to 0 accidentally, 1 will be assumed.

SW8 No. 5 ~ No. 8 Recall times (FAX)

Choice is made as to how many recall times should be made. Use a binary number to program this.

SW9 No. 1 ~ No. 3 Reserved

SW9 No. 4 Sort Copy function

Used for sort copy.

SW9 No. 5 ~ No. 7 Reserved

SW9 No. 8 Dial mode

Switch the type according to the telephone circuit connected to the facsimile.

SW10 No. 1, No. 2 Reserved

SW10 No. 3 CNG detection

When setting to "1", the CNG signal detection function.

SW10 No. 4 Number of CNG detection

Used for detection of CNG in 2 or 3 pulses.

SW10 No. 5 Signal detect time in TEL/FAX mode

This setting is used for the time of the pseudo ringer off interval in the TEL/FAX mode.

SW10 No. 6 Reserved

SW10 No. 7, No. 8 CNG detection time after ringing

CNG detection time after completion of ringing.

SW11 No. 1, No. 2 Reserved

SW11 No. 3 Time display format

When this switch is set to "0", time is displayed in 12-hour system. When set to "1", 24-hour system.

SW11 No. 4 Date display format

Used to select date display/print formats.

0: DAY-Month-Year

1: Month-Day-Year

SW11 No. 5, No. 6 Pseudo ringing time at TEL/FAX automatic switching mode

Choice is made as to how long to rumble the dummy ringer on TEL/FAX automatic switching mode.

SW11 No. 7 Reserved

SW11 No. 8 CED detection time

It is effective to change this if detection error frequently occurs by setting the CED automatic detection time.

SW12 No. 1 MH fixed

1: Both sending and reception are forcibly fixed to MH.

0: Adjusted to the performance of the other machine.

SW12 No. 2 ~ No. 5 Reserved

SW12 No. 6 Key tone

Used to toggle the key sound between on and off.

SW12 No. 7, No. 8 Reserved

SW13 No. 1 ~ No. 8 Reserved

SW14 No. 1 ~ No. 4 Reserved

SW14 No. 5 ~ No. 8 Modem Speed

Used to determine the initial modem speed. The default is 14400BPS(V.17). It may be necessary to program it to a slower speed when frequent line fallback is encountered, in order to save the time required for the fallback procedure.

SW15 No. 1 ~ No. 8 Reserved

Pauses can be inserted between telephone numbers of direct dial connection. Selection of 4 sec or 2 sec pause is available.

SW16 No. 1 Digital cable equalizer for transmission

Digital cable equalizer for transmission

0: OFF

1: ON

SW16 No. 2, No. 3 Reserved

SW16 No. 4 Flash send time

Used to select length of flash.

SW16 No. 5, No. 6 Flash short time

Selects the flash send time when the flash send time of SW16 No. 4 is set to short time.

SW16 No. 7, No. 8 Flash long time

Selects the flash send time when the flash send time of SW16 No. 4 is set to long time.

SW17 ~ SW20 No. 1 ~ No. 8 Reserved

SW21 No. 1, No. 2 Line density selection

Used to set the transmission mode which is automatically selected when the Resolution key is not pressed. In the copy mode, however, the fine mode is automatically selected unless the Resolution key is manually set to another mode.

SW21 No. 3 ~ No. 5 Communication results printout

It is possible to obtain communication results after each transaction. Normally, the switch is set (No. 3: 0, No. 4: 0, No. 5: 1) so that the communication result is produced only a communication error is encountered. If No. 3 was set to 1, No. 4 was set to 1 and No. 5 was set to 0, the communication result will be produced every time a communication is done, even if the communication was successful. If No. 3 was set to 0, No. 4 to 1 and No. 5 to 0, the communication result will be produced every transmission. Setting No. 3 to 1 No. 4 to 0 and No. 5 to 0 will disable this function. No transaction report will be printed. If No. 3 was set to 0, No. 4 to 0 and No. 5 to 0, the communication result is produced only after a memory transmission or when a communication error is encountered.

SW21 No. 6 Caller ID function

Used for Caller ID function.

SW21 No. 7 Activity report print

This soft switch is used to select: whether or not to print out the activity report when the memory is full. An activity report can be printed when the following key entry command is mode.

"FUNCTION ", "↓", "↓", "→"

After producing the activity report, all the data in the memory will be cleared. When the switch function is set to "0" (no), the data in the memory will be deleted from the oldest as it reaches the maximum memory capacity.

SW21 No. 8 Daylight saving (Summer time)

Used to set YES/NO of holding function by the Hold key.

SW22 No. 1 Activate Receive Fax to E-mail

The Receive Fax to E-mail function ON/OFF is set.

SW22 No. 2 Print setting of received fax for Receive Fax to E-mail

This soft switch is used to select before.

0: Received FAX is always printed when Receive Fax to E-mail function worked.

1: Received FAX is printed only transfer error when Receive Fax to E-mail function worked.

SW22 No. 3 Report setting for Receive Fax to E-mail

This soft switch is used to select before.

0: Transfer result is always printed when Receive Fax to E-mail function worked.

1: Transfer result is printed only transfer error when Receive Fax to E-mail function worked.

SW22 No. 4 Activate Secure Receive

The Secure receive function ON/OFF is set.

SW22 No. 5 ~ No. 8 Reserved

SW23 No. 1 Ink save mode

If set to "1", printing is done with half of ink.

SW23 No. 2 Receive reduce setting

If set to 1, it is reduced automatically when receiving.

SW23 No. 3, No. 4 Paper size

The paper size is set.

SW23 No. 5 Half tone copy print swath direction

The direction of the half tone copy printing is set.

SW23 No. 6 ~ No. 8 Reserved

SW24 ~ SW31 No. 1 ~ No. 8 Reserved

SW32 No. 1 ~ No. 3 Reserved

SW32 No. 4 Error criterion

Used to select error criterion for sending back RTN when receiving image data.

SW32 No. 5, No. 6 EOL (End of Line) detection timer

Used to make a choice of whether to use the 25-second or 13-second timer for detection of End of line This is effective to override communication failures with some facsimile models that have longer End of line detection.

SW32 No. 7, No. 8 Reserved

SW33 ~ SW38 No. 1 ~ No. 8 Reserved

SW39 No. 1 ~ No. 6 Reserved

SW39 No. 7 Make/Break ratio in D.P.

Used to set pulse ratio of D.P. mode.

SW39 No.8 Pre pause time in D.P.

This setting is used for the pause time before dial pulse start.

SW40 No. 1 ~ No. 3 Inter digit pause time

Used to set the pause time between pulse.

SW40 No. 4 Change to PB from PB by “ * “ key.

When setting to 1, the mode is changed by pressing the key from the pulse dial mode to the tone dial mode.

SW40 No. 5 ~ No. 8 Reserved

SW41 No. 1, No. 2 DTMF detect time

Used to set detect time of DTMF (Dual Tone Multi Frequency) used in remote reception (5 **). The longer the detection time is, the error detection is caused by noises.

SW41 No. 3 Protection of remote reception (5 **) detect

Used to set the function of remote reception (5 **). When set to “1”, the remote reception function is disabled.

SW41 No. 4 ~ No. 7 Remote operation code figure by external TEL(0-9)

Remote operation codes can be changed from 0 through 9. If set to greater than 9, it defaults to 9. The “5” is not changed.

SW41 No. 8 Reserved

SW42 ~ SW50 No. 1 ~ No. 8 Reserved

SW51 No. 1 ~ No. 5 Reserved

SW51 No. 6 Busy tone detect when TEL/FAX mode

This setting is used to enable or disable busy tone detection in the TEL/FAX mode.

SW51 No. 7 Dial tone detect when TEL/FAX mode

This setting is used to enable or disable dial tone detection in the TEL/FAX mode.

SW51 No. 8 Reserved

SW52 ~ SW60 No. 1 ~ No. 8 Reserved

SW61 No. 1, No. 2 Reserved

Ringer volume:

The calling sound volume of CI signal receiving is set.

SW61 No. 3, No. 4 Ringer volume

This allows selection of MTF correction (dimness correction) in the half tone mode.

When "NO" (=1) is selected, the whole image becomes soft and mild.

Clearness of characters will be reduced. Normally set to "YES" (=0).

SW61 No. 5, No. 6 Speaker volume

The line monitor volume is set.

SW61 No. 7, No. 8 Reserved

SW62 ~ SW109 No. 1 ~ No. 8 Reserved

SW110 No. 1 ~ No. 3 Connect configuration for LAN controller

Used to the communication speed when connecting to LAN.

SW110 No. 4 ~ No. 8 Reserved

SW111 No. 1 ~ No. 4 Detect time of LAN link ON

Used to change the setting for the link ON detection time when connecting a LAN cable.

SW111 No. 5 ~ No. 8 Detect time of LAN link OFF

Used to change the setting for the link OFF detection time when connecting a LAN cable.

SW112 No. 1 Default file format for network scan

SW setting the default of the compression format and the file type required for generating the image data from network scanned data.

SW112 No. 2, No. 3 Default resolution for network scan

SW setting the default resolution on network scanning.

SW112 No. 4 ~ No. 7 Reserved

SW112 No. 8 SMTP authentication type

Used to switching the SMTP authentication type.

"0": The authentication type which is not supported by the server is disabled.

"1": Authenticated from "LOGIN" regardless of the authentication type of the server.

SW113 No. 1 ~ No. 8 Reserved

SW114 No. 1 ~ No. 5 DTMF output level (High)

To set the level to output high group DTMF signals. -15 to 0 dBm (0.5dBm unit)

SW114 No. 6 ~ No. 8 Reserved

SW115 No. 1 ~ No. 5 DTMF output level (Low)

To set the level to output low group DTMF signals. -15 to 0 dBm (0.5dBm unit)

SW115 No. 6 ~ No. 8 Reserved

SW116 No. 1 ~ No. 3 Dial tone detection frequency

To select frequency range of signals to be detected as Dial Tone.

SW116 No. 4, No. 5 Busy tone detection frequency

To select frequency range of signals to be detected as Busy Tone.

SW116 No. 6 ~ No. 8 Reserved

SW117 No.1 ~ No. 4 Number of rings for auto-receive (0: No ring receive)

When the machine is set in the auto receive mode, the number of rings before answering can be selected. It may be set from zero to nine rings using a binary number. If the soft switch was set to 1, a direct connection is made to the facsimile. If it was above 9, receive rings are set to 9.

SW117 No.5 ~ No. 8 Distinctive ringring

When set to "0001", machine recognize the CI signal FAX ringing or TEL ringing automatically.

SW118 No. 1 ~ No. 8 Reserved

SW119 No. 1 ~ No. 3 Reserved

SW119 No. 4 ~ No. 6 CI signal min. off time

Used to set the maximum length of CI signal off time, which is used to determine a sequence of CI signals.

SW119 No. 7, No. 8 Reserved

SW120 No. 1 ~ No. 4 Reserved

SW120 No. 5 ~ No. 8 CI Signal Frequency

Used to set a frequency that is considered as the CI signal.

SW121 ~ SW140 No. 1 ~ No. 8 Reserved

SW141 No. 1, No. 2 Delay timer before line connect in auto dial

Set a time period between start of dial operation and line connection in the auto dial mode.

SW141 No. 3, No. 4 Delay timer after line connect in auto dial

Set a time period between dial-up line connection and dial data transmission in the auto dial mode.

SW141 No. 5, No. 6 Calling time

Set the call time for dialing in the auto dial mode.

SW141 No. 7, No. 8 CNG timing

Set a time period between dialing in the auto dial mode and CNG signal transmission.

SW142 No. 1 Dial tone detection (before auto dial)

When set to "1", a number is dialed after detecting the dial tone.

SW142 No. 2 Busy tone detection (after auto dial)

When set to "1", the busy tone is detected after dialing a number.

SW142 No. 3 Recall Control (for FCC part68)

Recalling fixed only one time when dialing was unsuccessful without detecting busy tone signal.

SW142 No. 4 ~ No. 8 Reserved

SW143 ~ SW195 No. 1 ~ No. 8 Reserved

SW196 No. 1 ~ No. 3 Reserved

SW196 No. 4, No. 5 Busy tone detect pulse in TEL/FAX mode

This setting is used for the detection pulse number until busy tone is detected in the TEL/FAX mode.

SW196 No. 6 Dial tone detect time in TEL/FAX mode

This setting is used for the continuous detection time until dial tone is detected in the TEL/FAX mode.

SW196 No. 7, No. 8 Reserved

SW197 ~ SW300 No. 1 ~ No. 8 Reserved

[3] Troubleshooting

Refer to the following actions to troubleshoot any of the problems mentioned in 1-4.

[1] A communication error occurs.

[2] Image distortion produced.

[3] Unable to do overseas communication.

[4] Communication speed slow due to FALLBACK.

- In crease the transmission level SOFT SWITCH A4-1, 2, 3, 4, 5. May be used in case [1] [2] [3].
- Decrease the transmission level SOFT SWITCH A4-1, 2, 3, 4, 5. May be used in case [3].
- Apply line equalization SOFT SWITCH A2-1, 2, 3, 4. May be used in case [1] [2] [3] [4].
- Slow down the transmission speed SOFT SWITCH A2-1, 2, 3, 4. May be used in case [2] [3].
- Replace the LIU PWB. May be used in all cases.
- Replace the control PWB. May be used in all cases.
- If transmission problems still exist on the machine, use the following format and check the related matters.

TO: ATT: Ref.No. :
CC: ATT: Date :
FM: Dept :
Sign :

***** Facsimile communication problem *****			Ref.No.:
From: Mr.	Fax Tel No.:		Date:
Our customer	Name		Tel No.
	Address		Fax No.
	Contact person		Model name
Other party	Name		Tel No.
	Address		Fax No.
	Contact person		Model name
Problem mode	Line: Domestic / international	Model: G3	Phase: A, B, C, D.
	Reception / Transmission	Automatic reception / Manual reception	
		Automatic dialing / Manual dialing / Others	
Frequency:	%	ROM version:	
Confirmation item	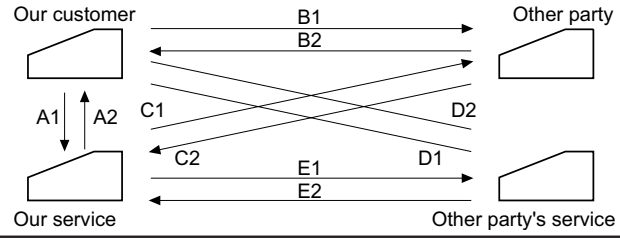	Please mark problem with an X. No problem is: 0.	

A1	A2	B1	B2	C1	C2	D1	D2	E1	E2

Transmission level setting is ( ) dB at our customer

Transmission level ( ) dBm
Reception level ( ) dBm
By level meter at B1 and B2

Comment	
Countermeasure	

**** Please attach the G3 data and activity report on problem. ****

* Please complete this report before calling the "TAC" hotline if problem still occurs.

[4] Error code table

1. Communication error code table

1.1. G3 Transmission

Code	Final received signal	Error Condition (Receiver side)
0	Incomplete signal frame	Cannot recognize bit stream after flag
1	NSF, DIS	Cannot recognize DCS signal by echo etc. Cannot recognize NSS signal (FIF code etc.)
2	CFR	Disconnects line during reception (carrier missing etc.)
3	FTT	Disconnects line by fall back
4	MCF	Disconnects line during reception of multi page Cannot recognize NSS, DCS signal in the case of mode change
5	PIP or PIN	The line is hung up without replying to telephone request from the receiving party.
6	RTN or RTP	Cannot recognize NSS, DCS signal after transmit RTN or RTP signal.
7	No signal or DCN	No response in receiver side or DCN signal received* (transmitter side)
8	-	Owing to error in some page the error could not be corrected although the specified number of error retransmissions were attempted.
11	-	Error occurred after or while reception by the remote (receiving) machine was revealed to be impossible.
12	-	Error occurred just after fallback.
13	-	Error occurred after a response to retransmission end command was received.

1.2. G3 Reception

Code	Final received signal	Error Condition (Receiver side)
0	Incomplete signal frame	Cannot recognize bit stream after flag
1	NSS, DCS	Cannot recognize CFR or FTT signal Disconnects line during transmission (line error)
2	NSC, DTC	Cannot recognize NSS signal (FIF code etc.)
3	EOP	Cannot recognize MCF, PIP, PIN, RTN, RTP signal
4	EOM	Cannot recognize MCF, PIP, PIN, RTN, RTP signal in the case of mode change
5	MPS	The line is hung up without replying to communication request.
6	PR1-Q	Cannot recognize PIP, PIN signal in the case of TALK request
7	No signal or DCN	No response in transmitter (cannot recognize DIS signal) or DCN signal received* (receiver side)
8	-	Error occurred upon completion of reception of all pages.
9	-	Error occurred when mode was changed or Transmission/Reception switching was performed.
10	-	Error occurred during partial page or physical page reception.
11	-	Error occurred after or during inquiry from the remote (transmitting) machine as to whether reception is possible or not.
12	-	Error occurred during or just after fallback.
13	-	Error occurred after the retransmission end command was received.

CHAPTER 3. MECHANISM BLOCKS

[1] General description

1. Document feed block and diagram

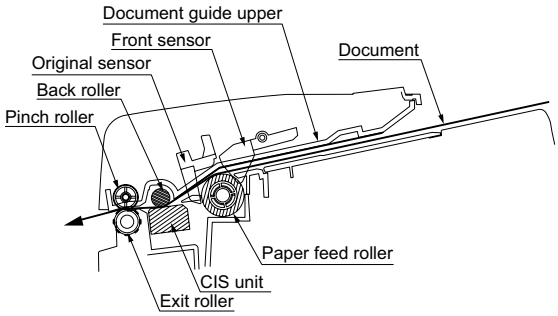

Fig. 1

2. Document feed operation

1) The original, which is set in the document hopper, feeds automatically when the Front sensor is activated. This in turn activates the drive motor which drives the paper feed roller. The document stops when the lead edge is detected by the Original sensor.
2) The lead edge of the original is fed a specified number of pulses after the lead edge of the document is detected for the reading process to begin.
3) The trailing edge of the original is fed a specific number of pulses after the trailing edge of the document deactivates the Original sensor. The read process then stops and the original is discharged.
4) When the Front sensor is in the OFF state (any document is not set up in the hopper guide), the drive will be stopped when the document is discharged.

3. Hopper mechanism

3.1. General view

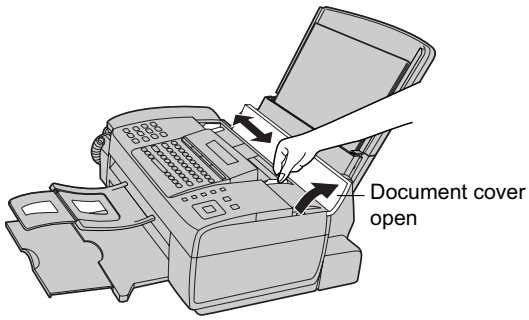

Fig. 2

The hopper section contains document guides that are used to adjust the hopper to the width of the original document. This ensures that the original feeds straight into the fax machine for scanning.

Document width: 70 mm to 216 mm (70 mm size to Letter longitudinal size)

NOTE: Adjust the document guide after setting up the document.

3.2. Automatic document feed

1) Use of the paper feed roller and separate plate ensures error-free transport and separation of documents. The paper feed spring presses the document to the paper feed roller to assure smooth feeding of the document.
2) Document separation method: Separate plate

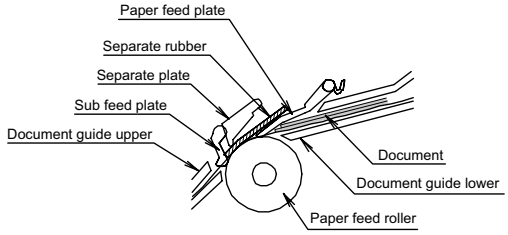

Fig. 3

3.3. Documents applicable for automatic feed

	10 sheets	1 sheet (Manual)
Paper weight	20 lbs. (74.3 g/m^2) at the environment 23 ± 5°C 55 ± 10%	14 lbs. ~ 42 lbs. (52 g/m^2 ~ 157g/m^2)
Paper thickness (ref.)	0.09 mm	0.06 mm ~ 0.18mm
Paper size	A4 (210 mm x 297 mm)	
Feeder capacity	A4: 10 sheets max.	

NOTE: Double-side coated documents and documents on facsimile recording paper should be inserted manually. The document feed quantity may be changed according to the document thickness.

Documents corresponding to a paper weight heavier than 70 kg (80 g/m^2) and lighter than 135 kg (157 g/m^2) are acceptable for manual feed. Documents heavier than 135 kg (157 g/m^2) in terms of the paper weight must be duplicated on a copier to make it operative in the facsimile.

3.4. Loading the documents

1. Make sure that the documents are of suitable size and thickness, and free from creases, folds, curls, wet glue, wet ink, clips, staples and pins.
2. Place documents face down in the hopper.
   i) Adjust the document guides to the document size.
   ii) Align the top edge of documents and gently place them into the hopper. The first page under the stack will be taken up by the feed roller to get ready for transmission.

NOTE: 1) Curled edge of documents, if any, must be straightened out.
2) Do not load the documents of different sizes and/or thicknesses together.

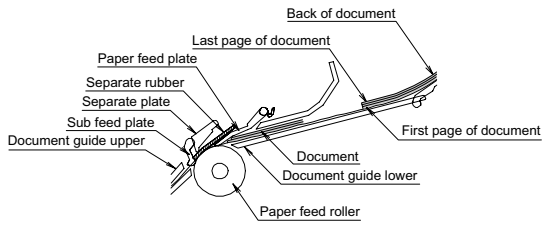

Fig. 4

3.5. Documents requiring use of document carrier

1) Documents smaller than 148mm (W) x 140mm (L).
2) Documents thinner than the thickness of 0.06mm.
3) Documents containing creases, folds, or curls, especially those whose surface is curled (maximum allowable curl is 5mm).
4) Documents containing tears.
5) Carbon-backed documents. (Insert a white sheet of paper between the carbon back and the document carrier to avoid transfer of carbon to the carrier.)
6) Documents containing an easily separable writing material (e.g., those written with a lead pencil).
7) Transparent documents.
8) Folded or glued documents.
   Document in document carrier should be inserted manually into the feeder.

4. Document release

4.1. General description

To correct a jammed document or to clean the document running surface, pull the insertion side of document center of the operation panel. To open the upper document guide, the operation panel must be opened first.

5. Recording block

1) The PU ROLLER is rotated by the DC motor to feed the recording paper. The SEPARATE RUBBER feeds one by one from the top paper.
2) The recording paper contacts the P-IN SENSOR.
3) The PAPER FEED ROLLER rotates in the reverse direction of paper feed (refer to the figure of PU ROLLER). The tip of recording paper is set parallel to the PAPER FEED ROLLER when it reaches to the PAPER FEED ROLLER and the PRESS ROLLER after through the PU ROLLER.
4) Then the PAPER FEED ROLLER rotates in the paper feed direction to feed the recording paper downwards. (refer to the figure of PAPER FEED)
5) The CARTRIDGE prints the recording paper, which is then ejected by the EXIT ROLLER and STAR WHEEL.

5.1. General view

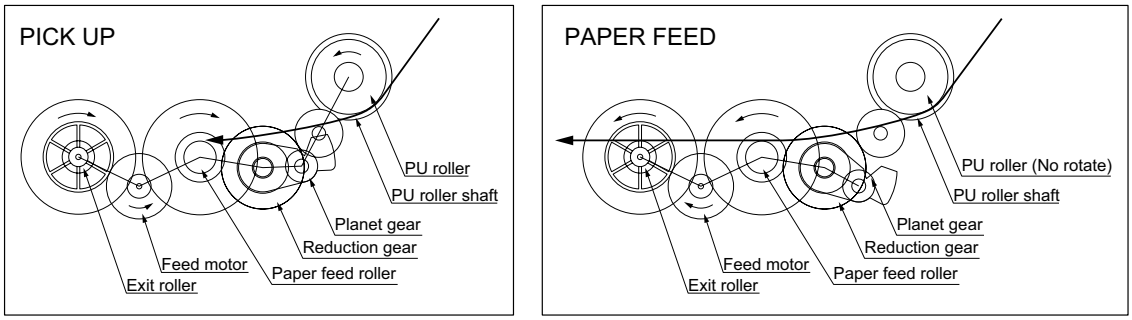

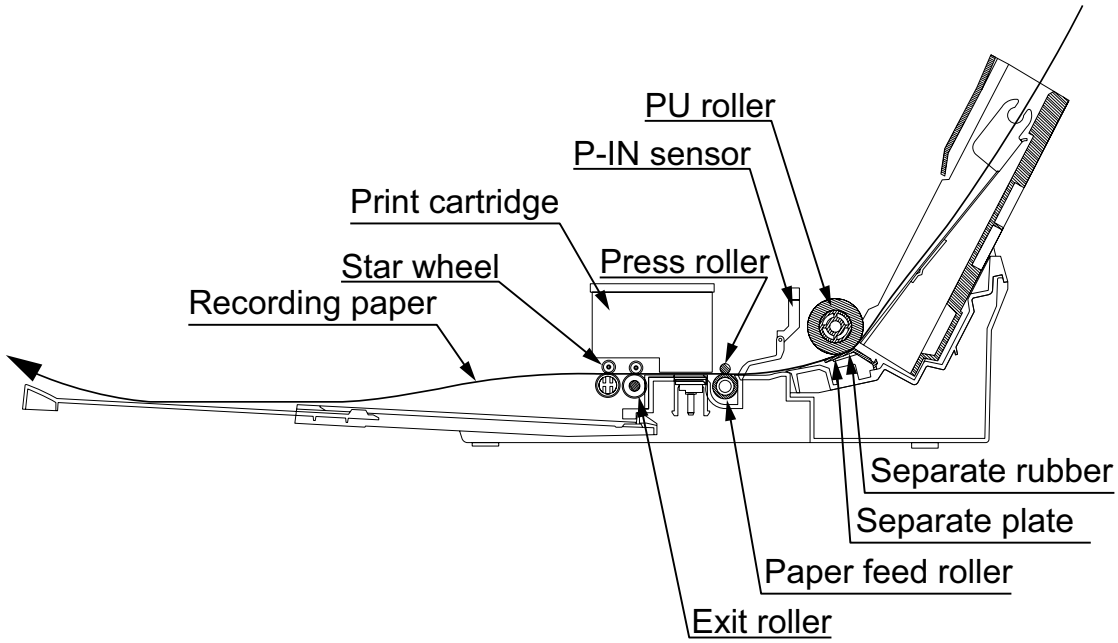

Fig. 5

[2] Ink jet printer

1. Overall troubleshooting of Printer

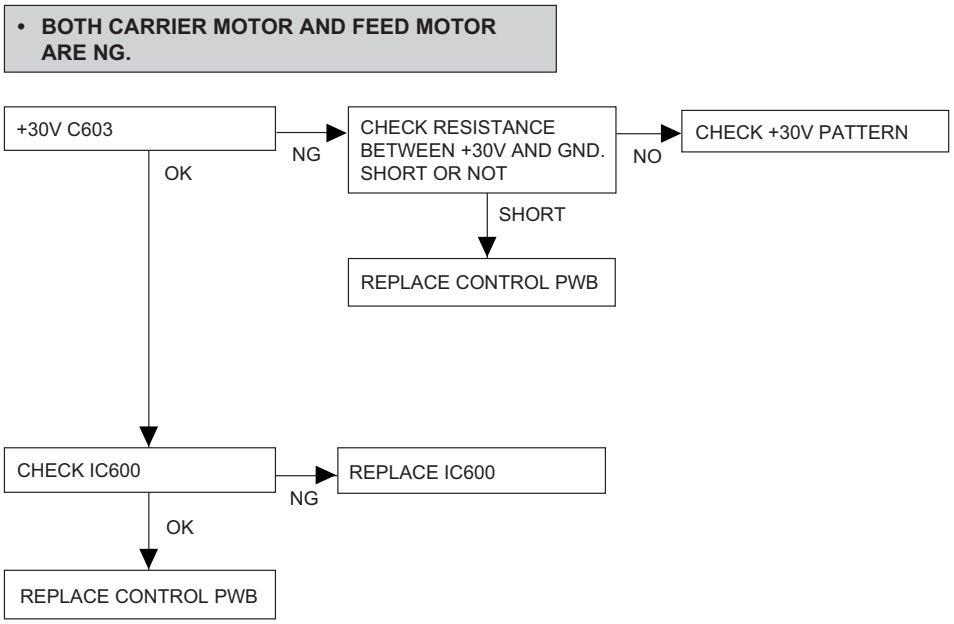

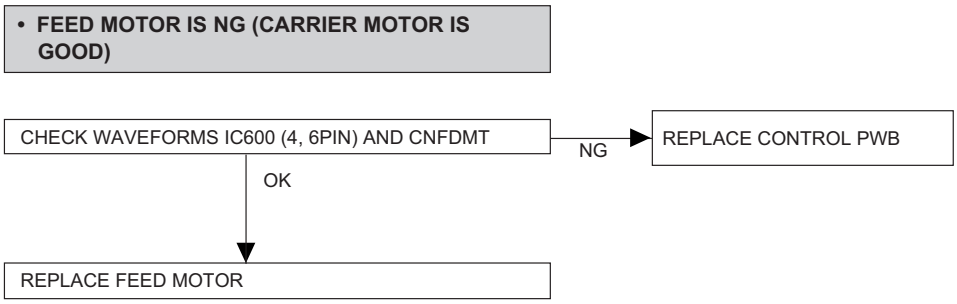

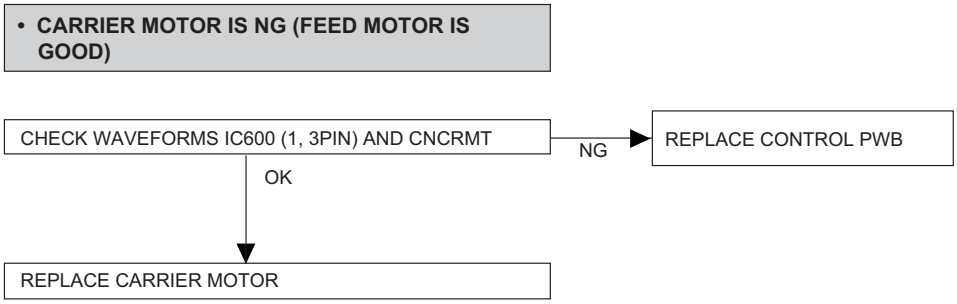

• MISSING NOZZLES (RESULT OF CHECK PATTERN OR CLEAN NOZZLES)

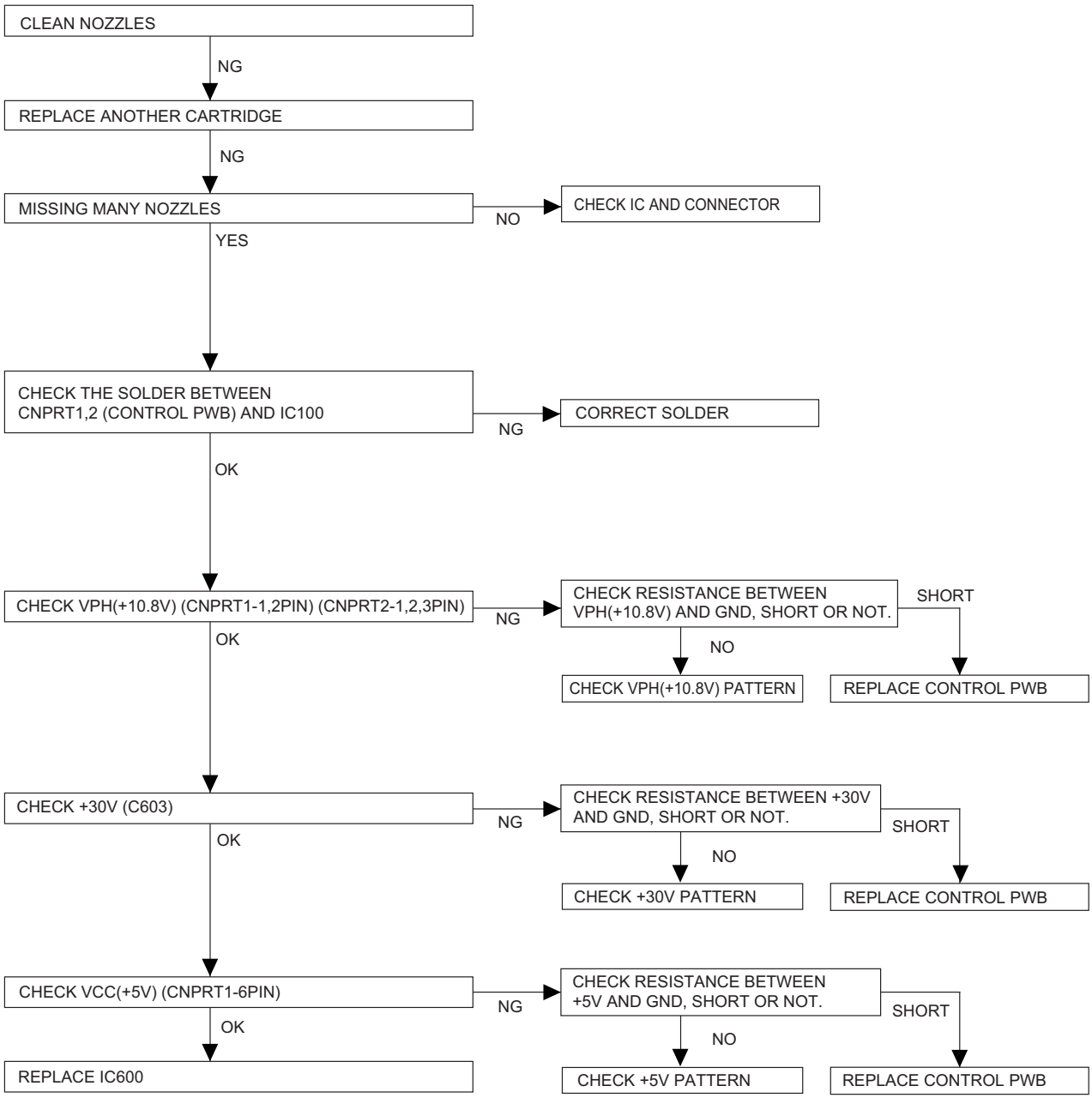

[3] Disassembly and assembly procedures

- This chapter mainly describes the disassembly procedures. For the assembly procedures, reverse the disassembly procedures.
- Easy and simple disassembly/assembly procedures of some parts and units are omitted. For disassembly and assembly of such parts and units, refer to the Parts List.
- The numbers in the illustration, the parts list and the flowchart in a same section are common to each other.
- To assure reliability of the product, the disassembly and the assembly procedures should be performed carefully and deliberately.

1. Operation panel unit

NOTE:
For disassembly of the inside of the unit, refer to the exploded view in the parts guide.

Parts list (Fig. 1)

No.	Part name	Qty
1	Mechanism unit	1
2	Screw (3x6)	1
3	Damper rubber	1
4	Connector cover	1
5	Flat wire	1
6	Operation panel unit	1

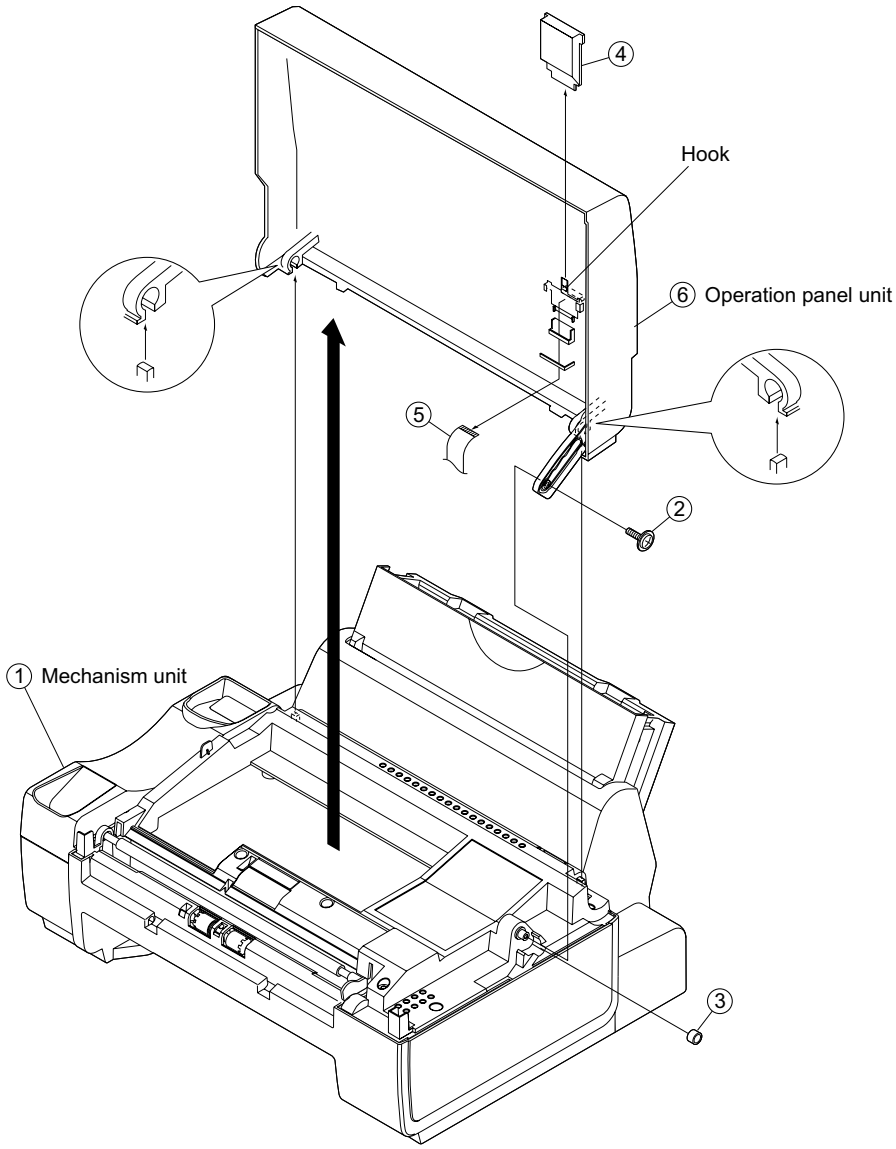

Fig.1

2. Top cover/Back cover

NOTE:

1. Remove the back cover and then the top cover.
2. Insert the hook switch lever into the top cover, then install the back cover.

Parts list (Fig. 2)

No.	Part name	
1	Mechanism unit	1
2	Platen roller	1
3	Screw (3x10)	7
4	Hook	2
5	Top cover	1
6	Screw (3x10)	2
7	Hook	2
8	Back cover	1

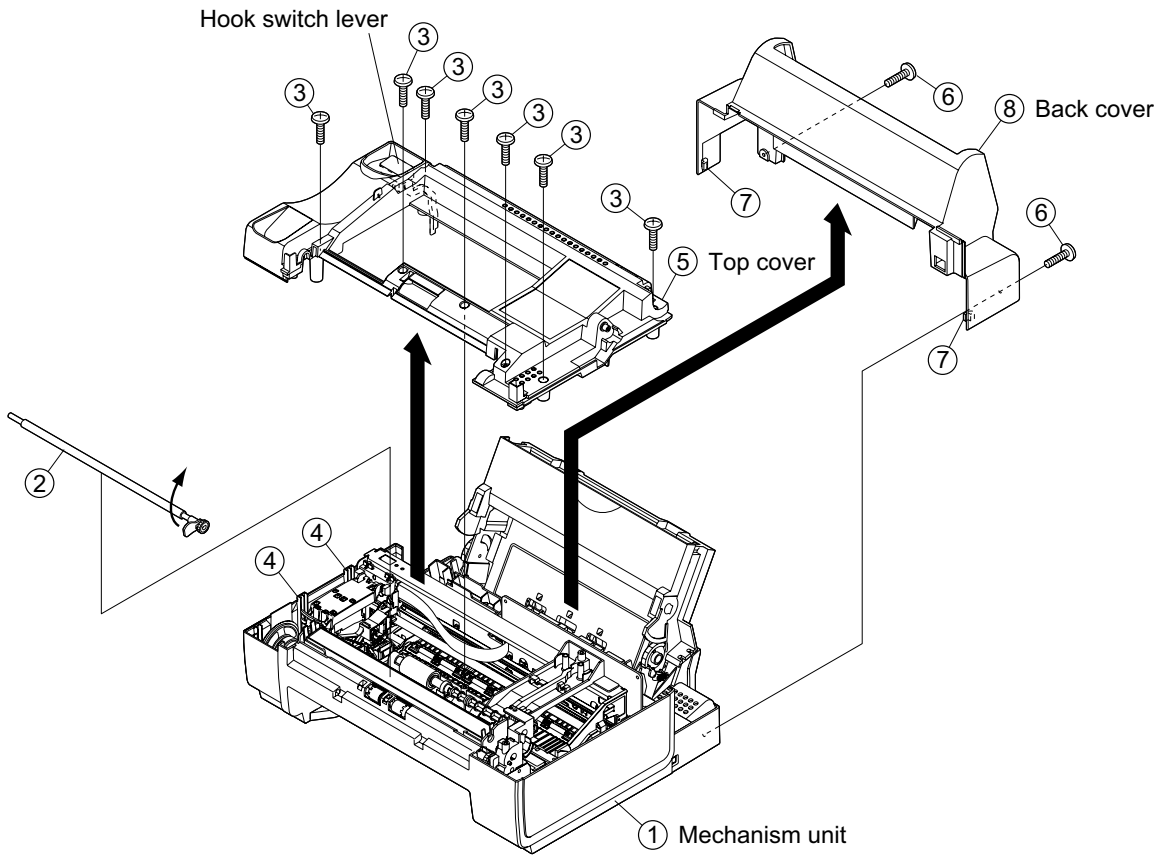

Fig.2

3. Paper hopper unit/PU guide upper

NOTE:
For disassembly of the inside of the unit, refer to the exploded view in the parts guide.

Parts list (Fig. 3)

No.	Part name	Qty	No.	Part name	Qty
1	Mechanism unit	1	9	Paper pad	1
2	Screw (3x10)	2	10	Rotation plate	1
3	Paper hopper unit	1	11	Coil spring	2
4	Screw (3x10)	2	12	Paper hopper	1
5	RP release spring	1	13	Connector	3
6	RP release gear,right	1	14	Screw (3x10)	2
7	RP release gear,left	1	15	PU guide upper unit	1
8	RP release plate	1			

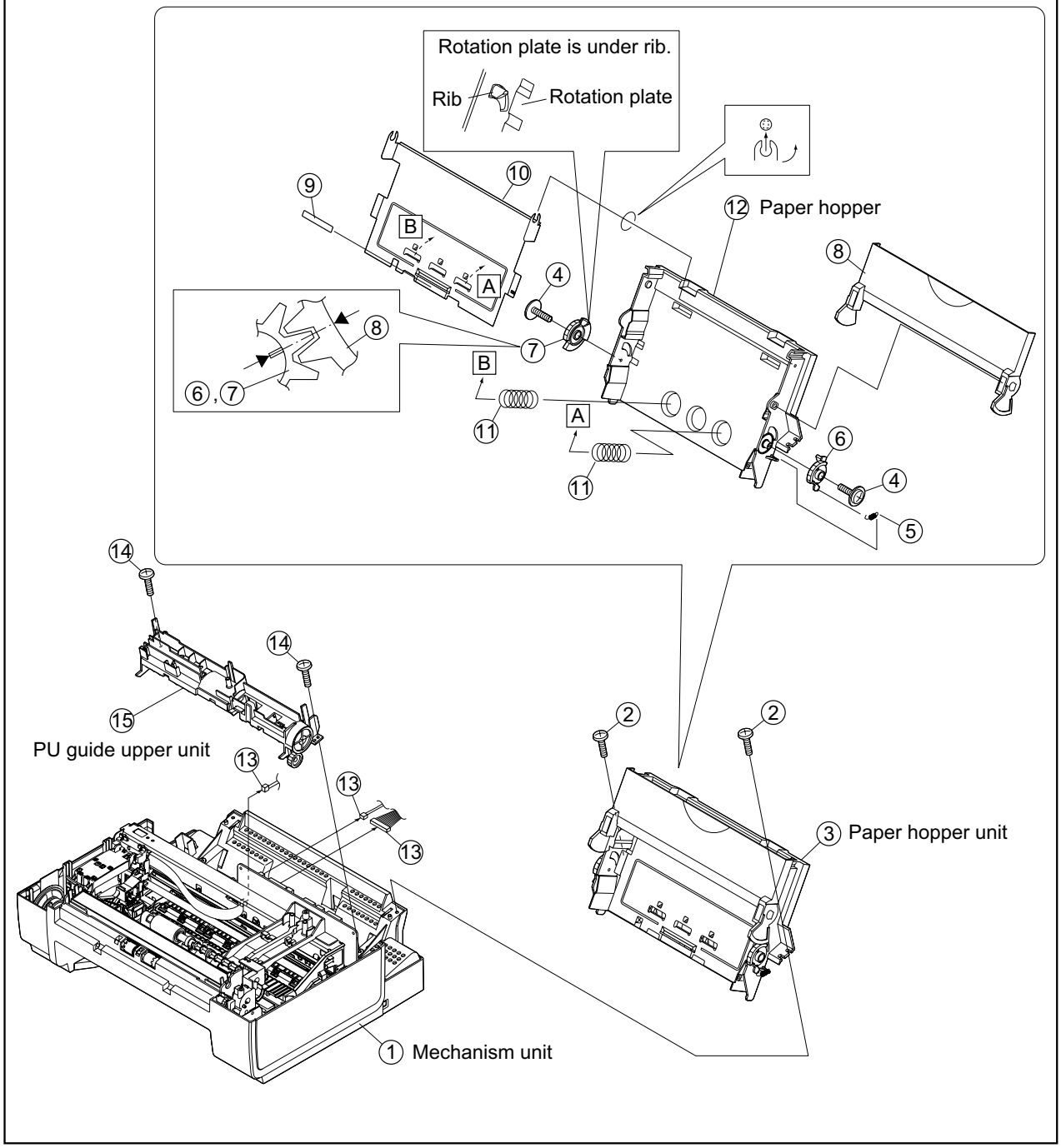

Fig.3

4. PU guide lower unit/TX drive frame unit

NOTE:
For disassembly of the inside of the unit, refer to the exploded view in the parts guide.

Parts list (Fig. 4)

No.	Part name	Qty
1	Mechanism unit	1
2	Screw (3x10)	5
3	PU guide lower unit	1
4	Screw (3x10)	3
5	Earth plate	1
6	Connector	2
7	Screw (3x10)	2
8	TX drive frame unit	1
9	RF roller shaft	1

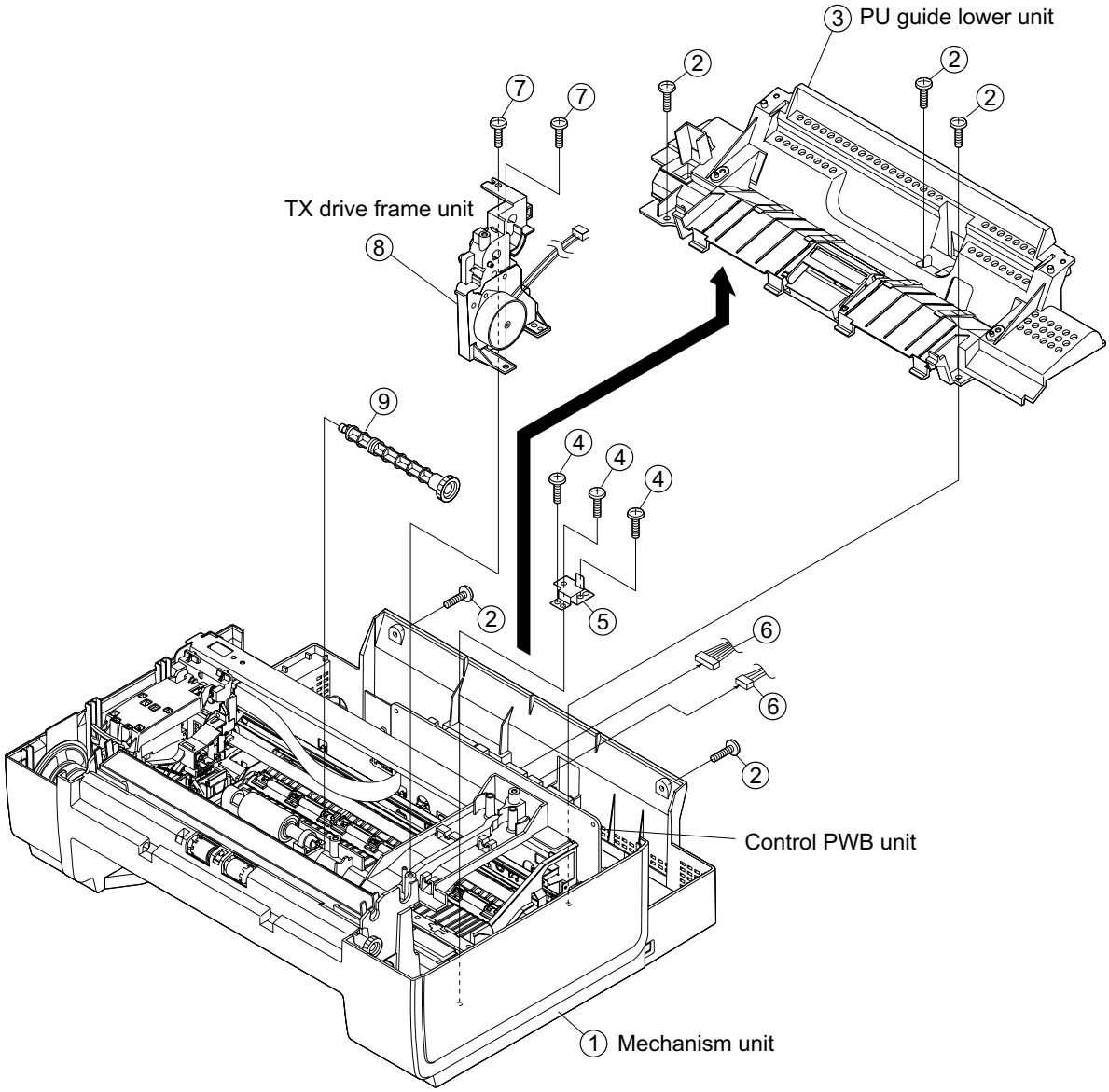

Fig.4

5. Cable guide/CIS unit

NOTE:
For disassembly of the inside of the unit, refer to the exploded view in the parts guide.

Parts list (Fig. 5)

No.	Part name	Qty
1	Mechanism unit	1
2	Screw (3x10)	1
3	Cable guide	1
4	Hook	2
5	CIS unit	1

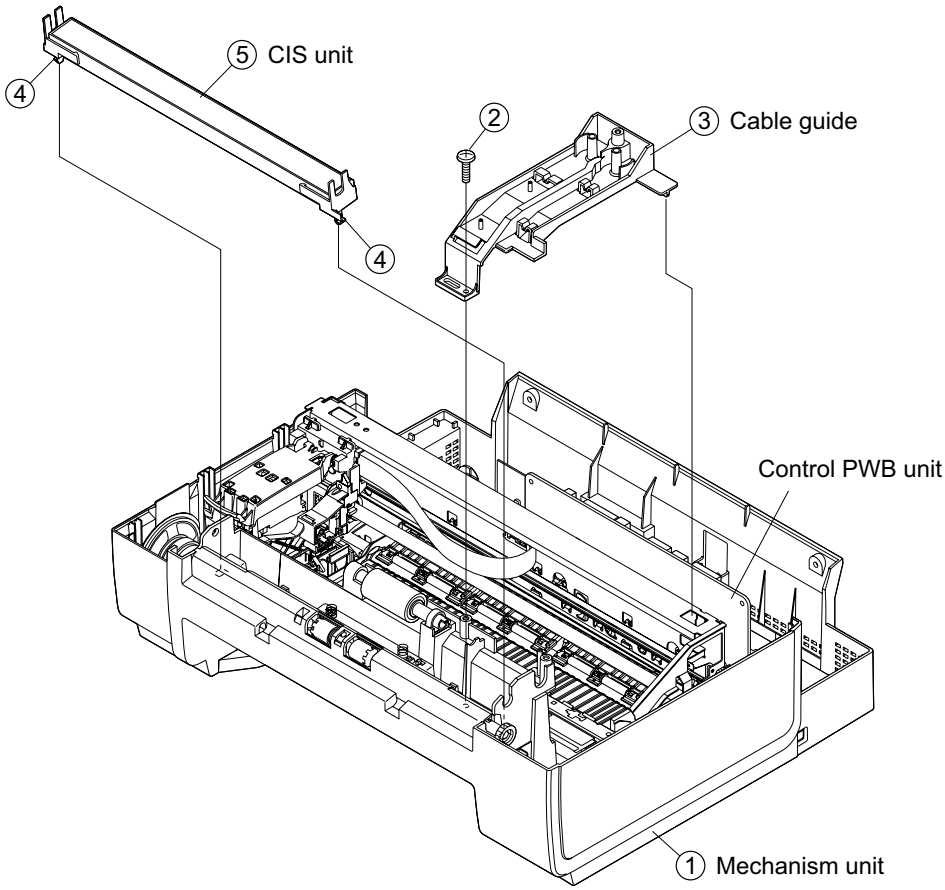

Fig.5

6. Control PWB unit/Printer unit

Parts list (Fig. 6)

No.	Part name	Qty	No.	Part name	Qty
1	Mechanism unit	1	7	Star wheel base unit	1
2	Connector	2	8	Printer exit upper plate	1
3	Flat cable	3	9	Printer PO roller	1
4	Screw (3x6)	3	10	Screw (3x10)	2
5	Control PWB unit	1	11	Screw (3x6)	1
6	Screw (3x10)	3	12	Printer unit	1

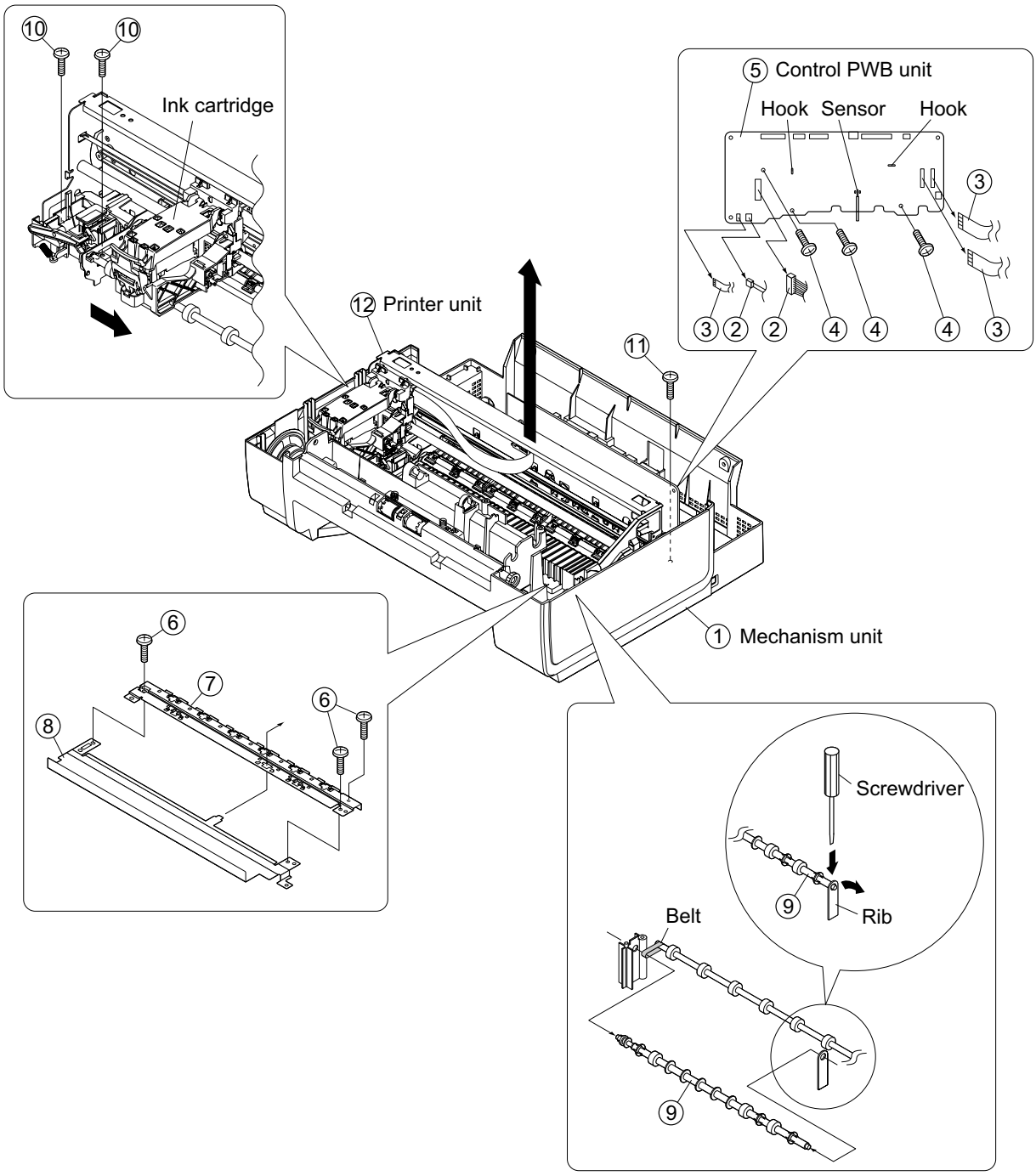

Fig.6

7. LIU PWB unit/Power supply PWB unit

Parts list (Fig. 7)

No.	Part name	Qty
1	Mechanism unit	1
2	Screw (3x10)	2
3	Screw (3x6)	1
4	LIU PWB unit	1
5	Screw (3x10)	1
6	Screw (3x6)	1
7	Screw (4x6)	1
8	Power supply PWB unit	1

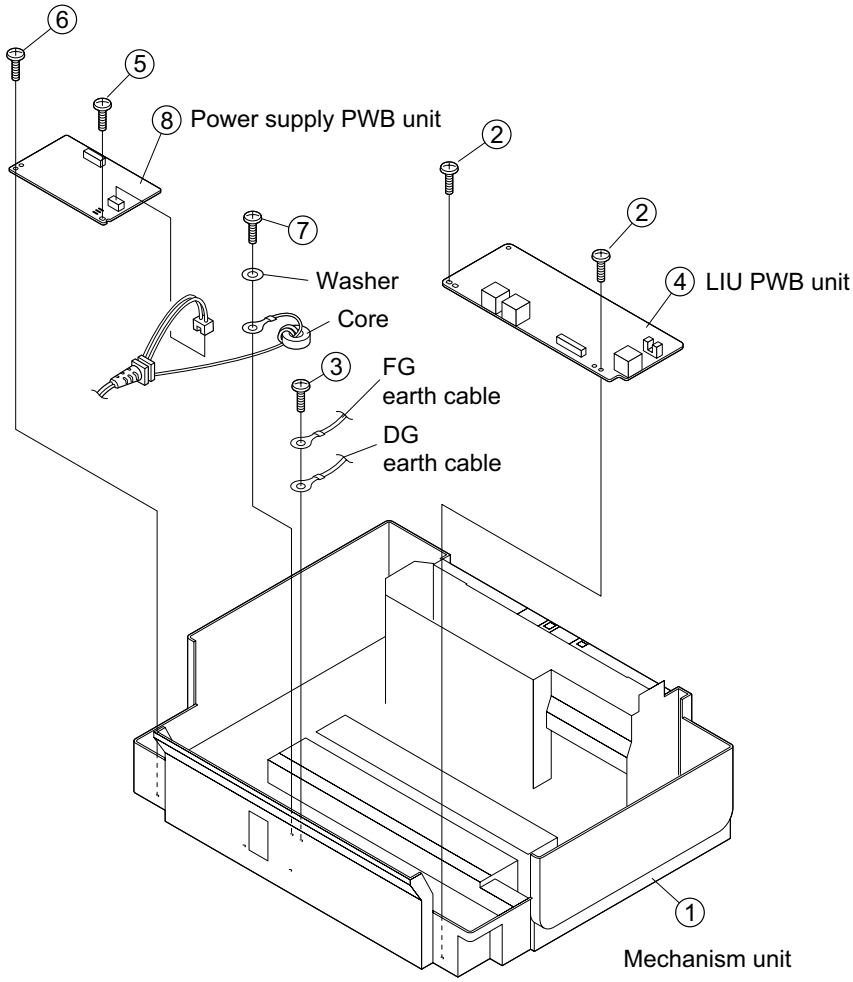

Fig.7

8. Wire treatment

Parts list (Fig. 8)

No.	Part name	Qty
1	Band(100mm)	1
2	Screw (4x6)	1
3	Screw (3x6)	1
4	Core(F2145)	3
5	Core(F2137)	1

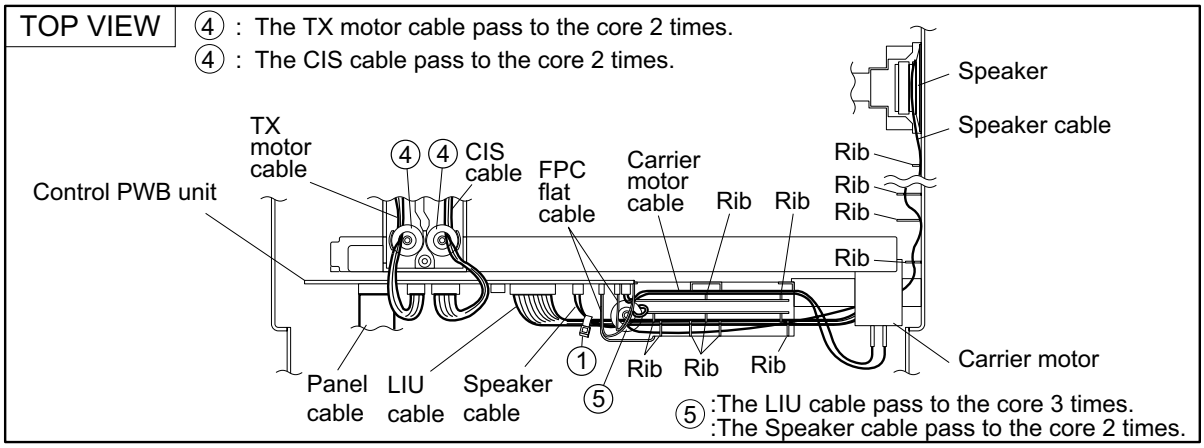

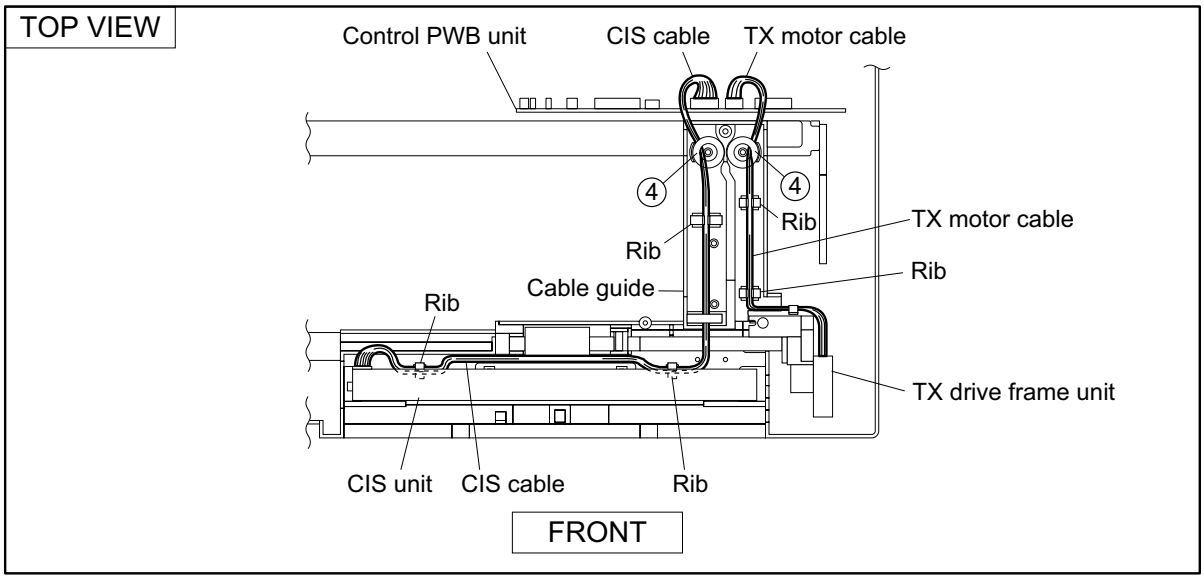

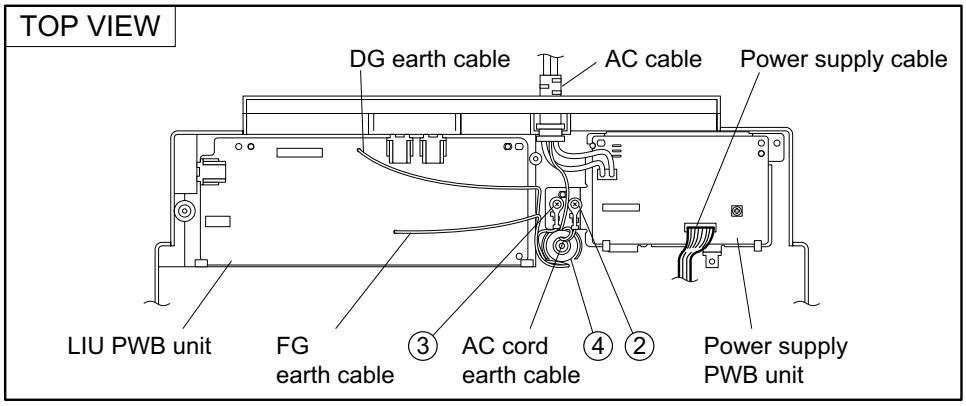

④ : The AC cord earth cable pass to the core 3 times.

Fig.8

CHAPTER 4. DIAGRAMS

[1] Block diagram

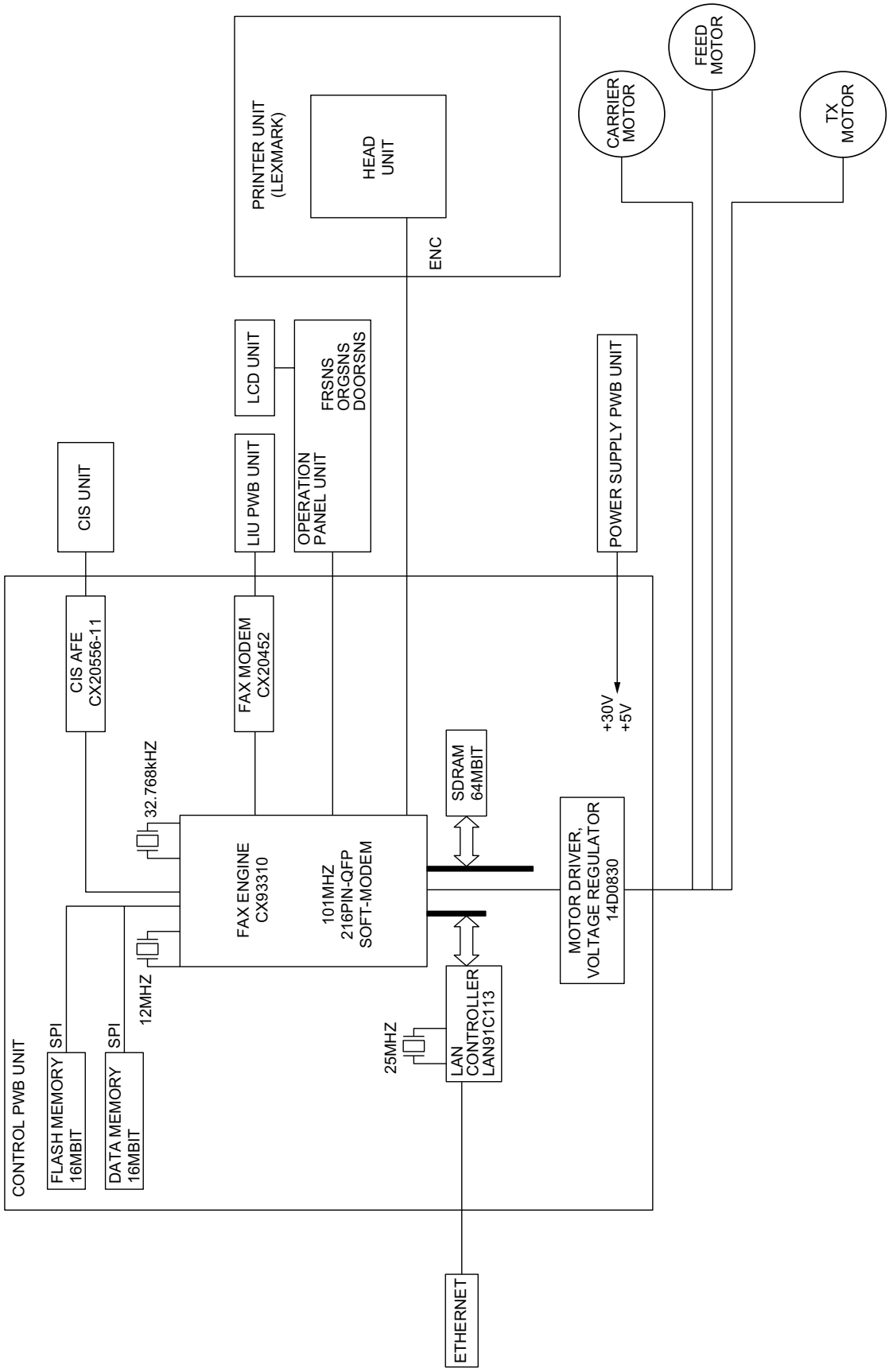

[2] Wiring diagram

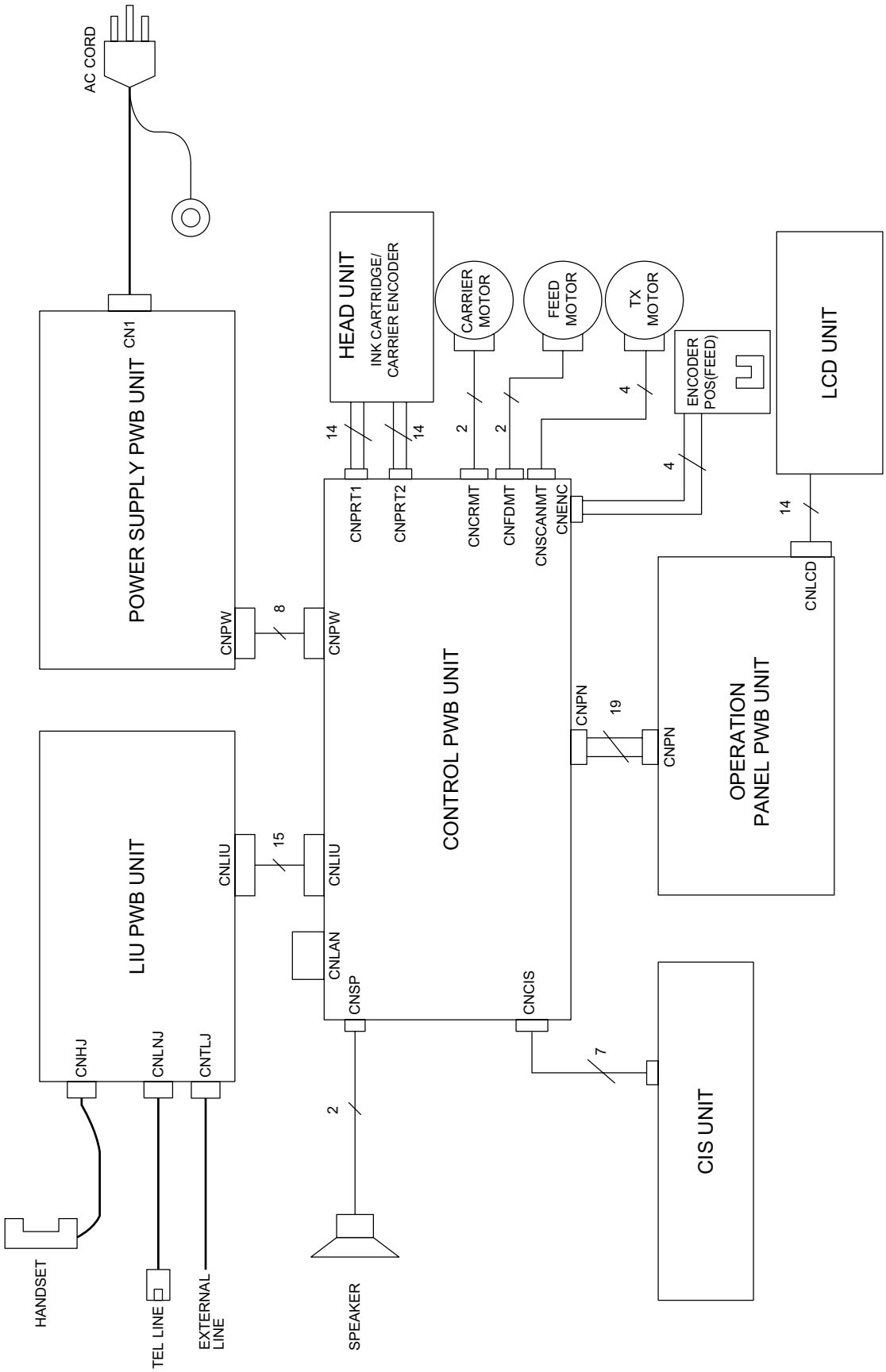

[3] Point-to-point diagram

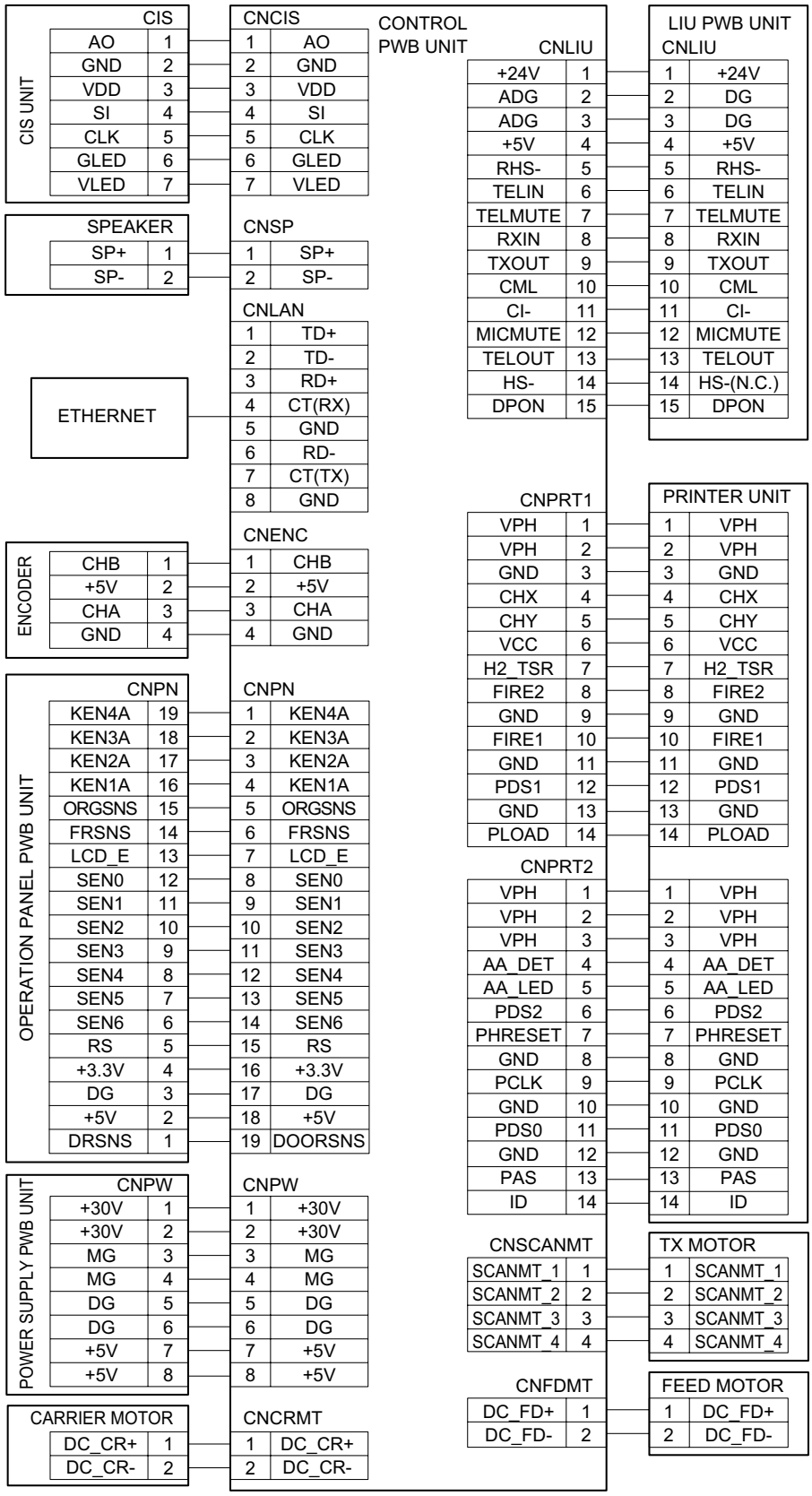

CHAPTER 5. CIRCUIT DESCRIPTION

[1] Circuit description

1. General description

The compact design of the control PWB is obtained by using CONEXANT fax engine in the main control section and high density printing of surface mounting parts. Each PWB is independent according to its function as shown in Fig. 1.

2. PWB configuration

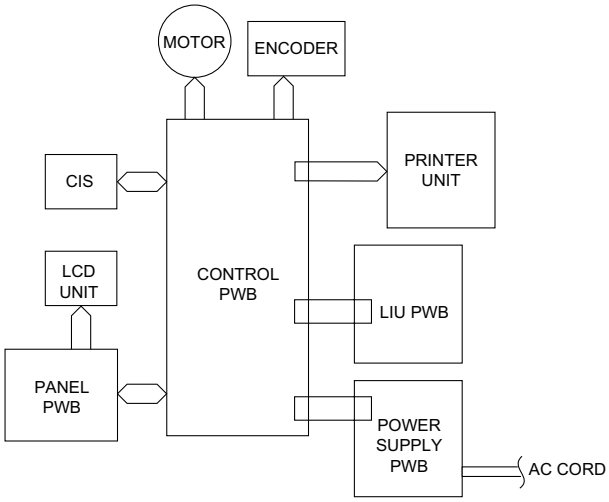

Fig.1

2.1. Control PWB

The Control PWB controls peripheral PWBs, mechanical parts, transmission, and performs overall control of the unit. This machine employs 1 chip fax engine (CX93310) which is installed on the Control PWB.

2.2. LIU PWB

This PWB controls connection of a telephone line to the unit.

2.3. Power supply PWB

This PWB provides voltages of +5V and +30V to the other PWBs.

2.4. Panel PWB

The panel PWB allows input of the operation keys.

2.5. LCD UNIT

This unit controls the LCD display.

3. Operational description

Operational descriptions are given below:

- Transmission operation

  When a document is loaded in stand-by mode, the state of the document sensor is sensed via the 1 chip fax engine (CX93310). With depression of the START key in the off-hook state, transmission takes place. Then, the procedure is sent out from the modem (CX20452) and the motor is rotated to move the document down to the scan line. In the scan processor, the signal scanned by the CIS is sent to the CX20556 to convert the analog signal into binary data. This binary data is transferred from the scan processor to the image buffer within the RAM and encoded and stored in the transmit buffer of the RAM. The data is then converted from parallel to serial form by the modem (CX20452) where the serial data is modulated and sent onto the line.

- Receive operation

  There are two ways of starting reception, manual and automatic. Depression of the START key in the off-hook mode in the case of manual receive mode, or CI signal detection by the LIU in the automatic receive mode. First, the CX93310 controls the procedure signals from the modem to be ready to receive data. When the program goes into phase C, the serial data from the modem is converted to parallel form in the modem interface of the 1 chip fax engine (CX93310) which is stored in the receive buffer of the RAM. The data in the receive buffer is decoded software-wise to reproduce it as binary image data in the image buffer. The data is sent to Printer unit by serial data. CX93310 controls printing system.

- Copy operation

  To make a copy on this facsimile, the COPY key is pressed when the machine is in stand-by with a document on the document table and the telephone set is in the on-hook state. First, depression of the COPY key advances the document to the scan line. Similar to the transmitting operation, the image signal from the CIS is converted to a binary signal in the DMA mode via the CX20556 which is then sent to the image buffer of the RAM. Next, the data is transferred to CX93310 and modify the data to send to Printer unit CX93310 controls Feed Motor and Carrier Motor.

[2] Circuit description of control PWB

1. General description

Fig. 2 shows the functional blocks of the control PWB, which is composed of 5 blocks.

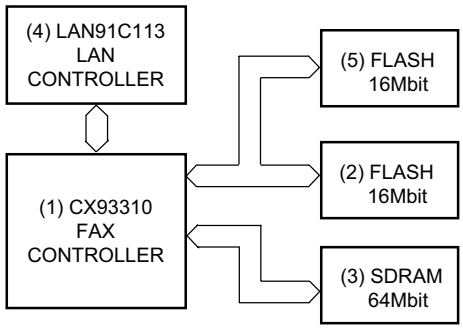

Fig. 2 Control PWB functional block diagram

2. Description of each block

2.1. Main control block

The main control block is composed of CONEXANT 1 chip fax engine (CX93310), FLASH (16Mbit), SDRAM (64Mbit), LAN Controller (LAN91C113).

Devices are connected to the bus to control the whole unit.

2.1.1 CX93310 (IC100): pin-216 LQFP (FAX CONTROLLER)

THis is a microcomputer with 32bit microprocessor core.

2.1.2 SST25VF016B (IC206): pin-8 SOIC (FLASH)

FLASH of 16Mbit equipped with software for the main CPU.

2.1.3 EDS6416AHTA-75-E (IC204): pin-54 TSOP (SDRAM)

On power on sequence, the firmware being compressed and stored in SDRAM memory (IC204) is decompressed to this device. After decompression, this device is used as a program execution memory. It is also used as various work memories and communication buffer etc.

2.1.4 LAN91C113 (IC702): pin-128 TQFP (LAN CONTROLLER)

The interface to LAN. It is connected with an external bus interface (8bit) of CX93310 (IC100).

2.1.5 SST25VF016B (IC201): pin-8 SOIC (FLASH)

For storage of data of various registration data and receiving image such as TEL No.

2.2. IC100 (CX93310) Hardware description

2.2.1 Features

- 32-bit CPU provides convenient functional customization
- Embedded Image Processing DSP
  - Scan noise removal
  - Dark level and shading correction
  - Linearization
  - Resolution conversion
  - Sharpening
  - Error diffusion
  - Background removal
  - JPEG and JBIG compression/decompression
- FlexIO^{TM} supports a variety of system configurations
  - CIS and CCD control
  - Scanner AFE control
  - Direct thermal, thermal transfer, inkjet and laser print engine direct control
  - Motor control
- ITU-T V.17 facsimile modem function, with T.30, T.4, T.6, T.42 support
- Sleep mode to reduce power consumption
- Real Time Clock with Battery Backup
- Single voltage (3.3V) power with internal voltage regulator
- 5V-tolerant IO ports
- Compact lead-free (Pb-free) packages
  - CX93310 Fax Engine Controller: 216-pin LQFP

2.2.2 System functions

1) Scan

Scanner control signals are provided by a FlexIO^{TM} port to support common CCD and CIS scanners. Digital scan data is also input over this interface from the external video data ADC device.

2) Print

Printer control signals are provided by a FlexIO port to support common direct thermal, thermal transfer, and inkjet print mechanisms.

3) Copy

Simultaneous scan and print operations provide a copy function, which includes support for image scaling (expansion to 200% and reduction to 33%).

4) GPIOs

General purpose inputs/outputs (GPIOs) are provided that may be used to support common interfaces such as an operator panel.

5) Modem

The embedded modem function provides synchronous 14400 bps half-duplex modem with error detection and DTMF generation/reception. It provides data transmission/reception from regular PSTN lines, PBX, or private lines, when interfaced to DAA (Data Access Arrangement) circuitry via the CONEXANT CXxxxxx Integrated Analog device.

The modem can operate at any standard V.17 data speed up to 14400 bps as well as in V.21 and V.23 modes.

The modem is designed for use in Group 3 facsimile machines. It satisfies the requirements specified in ITU-T recommendations V.17, V.29, V.27ter, V.21 Channel 2, and T.4, and meets the signaling requirements of T.30. It also performs HDLC framing according to T.30 at all speeds.

6) Concurrent operation

Several modes of concurrent operation are supported, such as scanning to memory while receiving/printing a facsimile reception, without operator intervention.

IC100: RH-IX2505XHPZ (CX93310) (1/4)

Pin No.	Pin Name	I/O	Def. I/O	5VT	Slew Rate	Drv. Stre.	Hys	PU/ PD	Description
Reset, Main Clock, Voltage Regulator and Test Mode									
5	RESET#	B	I	5VT		4	H	PU	Reset (active low)
12	XIN/EXTCLK	I	I						Crystal/Oscillator Input (10-60MHz)
13	XOUT	O	O						Crystal Output
7	VREG_CTRL	O	O						Voltage Regulator control output
8	VREG_ENABLE	I	I	5VT					Voltage Regulator Enable
6	TEST_MODE	I	I	5VT				PD	Test Mode
ARC JTAG									
1	JTAG_CPU_TCK	I	I	5VT				PU	ARC JTAG clock
2	JTAG_CPU_TDI	I	I	5VT				PU	ARC JTAG data in.
3	JTAG_CPU_TDO	O	O		S	8			ARC JTAG data out
4	JTAG_CPU_TMS	I	I	5VT				PU	ARC JTAG test mode
GPIO									
18	IOPIN_GRP_0[0]/GPIO[0]	B	I	5VT	S	16			General Purpose I/O
19	IOPIN_GRP_0[1]/GPIO[1]	B	I	5VT		4			General Purpose I/O
20	IOPIN_GRP_0[2]/GPIO[2]	B	I	5VT		4			General Purpose I/O
21	IOPIN_GRP_0[3]/GPIO[3]	B	I	5VT		4			General Purpose I/O
22	IOPIN_GRP_0[4]/GPIO[4]	B	I	5VT		4			General Purpose I/O
23	IOPIN_GRP_0[5]/GPIO[5]	B	I	5VT		4			General Purpose I/O
24	IOPIN_GRP_0[6]/GPIO[6]	B	I	5VT		4			General Purpose I/O
25	IOPIN_GRP_0[7]/GPIO[7]	B	I	5VT		4			General Purpose I/O
26	IOPIN_GRP_1[0]/GPIO[8]	B	I	5VT	S	8		PU	General Purpose I/O
27	IOPIN_GRP_1[1]/GPIO[9]	B	I	5VT	S	8		PU	General Purpose I/O
28	IOPIN_GRP_1[2]/GPIO[10]	B	I	5VT	S	8		PU	General Purpose I/O
29	IOPIN_GRP_1[3]/GPIO[11]	B	I	5VT	S	8		PU	General Purpose I/O
32	IOPIN_GRP_1[4]/GPIO[12]	B	I	5VT	S	8	H	PU	General Purpose I/O
33	IOPIN_GRP_1[5]/GPIO[13]	B	I	5VT	S	8	H	PU	General Purpose I/O
34	IOPIN_GRP_1[6]/GPIO[14]	B	I	5VT	S	8	H	U	General Purpose I/O
37	IOPIN_GRP_1[7]/GPIO[15]	B	I	5VT	S	8	H	U	General Purpose I/O
38	IOPIN_GRP_2[0]/GPIO[16]	B	I	5VT		4			General Purpose I/O
39	IOPIN_GRP_2[1]/GPIO[17]	B	I	5VT		4			General Purpose I/O
40	IOPIN_GRP_2[2]/GPIO[18]	B	I	5VT		4			General Purpose I/O
41	IOPIN_GRP_2[3]/GPIO[19]	B	I	5VT		4			General Purpose I/O
42	IOPIN_GRP_2[4]/GPIO[20]	B	I	5VT		4			General Purpose I/O
43	IOPIN_GRP_2[5]/GPIO[21]	B	I	5VT		4			General Purpose I/O
44	IOPIN_GRP_2[6]/GPIO[22]	B	I	5VT		4			General Purpose I/O
47	IOPIN_GRP_2[7]/GPIO[23]	B	I	5VT		4			General Purpose I/O
48	IOPIN_GRP_3[0]/GPIO[24]	B	I	5VT	S	16			General Purpose I/O
49	IOPIN_GRP_3[1]/GPIO[25]	B	I	5VT		4			General Purpose I/O
50	IOPIN_GRP_3[2]/GPIO[26]	B	I	5VT		4			General Purpose I/O
51	IOPIN_GRP_3[3]/GPIO[27]	B	I	5VT		4			General Purpose I/O
52	IOPIN_GRP_3[4]/GPIO[28]	B	I	5VT		4			General Purpose I/O
53	IOPIN_GRP_3[5]/GPIO[29]	B	I	5VT		4			General Purpose I/O
54	IOPIN_GRP_3[6]/GPIO[30]	B	I	5VT		4			General Purpose I/O
55	IOPIN_GRP_3[7]/GPIO[31]	B	I	5VT		4			General Purpose I/O
56	IOPIN_GRP_4[0]/GPIO[32]	B	I	5VT		4			General Purpose I/O
57	IOPIN_GRP_4[1]/GPIO[33]	B	I	5VT		4			General Purpose I/O
58	IOPIN_GRP_4[2]/GPIO[34]	B	I	5VT		4			General Purpose I/O
59	IOPIN_GRP_4[3]/GPIO[35]	B	I	5VT		4			General Purpose I/O
62	IOPIN_GRP_4[4]/GPIO[36]	B	I	5VT		4	H		General Purpose I/O
63	IOPIN_GRP_4[5]/GPIO[37]	B	I	5VT		4	H		General Purpose I/O
64	IOPIN_GRP_4[6]/GPIO[38]	B	I	5VT		4	H		General Purpose I/O
65	IOPIN_GRP_4[7]/GPIO[39]	B	I	5VT		4			General Purpose I/O
66	IOPIN_GRP_5[0]/GPIO[40]	B	I	5VT	S	8			General Purpose I/O
67	IOPIN_GRP_5[1]/GPIO[41]	B	I	5VT	S	8			General Purpose I/O
68	IOPIN_GRP_5[2]/GPIO[42]	B	I	5VT	S	8			General Purpose I/O
69	IOPIN_GRP_5[3]/GPIO[43]	B	I	5VT	S	8			General Purpose I/O

IC100: RH-IX2505XHPZ (CX93310) (2/4)

Pin No.	Pin Name	I/O	Def. I/O	5VT	Slew Rate	Drv. Stre.	Hys	PU/ PD	Description
70	IOPIN_GRP_5[4]/GPIO[44]	B	I	5VT	S	8			General Purpose I/O
71	IOPIN_GRP_5[5]/GPIO[45]	B	I	5VT	S	8			General Purpose I/O
72	IOPIN_GRP_5[6]/GPIO[46]	B	I	5VT	S	8			General Purpose I/O
75	IOPIN_GRP_5[7]/GPIO[47]	B	I	5VT	S	8			General Purpose I/O
76	IOPIN_GRP_6[0]/GPIO[48]	B	I	5VT	S	16			General Purpose I/O
79	IOPIN_GRP_6[1]/GPIO[49]	B	I	5VT		4			General Purpose I/O
80	IOPIN_GRP_6[2]/GPIO[50]	B	I	5VT		4			General Purpose I/O
81	IOPIN_GRP_6[3]/GPIO[51]	B	I	5VT		4			General Purpose I/O
82	IOPIN_GRP_6[4]/GPIO[52]	B	I	5VT		4			General Purpose I/O
83	IOPIN_GRP_6[5]/GPIO[53]	B	I	5VT		4			General Purpose I/O
84	IOPIN_GRP_6[6]/GPIO[54]	B	I	5VT		4			General Purpose I/O
85	IOPIN_GRP_6[7]/GPIO[55]	B	I	5VT		4			General Purpose I/O
86	IOPIN_GRP_7[0]/GPIO[56]	B	I	5VT		4			General Purpose I/O
89	IOPIN_GRP_7[1]/GPIO[57]	B	I	5VT		4			General Purpose I/O
90	IOPIN_GRP_7[2]/GPIO[58]	B	I	5VT		4			General Purpose I/O
91	IOPIN_GRP_7[3]/GPIO[59]	B	I	5VT		4			General Purpose I/O
92	IOPIN_GRP_7[4]/GPIO[60]	B	I	5VT		4	H		General Purpose I/O
93	IOPIN_GRP_7[5]/GPIO[61]	B	I	5VT		4	H		General Purpose I/O
94	IOPIN_GRP_7[6]/GPIO[62]	B	I	5VT		4	H		General Purpose I/O
97	IOPIN_GRP_7[7]/GPIO[63]	B	I	5VT		4	H		General Purpose I/O
98	IOPIN_GRP_8[0]/GPIO[64]	B	I	5VT	S	8			General Purpose I/O
99	IOPIN_GRP_8[1]/GPIO[65]	B	I	5VT	S	8			General Purpose I/O
100	IOPIN_GRP_8[2]/GPIO[66]	B	I	5VT	S	8			General Purpose I/O
101	IOPIN_GRP_8[3]/GPIO[67]	B	I	5VT	S	8			General Purpose I/O
102	IOPIN_GRP_8[4]/GPIO[68]	B	I	5VT	S	8			General Purpose I/O
103	IOPIN_GRP_8[5]/GPIO[69]	B	I	5VT	S	8			General Purpose I/O
104	IOPIN_GRP_8[6]/GPIO[70]	B	I	5VT	S	8			General Purpose I/O
105	IOPIN_GRP_8[7]/GPIO[71]	B	I	5VT	S	8			General Purpose I/O
106	IOPIN_GRP_9[0]/GPIO[72]	B	I	5VT	S	16			General Purpose I/O
107	IOPIN_GRP_9[1]/GPIO[73]	B	I	5VT		4			General Purpose I/O
108	IOPIN_GRP_9[2]/GPIO[74]	B	I	5VT		4			General Purpose I/O
109	IOPIN_GRP_9[3]/GPIO[75]	B	I	5VT		4			General Purpose I/O
112	IOPIN_GRP_9[4]/GPIO[76]	B	I	5VT		4			General Purpose I/O
113	IOPIN_GRP_9[5]/GPIO[77]	B	I	5VT		4			General Purpose I/O
114	IOPIN_GRP_9[6]/GPIO[78]	B	I	5VT		4			General Purpose I/O
115	IOPIN_GRP_9[7]/GPIO[79]	B	I	5VT		4			General Purpose I/O
116	IOPIN_GRP_10[0]/GPIO[80]	B	I	5VT	S	8			General Purpose I/O
117	IOPIN_GRP_10[1]/GPIO[81]	B	I	5VT	S	8			General Purpose I/O
118	IOPIN_GRP_10[2]/GPIO[82]	B	I	5VT	S	8			General Purpose I/O
119	IOPIN_GRP_10[3]/GPIO[83]	B	I	5VT	S	8			General Purpose I/O
120	IOPIN_GRP_10[4]/GPIO[84]	B	I	5VT	S	8	H		General Purpose I/O
121	IOPIN_GRP_10[5]/GPIO[85]	B	I	5VT	S	8	H		General Purpose I/O
122	IOPIN_GRP_10[6]/GPIO[86]	B	I	5VT	S	8	H		General Purpose I/O
123	IOPIN_GRP_10[7]/GPIO[87]	B	I	5VT	S	8	H		General Purpose I/O
124	IOPIN_GRP_11[0]/GPIO[88]	B	I	5VT		4			General Purpose I/O
129	IOPIN_GRP_11[1]/GPIO[89]	B	I	5VT		4			General Purpose I/O
130	IOPIN_GRP_11[2]/GPIO[90]	B	I	5VT		4			General Purpose I/O
131	IOPIN_GRP_11[3]/GPIO[91]	B	I	5VT		4			General Purpose I/O
132	IOPIN_GRP_11[4]/GPIO[92]	B	I	5VT		4			General Purpose I/O
133	IOPIN_GRP_11[5]/GPIO[93]	B	I	5VT		4			General Purpose I/O
134	IOPIN_GRP_11[6]/GPIO[94]	B	I	5VT		4			General Purpose I/O
135	IOPIN_GRP_11[7]/GPIO[95]	B	I	5VT		4			General Purpose I/O
136	GPIO_116_96[0]/GPIO[96]	B	I	5VT	S	8			General Purpose I/O
137	GPIO_116_96[1]/GPIO[97]	B	I	5VT	S	8			General Purpose I/O
138	GPIO_116_96[2]/GPIO[98]	B	I	5VT	S	8			General Purpose I/O
139	GPIO_116_96[3]/GPIO[99]	B	I	5VT	S	8			General Purpose I/O
140	GPIO_116_96[4]/GPIO[100]	B	I	5VT	S	8		PU	General Purpose I/O

IC100: RH-IX2505XHPZ (CX93310) (3/4)

Pin No.	Pin Name	I/O	Def. I/O	5VT	Slew Rate	Drv. Stre.	Hys	PU/ PD	Description
141	GPIO_116_96[5]/GPIO[101]	B	I	5VT	S	8		PU	General Purpose I/O
142	GPIO_116_96[6]/GPIO[102]	B	I	5VT	S	8			General Purpose I/O
147	GPIO_116_96[7]/GPIO[103]	B	I	5VT	S	8			General Purpose I/O
148	GPIO_116_96[8]/GPIO[104]	B	I	5VT	S	8		PU	General Purpose I/O
149	GPIO_116_96[9]/GPIO[105]	B	I	5VT	S	8		PU	General Purpose I/O
150	GPIO_116_96[10]/GPIO[106]	B	I	5VT	S	8		PU	General Purpose I/O
151	GPIO_116_96[11]/GPIO[107]	B	I	5VT	S	16			General Purpose I/O
152	GPIO_116_96[12]/GPIO[108]	B	I	5VT		4	H	PU	General Purpose I/O
153	GPIO_116_96[13]/GPIO[109]	B	I	5VT		4	H	PU	General Purpose I/O
154	GPIO_116_96[14]/GPIO[110]	B	I	5VT		4		PU	General Purpose I/O
155	GPIO_116_96[15]/GPIO[111]	B	I	5VT		4			General Purpose I/O
156	GPIO_116_96[16]/GPIO[112]	B	I	5VT		4			General Purpose I/O
157	GPIO_116_96[17]/GPIO[113]	B	I	5VT		4			General Purpose I/O
158	GPIO_116_96[18]/GPIO[114]	B	I	5VT		4			General Purpose I/O
161	GPIO_116_96[19]/GPIO[115]	B	I	5VT		4			General Purpose I/O
162	GPIO_116_96[20]/GPIO[116]	B	I	5VT		4			General Purpose I/O
SDR SDRAM Interface									
163	DQ[0]	B	I	5VT		8			SDRAM Data
164	DQ[1]	B	I	5VT		8			SDRAM Data
165	DQ[2]	B	I	5VT		8			SDRAM Data
166	DQ[3]	B	I	5VT		8			SDRAM Data
167	DQ[4]	B	I	5VT		8			SDRAM Data
168	DQ[5]	B	I	5VT		8			SDRAM Data
169	DQ[6]	B	I	5VT		8			SDRAM Data
172	DQ[7]	B	I	5VT		8			SDRAM Data
173	DQ[15]	B	I	5VT		8			SDRAM Data
174	DQ[14]	B	I	5VT		8			SDRAM Data
175	DQ[13]	B	I	5VT		8			SDRAM Data
176	DQ[12]	B	I	5VT		8			SDRAM Data
177	DQ[11]	B	I	5VT		8			SDRAM Data
178	DQ[10]	B	I	5VT		8			SDRAM Data
179	DQ[9]	B	I	5VT		8			SDRAM Data
182	DQ[8]	B	I	5VT		8			SDRAM Data
183	DQM[1]	O	O			8			SDRAM Data Mask
184	DQM[2]	O	O			8			SDRAM Data Mask
185	CLK	O	O			12			SDRAM Clock
186	CKE	O	O			8			SDRAM Clock Enable
187	WE#	O	O			8			SDRAM Write Enable
188	CAS#	O	O			8			SDRAM Column Address Select
189	RAS#	O	O			8			SDRAM Row Address Select
194	BA[0]	O	O			8			SDRAM Bank Active
195	BA[1]	O	O			8			SDRAM Bank Active
196	M_ADDR[0]	O	O			8			SDRAM Address
197	M_ADDR[1]	O	O			8			SDRAM Address
198	M_ADDR[2]	O	O			8			SDRAM Address
199	M_ADDR[3]	O	O			8			SDRAM Address
200	M_ADDR[12]	O	O			8			SDRAM Address
201	M_ADDR[11]	O	O			8			SDRAM Address
204	M_ADDR[10]	O	O			8			SDRAM Address
205	M_ADDR[9]	O	O			8			SDRAM Address
206	M_ADDR[8]	O	O			8			SDRAM Address
207	M_ADDR[7]	O	O			8			SDRAM Address
208	M_ADDR[6]	O	O			8			SDRAM Address
209	M_ADDR[5]	O	O			8			SDRAM Address
210	M_ADDR[4]	O	O			8			SDRAM Address

IC100: RH-IX2505XHPZ (CX93310) (4/4)

Pin No.	Pin Name	I/O	Def. I/O	5VT	Slew Rate	Drv. Stre.	Hys	PU/ PD	Description
Real Time Clock									
211	VDD_RTC	PWR							3.3V Battery Power
212	RTC_XIN	I	I						32KHz Crystal/Oscillator input
213	RTC_XOUT	O	O						32KHz Crystal output
214	CORE_PWR_DET	I	I				H		Power detection signal
215	BATRST#	I	I				H		Battery reset (active low)
216	VSS_RTC	GND							Battery Ground
Power and Ground									
9	VREG_VDD	PWR							3.3V Voltage Regulator Power
10	AVSS/ARCPLL_VSS	GND							Voltage Regulator Ground/PLL Ground
11	ARCPLL_VDD	PWR							1.25V PLL Power
17 35 73 87 128 143 193	CORE_VDD	PWR							1.25V Core Power
14 31 45 60 68 78 95 110 125 146 159 170 190 202	IO_VDD	PWR							3.3V Power
16 36 74 88 127 144 192	CORE_VSS	GND							Core Ground
15 30 46 61 77 96 111 126 145 160 171 180 181 191 203	IO_VSS	GND							I/O Ground

2.3. IC301 (CX20452) Modem block

2.3.1 Summary

The CONEXANT CX20452 Codec is an Integrated Analog (IA) circuit providing modem digital-to-analog and analog-to-digital conversion. It is packaged in a 24-pin QFN. Ordering information is listed in Table 1-1.

The CX20452 Codec can serve as a line interface device between a CONEXANT® Modem Data Pump (MDP) and the PSTN. It can also serve as a voice interface between the MDP and a microphone and speaker.

The MDP communicates with the CX20452 Codec via a serial interface. The CX20452 Codec has an 8-bit register that is used to configure the device. This register may be written to or read from via the serial interface.

The CX20452 Codec receive path consists of line and microphone gain stages, line-input and mic-input anti-aliasing filters, a second order delta-sigma ADC, and a third-order sinc decimation filter. The transmit path consists of a third-order interpolation filter, a second-order delta-sigma DAC, a first-order lowpass switched capacitor filter, a second order lowpass continuous-time filter, a line-output driver, and a speaker-output driver. It has its own control registers, timing logic, serial interface, references, and microphone bias circuit.

The device is designed to run at a clock rate of 1.9584 MHz. Adjustable oversampling ratios (OSRs) are provided to allow for other master clock frequencies. Local and remote loopbacks are available for functionality and ease of testing.

The CX20452 Codec operates with digital power supply (VDD) and analog power supply (AVDD) = 3.3 V.

Order No./Part No.	Package
CX20452-A	24-Pin QFN / Pb free

Table 1-1. Ordering Information

2.3.2 Functional description

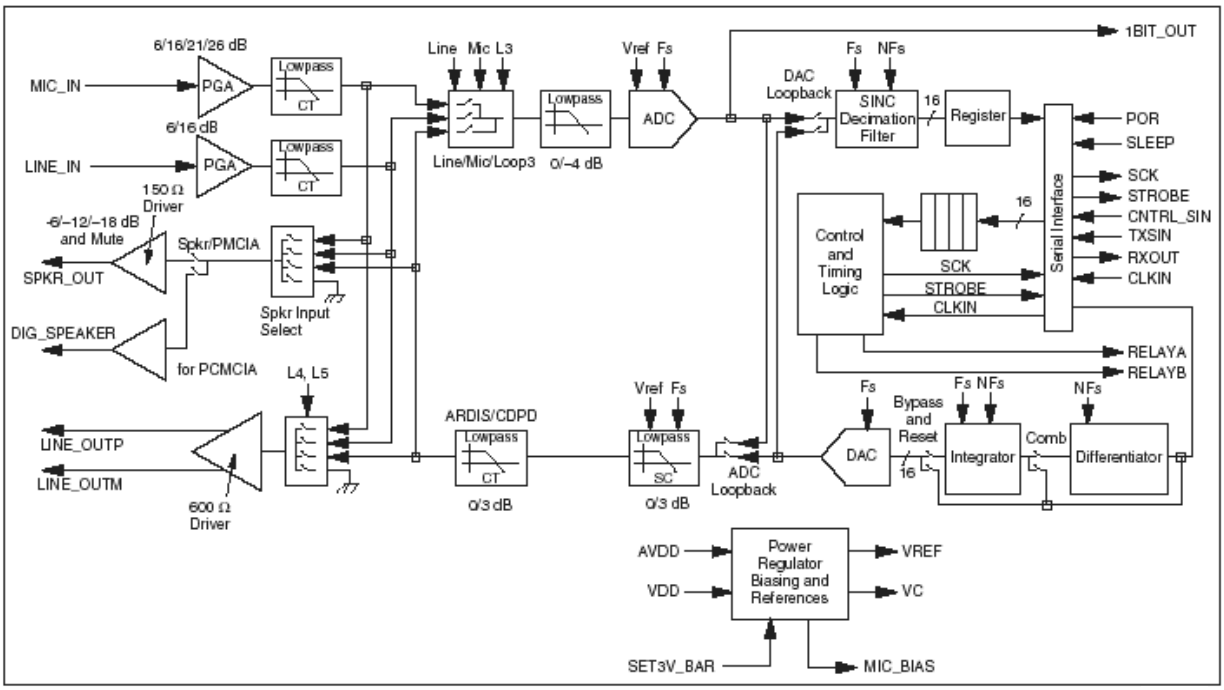

Fig. 3

1) Microphone input

This input provides programmable gain for a microphone signal and low pass filtering to avoid aliasing before the signal is converted into a digital format. The microphone can be connected to this device as single-ended. A programmable gain amplifier provides four selectable gain settings from 6 to 26 dB, in steps of 5 dB. The input impedance is 150 kΩ minimum.

2) Line input

This input provides low pass filtering to avoid aliasing before the signal is converted into a digital format. The line input is single-ended and must be AC coupled into the device. The filter structure realizes a two-pole LPF filter. The gain on the line input is selectable at 6dB or 16dB. The input impedance is 150 kΩ minimum. Either Line input or Microphone input can be selected.

3) A/D converter

The ADC input provides a 0/-4 dBm low pass filter. The ADC is a second order sigma-delta type ADC which samples at a rate between 1.024 MHz and 2.048 MHz to produce a programmable baseband sample, depending on the decimation ratio programmed in the decimation filter and the clock value.

4) D/A converter

The incoming digital signal from the MDP is fed to a low pass interpolation filter and then to a second order delta-sigma type DAC. The DAC analog output drivers a switched capacitor analog filter. The output of this filter is passed to a passive continuous-time second order low pass filter that removes signal images around the switched capacitor clock frequency.

5) Speaker output

The SPKR_OUT output signal can drive a 150 Ω resistive load. The speaker driver is intended to buffer and drive the low impedance speaker load with the signal selected on its input. The microphone input, or the line input, or the transmit output signal can be selected to be the speaker output. The speaker driver output can be attenuated or muted. It also has power down mode.

6) Line output

The main purpose of the line output stage is to buffer the signal and drive the low impedance line load with the signal selected on its input. The microphone input, or the line input, or the transmit output signal can be selected to be the line output. The line drive provides a 600 Ω differential output.

7) Power up condition

Upon application of the both AVDD and VDD power, the power up sequence consists of:

1. the internal reset circuit becoming activated.
2. The VREF and VC generators powering up.

This power-on sequence takes approximately 50ms.

2.4. IC702 (LAN91C113) Hardware description

2.4.1 General description

The SMSC LAN91C113 is designed to facilitate the implementation of a third generation of Fast Ethernet connectivity solutions for embedded applications. For this third generation of products, flexibility and integration dominate the design requirements. The LAN91C113 is a mixed signal Analog/Digital device that implements the MAC and PHY portion of the CSMA/CD protocol at 10 and 100 Mbps. The design will also minimize data throughput constraints utilizing a 16-bit or 8-bit bus Host interface in embedded applications.

The total internal memory FIFO buffer size is 8 Kbytes, which is the total chip storage for transmit and receive operations.

The SMSC LAN91C113 is software compatible with the LAN9000 family of products.

Memory management is handled using a patented optimized MMU (Memory Management Unit) architecture and a 16-bit wide internal data path. This I/O mapped architecture can sustain back-to-back frame transmission and reception for superior data throughput and optimal performance. It also dynamically allocates buffer memory in an efficient buffer utilization scheme, reducing software tasks and relieving the host CPU from performing these housekeeping functions.

The SMSC 91C113 provides a flexible slave interface for easy connectivity with industry-standard buses. The Bus Interface Unit (BIU) can handle synchronous as well as asynchronous transfers, with different signals being used for each one. Asynchronous bus support for ISA is supported even though ISA cannot sustain 100 Mbps traffic. Fast Ethernet data rates are attainable for ISA-based nodes on the basis of the aggregate traffic benefits.

Two different interfaces are supported on the network side. The first Interface is a standard Magnetics transmit/receive pair interfacing to 10/100Base-T utilizing the internal physical layer block. The second interface follows the MII (Media Independent Interface) specification standard, consisting of 4 bit wide data transfers at the nibble rate. This interface is applicable to 10 Mbps standard Ethernet or 100 Mbps Ethernet networks. Three of the LAN91C113's pins are used to interface to the two-line MII serial management protocol.

The SMSC LAN91C113 integrates IEEE 802.3 Physical Layer for twisted pair Ethernet applications. The PHY can be configured for either 100 Mbps (100Base-TX) or 10 Mbps (10Base-T) Ethernet operation. The Analog PHY block consists of a 4B5B>Manchester encoder/decoder, scrambler/descrambler, transmitter with wave shaping and output driver, twisted pair receiver with on chip equalizer and baseline wander correction, clock and data recovery, Auto-Negotiation, controller interface (MII), and serial port (MI). Internal output wave shaping circuitry and on-chip filters eliminate the need for external filters normally required in 100Base-TX and 10Base-T applications.

The LAN91C113 can automatically configure itself for 100 or 10 Mbps and Full or Half Duplex operation with the on-chip Auto-Negotiation algorithm. The LAN91C113 is ideal for media interfaces for embedded application desiring Ethernet connectivity as well as 100Base-TX/10Base-T adapter cards, motherboards, repeaters, switching hubs. The LAN91C113 operates from a single 3.3V supply. The inputs and outputs of the host interface are 5V tolerant and will directly interface to other 5V devices.

2.4.2 Description of pin functions

IC702: VHILN91C113-1 (LAN91C113)

PIN NO.		NAME	SYMBOL	BUFFER TYPE	DESCRIPTION
TQFP	QFP				
81-92	83-94	Address	A4-A15	I**	Input. Decoded by LAN91C113 to determine access to its registers.
78-80	80-82	Address	A1-A3	I**	Input. Used by LAN91C113 for internal register selection.
41	43	Address Enable	AEN	I**	Input. Used as an address qualifier. Address decoding is only enabled when AEN is low.

PIN NO.		NAME	SYMBOL	BUFFER TYPE	DESCRIPTION
TQFP	QFP				
94-95	96-97	nByte Enable	nBE0-nBE1	I**	Input. Used during LAN91C113 register accesses to determine the width of the access and the register(s) being accessed.
107-104, 102-99, 76-73, 71-68	109-106, 104-101, 78-75, 73-70	Data Bus	D0-D15	I/O24**	Bidirectional. 16 bit data bus used to access the LAN91C113's internal registers. Data bus has weak internal pullups. Supports direct connection to the system bus without external buffering.
30	32	Reset	RESET	IS**	Input. When this pin is asserted high, the controller performs an internal system (MAC & PHY) reset. It programs all the registers to their default value, the controller will read the EEPROM device through the EEPROM interface. (Note 5.1) This input is not considered active unless it is active for at least 100ns to filter narrow glitches.
37	39	nAddress Strobe	nADS	IS**	Input. For systems that require address latching, the rising edge of nADS indicates the latching moment for A1-A15 and AEN. All LAN91C113 internal functions of A1-A15, AEN are latched except for nLDEV decoding.
35	37	nCycle	nCYCLE	I**	Input. This active low signal is used to control LAN91C113 synchronous bus cycles. For write operation, this signal should be asserted one bus clock prior to data valid. For read operation, this signal should be asserted two bus clocks prior to data valid.
36	38	Write/nRead	W/nR	IS**	Input. Defines the direction of synchronous cycles. Write cycles when high, read cycles when low.
40	42	nVL Bus Access	nVLBUS	I with pullup**	Input. When low, the LAN91C113 synchronous bus interface is configured for Local Bus mode accesses. Otherwise, the LAN91C113 is configured for EISA accesses. Does not affect the asynchronous bus interface.
42	44	Local Bus Clock	LCLK	I**	Input. Used to interface synchronous buses. Maximum frequency is 50 MHz. This pin should be tied high if it is in asynchronous mode.
38	40	Asynchronous Ready	ARDY	OD16	Open drain output. ARDY may be used when interfacing asynchronous buses to extend accesses. Its rising (access completion) edge is controlled by the XTAL1 clock and, therefore, asynchronous to the host CPU or bus clock.
43	45	nSynchronous Ready	nSRDY	O16	Output. This output is used when interfacing synchronous buses and nVLBUS=0 to extend accesses. This signal remains normally inactive, and its falling edge indicates completion. This signal is synchronous to the bus clock LCLK.
46	48	nReady Return	nRDYRTN	I**	Input. This input is used to complete synchronous read cycles.
29	31	Interrupt	INTR0	O24	Interrupt Output - Used to interrupt the Host on a status event. Note: The selection bits used to determined by the value of INT SEL 1-0 bits in the Configuration Register are no longer required and have been set to reserved in this revision of the FEAST family of devices.
45	47	nLocal Device	nLDEV	O16	Output. This active low output is asserted when AEN is low and A4-A15 decode to the LAN91C113 address programmed into the high byte of the Base Address Register. nLDEV is a combinatorial decode of unlatched address and AEN signals.
31	33	nRead Strobe	nRD	IS**	Input. Used in asynchronous bus interfaces.
32	34	nWrite Strobe	nWR	IS**	Input. Used in asynchronous bus interfaces.
9	11	EEPROM Clock	EESK	O4	Output. 4 usec clock used to shift data in and out of the serial EEPROM.
10	12	EEPROM Select	EECS	O4	Output. Serial EEPROM chip select. Used for selection and command framing of the serial EEPROM.
7	9	EEPROM Data Out	EEDO	O4	Output. Connected to the DI input of the serial EEPROM.
8	10	EEPROM Data In	EEDI	I with pull-down**	Input. Connected to the DO output of the serial EEPROM.

PIN NO.		NAME	SYMBOL	BUFFER TYPE	DESCRIPTION
TQFP	QFP				
3-5	5-7	I/O Base	IOS0-IOS2	I with pul-lup**	Input. External switches can be connected to these lines to select between predefined EEPROM configurations.
6	8	Enable EEPROM	ENEEP	I with pul-lup**	Input. Enables (when high or open) LAN91C113 accesses to the serial EEPROM. Must be grounded if no EEPROM is connected to the LAN91C113.
127, 128	1, 2	Crystal 1 Crystal 2	XTAL1 XTAL2	Iclk	An external 25 MHz crystal is connected across these pins. If a TTL clock is supplied instead, it should be connected to XTAL1 and XTAL2 should be left open.
1, 33, 44, 62, 77, 98, 110, 120, 96, 97	3, 35, 46, 64, 79, 100, 112, 122, 98, 99	Power	VDD	-	+3.3V Power supply pins.
11, 16	13, 18	Analog Power	AVDD	-	+3.3V Analog power supply pins.
24, 39, 52, 57, 67, 72, 93, 103, 108, 117	26, 41, 54, 59, 69, 74, 95, 105, 110, 119	Ground	GND	-	Ground pins.
13, 19	15, 21	Analog Ground	AGND	-	Analog Ground pins
21	23	Loopback	O4	-	Output. Active when LOOP bit is set (TCR bit 1).
20	22	nLink Status	nLNK	I with pullup	Input General-purpose input port used to convey LINK status (EPHSR bit 14).
28	30	nCNTRL	nCNTRL	O12	General Purpose Control Pin
47	49	X25out	X25out	O12	25Mhz Output to external PHY
111	113	Transmit Enable 100 Mbps	TXEN100	O12	Output to MII PHY. Envelope to 100 Mbps transmission.
119	121	Carrier Sense 100 Mbps	CRS100	I with pull-down	Input from MII PHY. Envelope of packet reception used for deferral and backoff purposes.
125	127	Receive Data Valid	RX_DV	I with pull-down	Input from MII PHY. Envelope of data valid reception. Used for receive data framing.
112	114	Collision Detect 100 Mbps	COL100	I with pull-down	Input from MII PHY. Collision detection input.
113-116	115-118	Transmit Data	TXD3-TXD0	O12	Outputs. Transmit Data nibble to MII PHY.
109	111	Transmit Clock	TX25	I with pullup	Input. Transmit clock input from MII. Nibble rale clock (25MHz for 100Mbps & 2.5MHz for 10Mbps).
118	120	Receive Clock	RX25	I with pullup	Input. Receive clock input from MII PHY. Nibble rate clock. (25MHz for 100Mbps & 2.5MHz for 10Mbps).
121-124	123-126	Receive Data	RXD3-RXD0	I with pullup	Inputs. Received Data nibble from MII PHY.
25	27	Management Data Input	MDI	I with pull-down	MII management data input.
26	28	Management Data Output	MDO	O4	MII management data output.
27	29	Management Clock	MCLK	O4	MII management clock.
126	128	Receive Error	RX_ER	I with pull-down	Input. Indicates a code error detected by PHY. Used by the LAN91C113 to discard the packet being received. The error indication reported for this event is the same as a bad CRC (Receive Status Word bit 13).
2	4	nChip Select Output	nCSOUT	O4	Output. Chip Select provided for mapping of PHY functions into LAN91C113 decoded space. Active on accesses to LAN91C113's eight lower addresses when the BANK SELECTED is 7.
12	14	External Resistor	RBIAS	NA	Transmit Current Set. An external resistor connected between this pin and GND will set the output current for the TP transmit outputs.
14	16	-	TPO+	O/I	Twisted Pair Transmit Output, Positive.
15	17	-	TPO-	O/I	Twisted Pair Transmit Output, Negative.
17	19	-	TPI+	I/O	Twisted Pair Receive Input, Positive.
18	20	-	TPI-	I/O	Twisted Pair Receive Input, Negative.
22	24	-	nLEDA	OD24	PHY LED Output
23	25	-	nLEDB	OD24	PHY LED Output
34,48-51,53-56,58-61,63-66	36,50-53,55-58,60-63,65-68	-	NC	-	No Connection

2.5. IC600 (14D0830) Hardware description

This specfication describes a multifunction analog ASIC to be used in inkjet printer applications. This ASIC integrates two Switching Voltage Regulator circuits, two motor drive circuits and a Reset circuit in a single IC.

2.5.1 Switching voltage regulators

The ASIC is to support two, buck type, switching, voltage regulators. Each is of the comparitor type, without linear error amplifiers or external compensation networks. For each regulator, the ASIC is to contain: a comparitor with internal reference, internal oscillator, output pass switch, internal current sense and current limit. An external flyback diode, inductor, and filter capacitor is to be used. Output voltage is to be set with an external voltage divider network. VPH_Reg is to be disabled through serial command. VPH_Reg may also be disabled by means of an inhibit pin. Vcc_Reg is to function at all times. Each regulator has a 1ma minimum load.

The regulators are to be designed to support the voltages and currents listed below using the internal pass switch and sense resistor. VPH_Reg will also have the capability to support higher currents than the internal switch supports, through the addition of an external MTD3055V MOSFET and current sense resistor. A pin will be brought out from the gate drive of the internal switch to drive the gate of the external MOSFET. The external sense resistor will be wired as suggested by the ASIC vender.

Intended voltages and loads:

VPH_Reg: 3A DC Load (Peak/Ave)

+/- 2% Reg reference tolerance

Can be disabled through serial command or inhibit pin.

Output voltage can be set from VREF to 13V using the external resistor divider network.

Vcc_Reg: 1000ma DC Load (Not used)

(+/- 2%) Reg.

Output voltage is intended to supply machine Vcc at 5 or 3.3V. Voltage is set with an external voltage divider.

2.5.2 Load detect

For VPH_REG, the DC current from the regulator shall be indicated through an output pin.

2.5.3 2ea. DC motor drivers

Bi-directional, pulse width modulated each with an external PWM input. These motor drives must be able to support a minimum output of 1.6A for 100ms. For thermal budgeting, the maximum average current will be 450mA 'long term average' with an average of 750mA over periods of up to 1 sec. At the current limit (1.6A or greater), the motor drive should 'chop' at the limited current level. The DC motor direction is serially controlled.

2.5.4 1ea. Configurable motor driver

This motor drive is selectable to be operated in one of two modes, DC or stepper. In DC motor mode, the drive is to operate in the same manner as the DC motor drivers previously described. In stepper mode, the drive is to drive a bipolar stepper motor with average current levels of 183, 367, and 550 mA per phase with quarter step mode capability. Phase and current information will be sent over the serial port.

This machine uses “Stepper mode” for TX motor driving. And uses “DC motor mode” for Carrier motor & Feed motor driving.

IC600 (14D0830) Pin descriptions (1/2)

PIN NO.	PIN NAME	PIN DESCRPTION
1	DC1_A or DC1+	Pos output for DC mtr drvr #1
2	GND	Ground
3	DC1B or DC1-	Neg output for DC Mtr drvr #1
4	DC2B or DC2-	Neg output for DC Mtr drvr #2
5	GND	Ground
6	DC2_A or DC2+	Pos output for DC mtr drvr #2
7	VBULK	20 to 33V Input
8	MD2_PWM	Pwm pin for DC mtr drvr #2
9	GND	Ground
10	NVPH_Inhibit	Inhibit pin for VPH reg, active low
11	nRESET	nRESET input/output pin
12	SDATA	Serial data input
13	SCLK	Serial data input clock
14	nCS	Serial input register chip select
15	OASUPPLY	Opamp supply voltage
16	OA1OUT	Output for OpAmp #1
17	OA1+ or oa1plus	Noninverting input for opamp #1
18	OA1- or oa1minus	Inverting input for opamp #1
19	OA2OUT	Output for OpAmp #2
20	OA2+ or oa2plus	Noninverting input for opamp #2
21	OA2- or oa2minus	Inverting input for opamp #2
22	OA3OUT	Output for OpAmp #3
23	OA3+ or oa3plus	Noninverting input for opamp #3
24	OA3- or oa3minus	Inverting input for opamp #3
25	OAGND	Opamp ground
26	VBULK	-
27	MD3_OUT_A_A or cm1A or MD3_OUT_A+	Phase A+ output for motor driver #3
28	MD3_R_SENSE_A or rsense1	Phase A sense pin. Ground solidly to ASIC ground, if MD3 used in DC mtr config.
29	MD3_OUT_A_B or cm1B or MD3_OUT_A-	Phase A- output for motor driver #3
30	MD3_OUT_B_B or cm2B or MD3_OUT_B-	Phase B- output for motor driver #3
31	MD3_R_SENSE_B or rsense2	Phase B sense pin. Ground solidly to ASIC ground, if MD3 used in DC mtr config.
32	MD3_OUT_B_A or cm2A or MD3_OUT_B+	Phase B+ output for motor driver #3
33	VBULK	-
34	MD3_MODE or mode	Mode pin input for mtr drvr #3
35	MD3_PWM	Pwm pin for DC mtr drvr #3
36	SWITCH_OUT	Source pin for printhead Vcc switch
37	SWITCH_IN	Drain pint for printhead Vcc switch. Also serves as the power supply for the Vcc Base Drive circuit.
38	BASE_DR_FB or v1p8fb	feedback pin for NPN base drive. Tie high if not used.
39	BASE_DR_OUT or v1p8base	Output drive pin for NPN base drive
40	CPL	Charge pump pin
41	CPH	Charge pump pin
42	VP	Charge pump storage cap pin
43	GND	-
44	VCC_FB	Feedback pin for Vcc Reg. Tie high if not used.

IC600 (14D0830) Pin descriptions (2/2)

PIN NO.	PIN NAME	PIN DESCRPTION
45	VBULK	Source pin for Vcc Reg. Place a 0.1uF decoupling cap close to this pin.
46	VCC_SOURCE or vccs	Source pin for Vcc reg. Flyback diode should be placed close to this pin.
47	VBULK	Source pin for VPH regulator. Place 0.1uF decoupling cap close to this pin.
48	VBULK	Source pin for VPH regulator. Place 0.1uF decoupling cap close to this pin.
49	R_SENSE_VPH or vphdsense	Pin connect for ext sense resister, if used.
50	VPH_SOURCE or vphs	Source pin for VPH regulator. Flyback diode should be placed close to this pin.
51	VBULK	Source pin for VPH regulator. Flyback diode should be placed close to this pin.
52	VPH_GATE or vphg	Ext gate drive output. N/C if not used.

PIN NO.	PIN NAME	PIN DESCRPTION
53	VPHSCLAMP	VPH reg source clamp
54	VPH_LD_DET or vphload	Load detect output pin
55	VPH_FB or vphfb	Feedback pin for the VPH reg
56	LED1	Open collector output
57	LED2	Open collector output
58	LED3	Open collector output
59	TRML_SNS or thermwarn	Thermal warning open collector output
60	DO1	Open collector output
61	DO2	Open collector output
62	DO3	Open collector output
63	MD1_PWM or dc1pwm	Pwm pin input for mtr drvr #1
64	VBULK	-
65	Thermal Pad, GND	Should be closely grounded with other ASIC grounds.

2.6. Panel control block

The following controls are performed by the CX93310.

- Operation panel key scanning
- Operation panel LCD display
- Sense the Original sensor, Front sensor and Door sensor.

2.7. Mechanism/recording control block

- Recording control block diagram

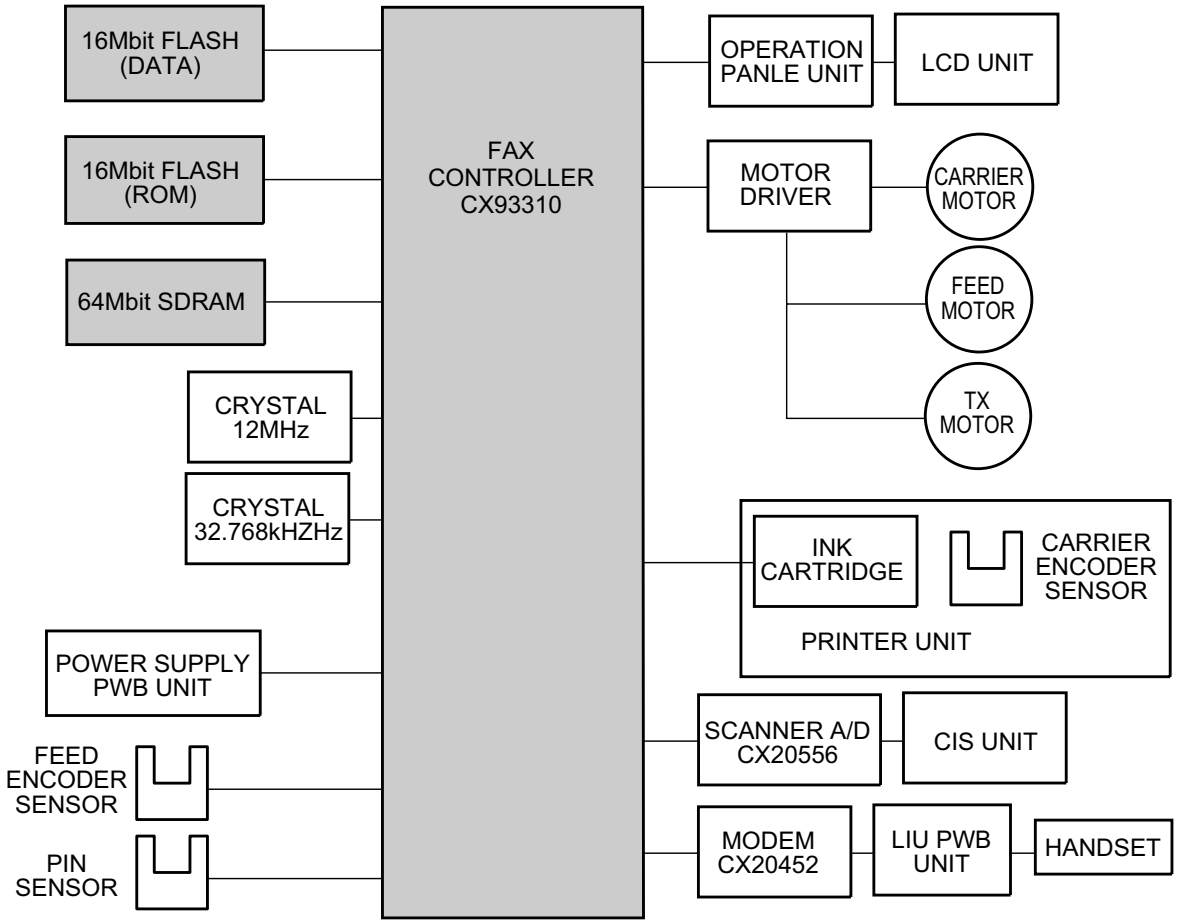

Fig. 4

[3] Circuit description of LIU PWB

1. LIU block operational description

1.1. Block diagram

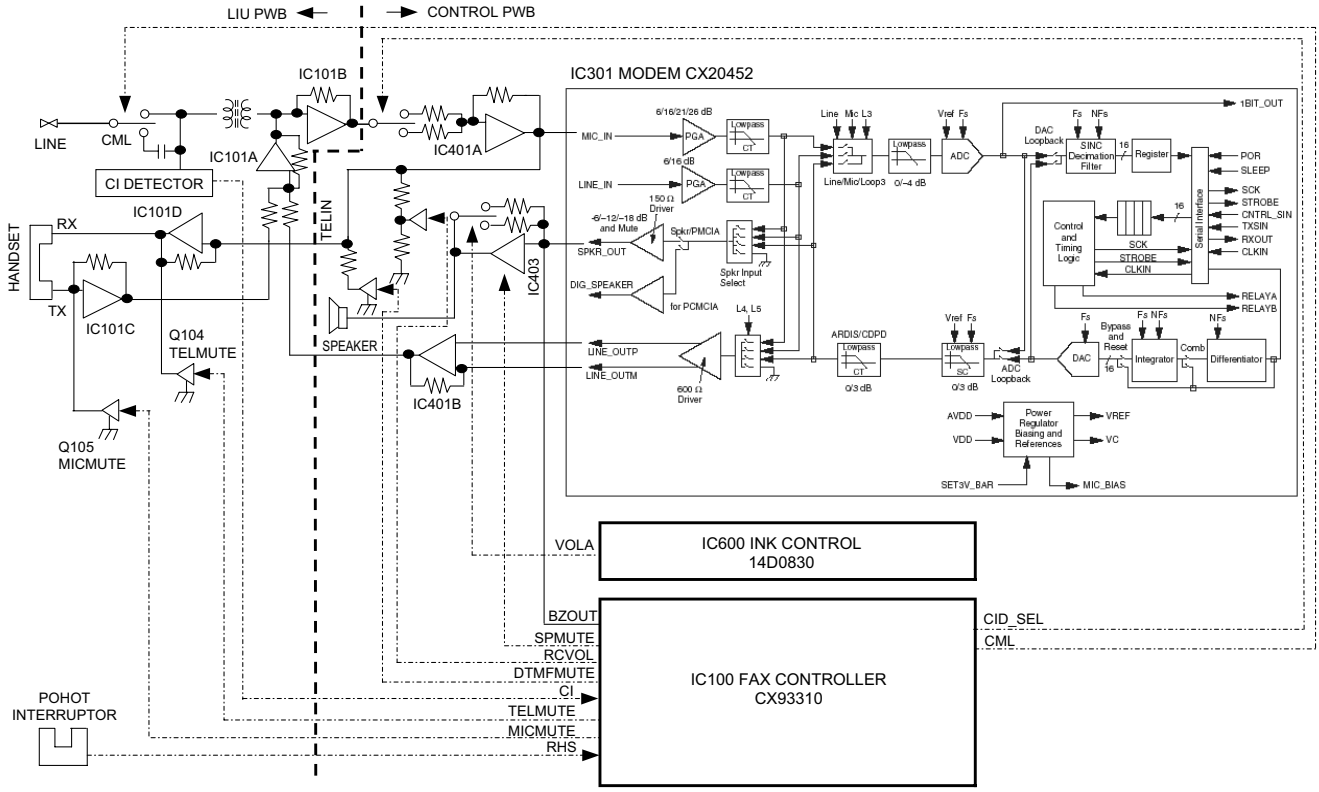

Fig. 5

1.2. Circuit description

The LIU PWB is composed of the following 7 blocks.

1. Speech circuit section
2. Dial transmission section
3. Speaker amplifier section
4. Ringer circuit section
5. CI detection circuit
6. Signal/DTMF transmission level & receiving level
7. Power supply and bias circuit

1.3. Block description

1. Speech circuit section

- The receiver volume is an electronic volume type, this model is switched in 3 steps.

2. Dial transmission section

- D.P. transmission: The CML relay is turned on and off for control in the DP calling system. (Refer to the attached sheet.)
- DTMF transmission: It is formed in the modem, and is output.

3. Speaker amplifier section

- Ringer volume: It is controlled by the combination of the attenuator value of the SPEAKER DRIVER in the modem and the ringer sending level sent from the modem.
- Speaker volume: It is controlled by the attenuator value of the SPEAKER DRIVER in the modem.

4. Ringer circuit section

- The ringer sound is formed in the tone of modem when CI signal is detected. The amplifier circuit drives the speaker of the main body.

5. CI detection circuit

- CI is detected by the photo coupler which is integrated in series in the primary side TEL circuit well proven in the existing unit.

6. Signal/DTMF transmission level & receiving level

- Signal transmission level setting: According to soft switch list.
- DTMF transmission level setting: According to soft switch list

7. Power supply and bias circuit

- The voltage of +24 V are supplied from the control PWB unit.

1.4. Signal selection

The following signals are used to control the transmission line of TEL/FAX signal. For details, refer to the signal selector matrix table.

[Control signals from output port]

Signal Name	Description
CML	Line connecting relay and DP generating relay H: Line make L: Line break
SP MUTE	Speaker tone mute control signal H: Muting (Power down mode) L: Muting cancel (Normal operation)
TELMUTE	Handset reception mute control signal H: Muting L: Muting cancel

[Signals for status recognition according to input signals]

Signal Name	Function
RHS-	H: The handset is in the on-hook state. L: The handset is in the off-hook state.
CI-	Incoming call (CI) detection signal.

[Other signals]

Signal Name	Function
TEL IN	Receiving signal from line or modem.
SPOUT	Speaker output signal.
TXOUT	Transmission (DTMF) analog signal output from modem.
RXIN	Reception (DTMF, others) analog signal input into modem.

NO	Signal Name (CNLIU)	NO	Signal Name (CNLIU)
1	+24V	9	TXOUT
2	DG	10	CML
3	DG	11	CI-
4	+5V(N.C.)	12	MICMUTE
5	RHS-	13	TELOUT
6	TELIN	14	HS-(N.C.)
7	TELMUTE	15	DPON
8	RXIN		

(Example: SENDING/RECEIVING)

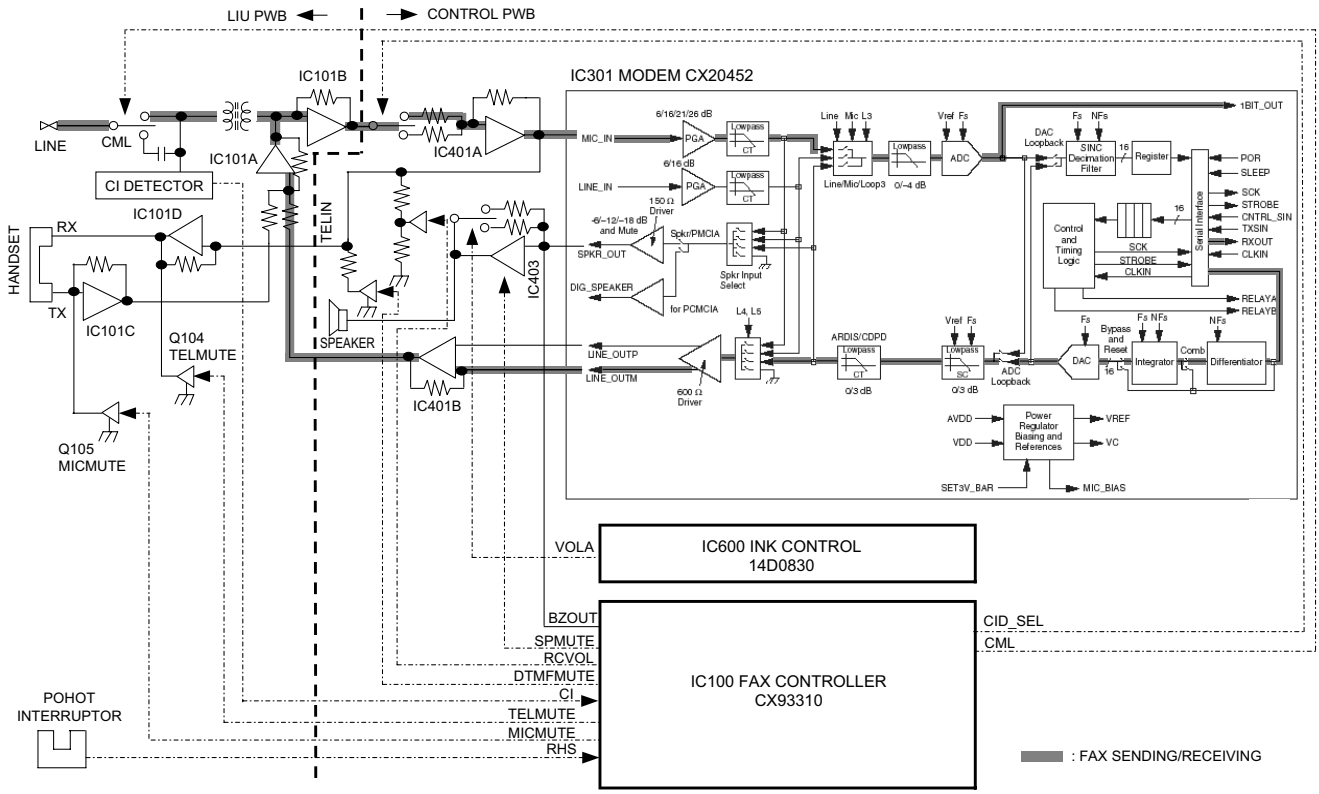

Fig. 6

[4] Circuit description of power supply PWB

1. Block diagram

This power supply unit has the function to convert the AC 220-230 V (50/60 Hz) to DC 5 V, and provide these outputs to the equipment. The following explains the function of each block.

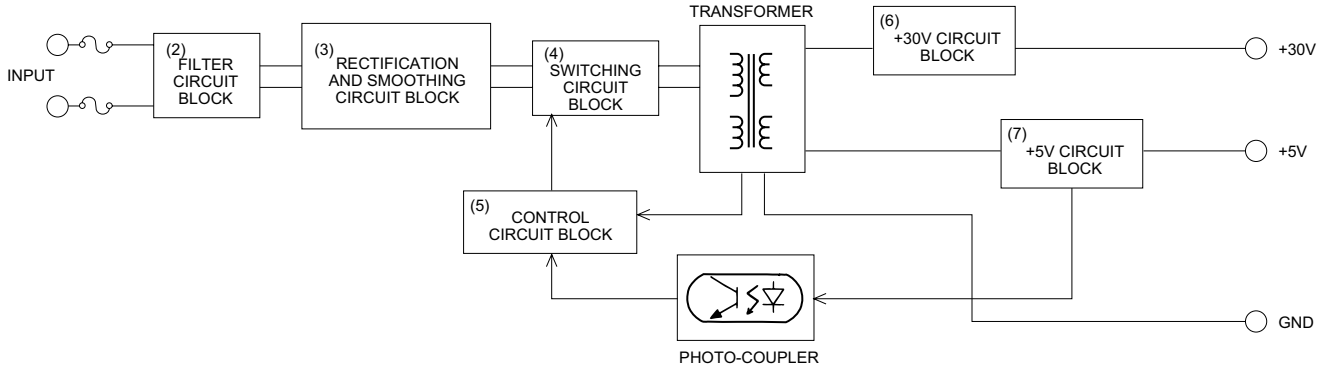

Fig.7

2. Filter circuit block

This circuit reduces the outgoing noise through the input lines which is generated in the power supply unit, and prevents the invasion of the noise from the lines.(the excessive surge such as the thunder is prevented by the varistor(Z1).)

3. Rectification and smoothing circuit block

This circuit rectifies and smoothes the AC input, and provides the DC voltage to the switching circuit block.

4. Switching circuit block

This circuit converts the DC voltage (provided from the Rectification and smoothing circuit block) to the high frequency pulse voltage by FET(Q1)'s switching (on/off repeat), and provides the energy to the transformer(T1). It discharges the energy (charged during the FET ON time) to the secondary side during the FET OFF time through the secondary windings. The output voltage on the secondary side provided by the energy depend on the ratio of the winding turns (primary: secondary) etc.

5. Control circuit block

This circuit block controls the output voltage by transmitting the detected +5 V voltage to the primary control circuit through the photo-coupler(PC1). In case of the over-current, this circuit reduces providing the energy to the transformer. In case of the over-voltage, this circuit reduces providing the energy to the transformer by letting the Power-Zener(D104; connected between the +30 V output voltage and GND) into the short mode and letting the over-current protection circuit work.

6. +30V circuit block

This circuit block rectifies and smoothes the high-frequency pulse voltage provided by the transformer, and provides the DC +30 V output to the equipment.

7. +5V circuit block

This circuit block rectifies and smoothes the high-frequency pulse voltage provided by the transformer, and provides about DC +5 V output to the equipment. The output voltage is adjusted by the variable resistor (VR101).

[5] Circuit description of CIS unit

1. CIS

CIS is an image sensor which puts the original paper in close contact with the full-size sensor for scanning, being a monochromatic type with the pixel number of 1,728 dots and the main scanning density of 8 dots/mm.

It is composed of sensor, rod lens, LED light source, light-conductive plate, control circuit and so on, and the reading line and focus are previously adjusted as the unit.

Due to the full-size sensor, the focus distance is so short that the set is changed from the light weight type to the compact type.

2. Waveforms

The following clock is supplied from CX93310 of the control board, and VO is output.

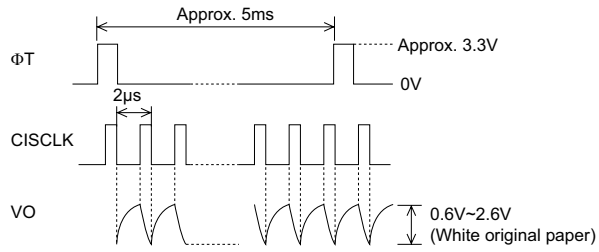

Fig.8

CHAPTER 6. CIRCUIT SCHEMATICS AND PARTS LAYOUT

[1] Control PWB circuit

1. Main Control Block (1a/10)

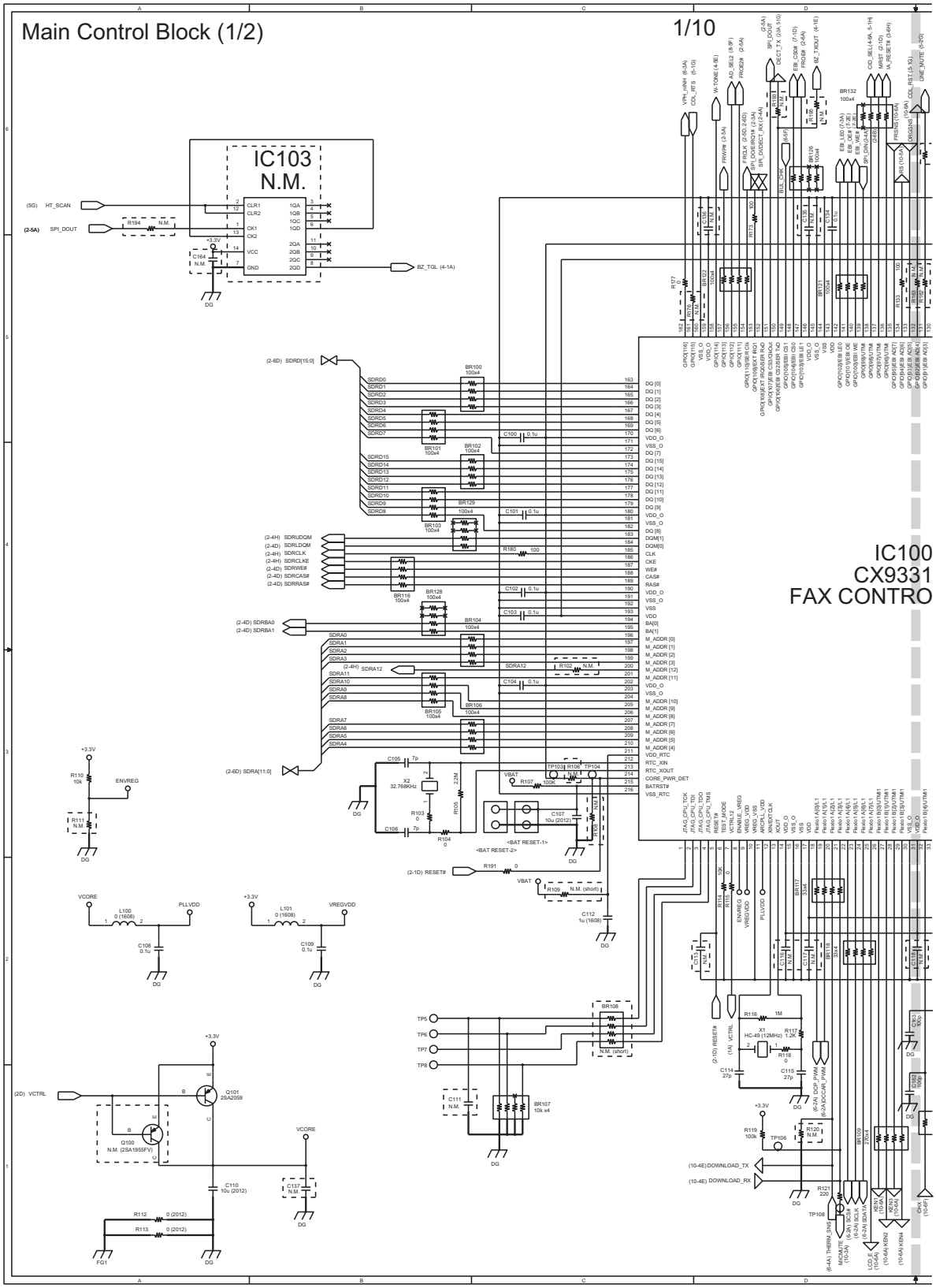

2. Main Control Block (1b/10)

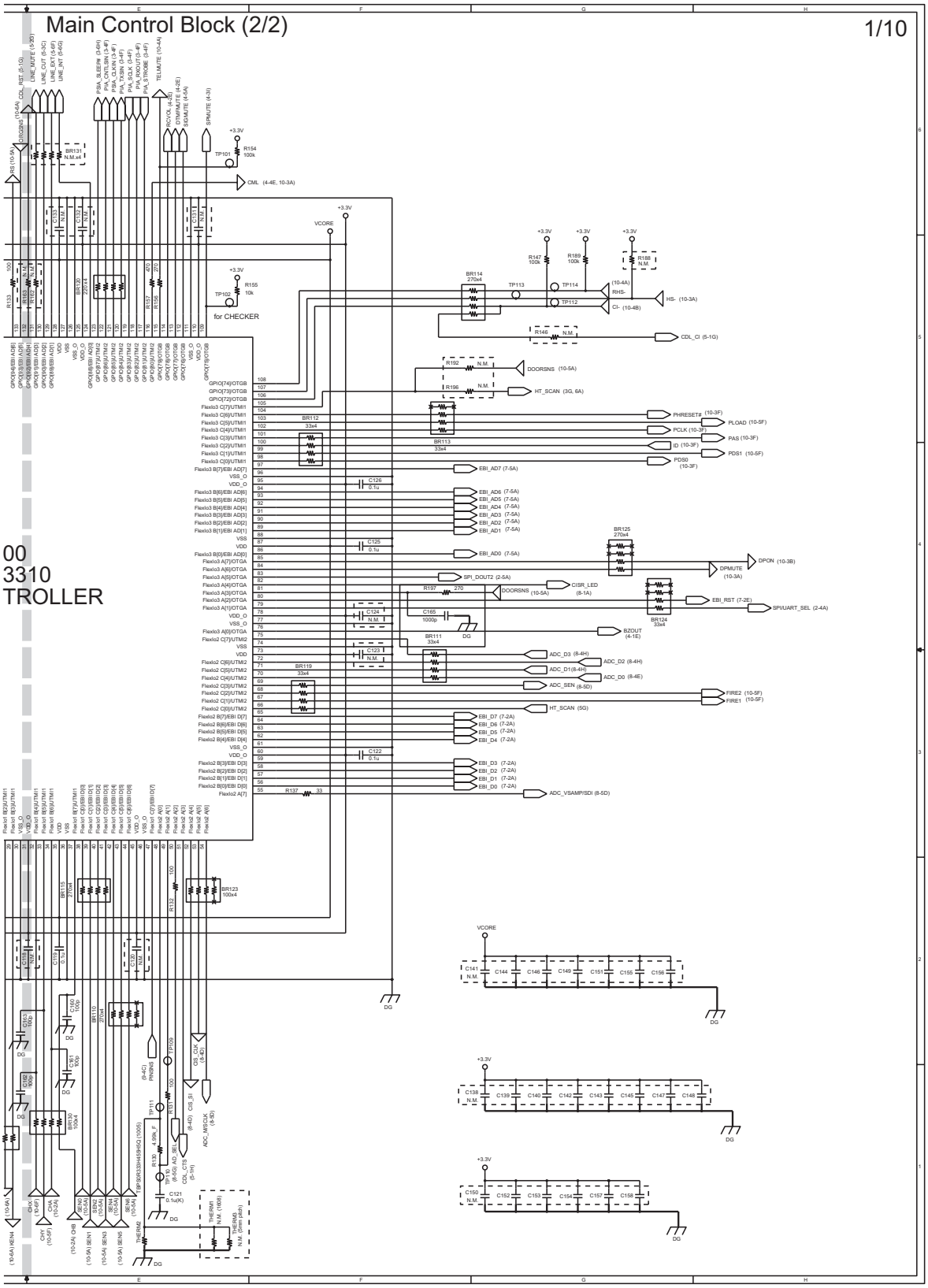

3. Memory Block (2/10)

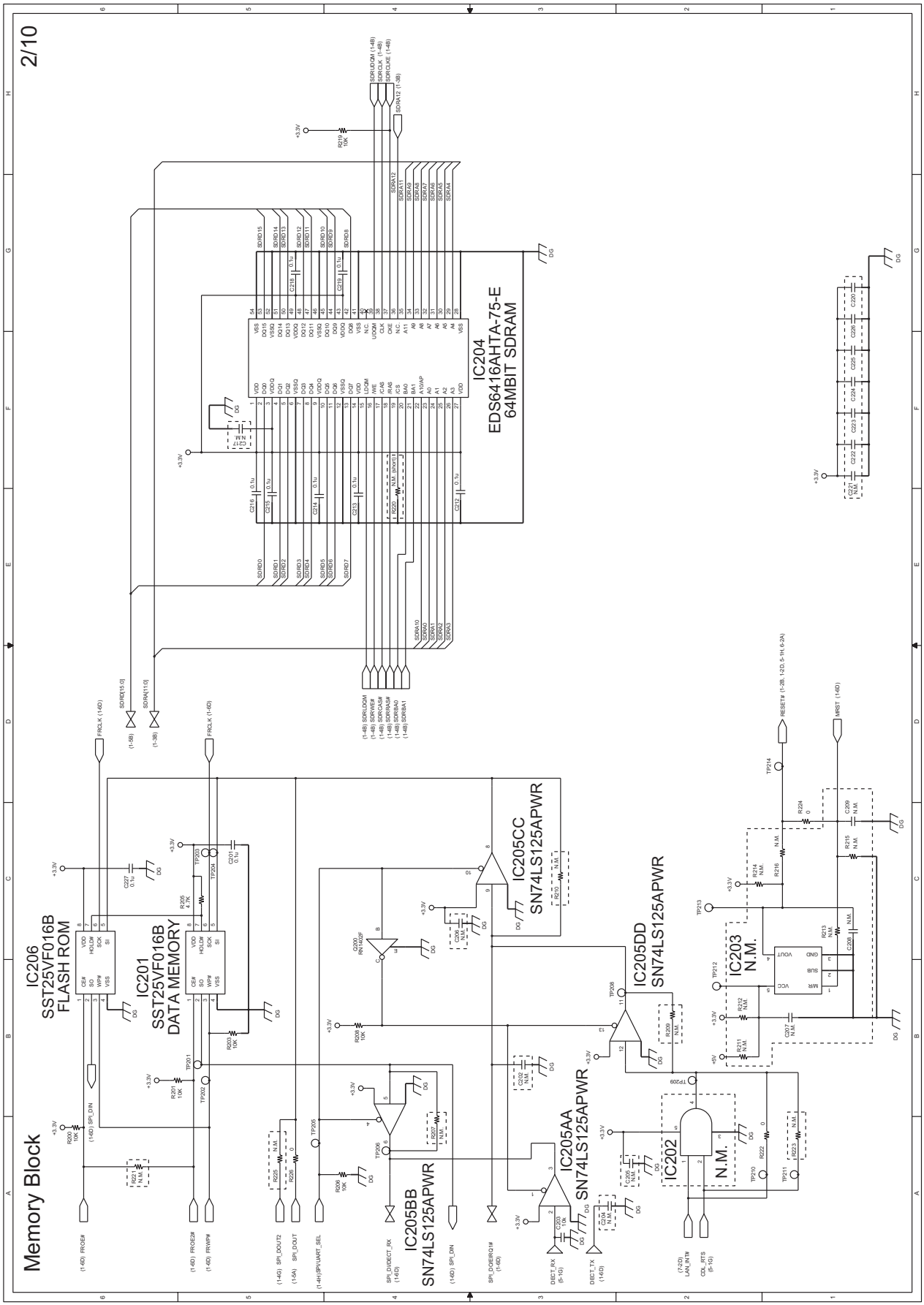

4. Modem Block (3/10)

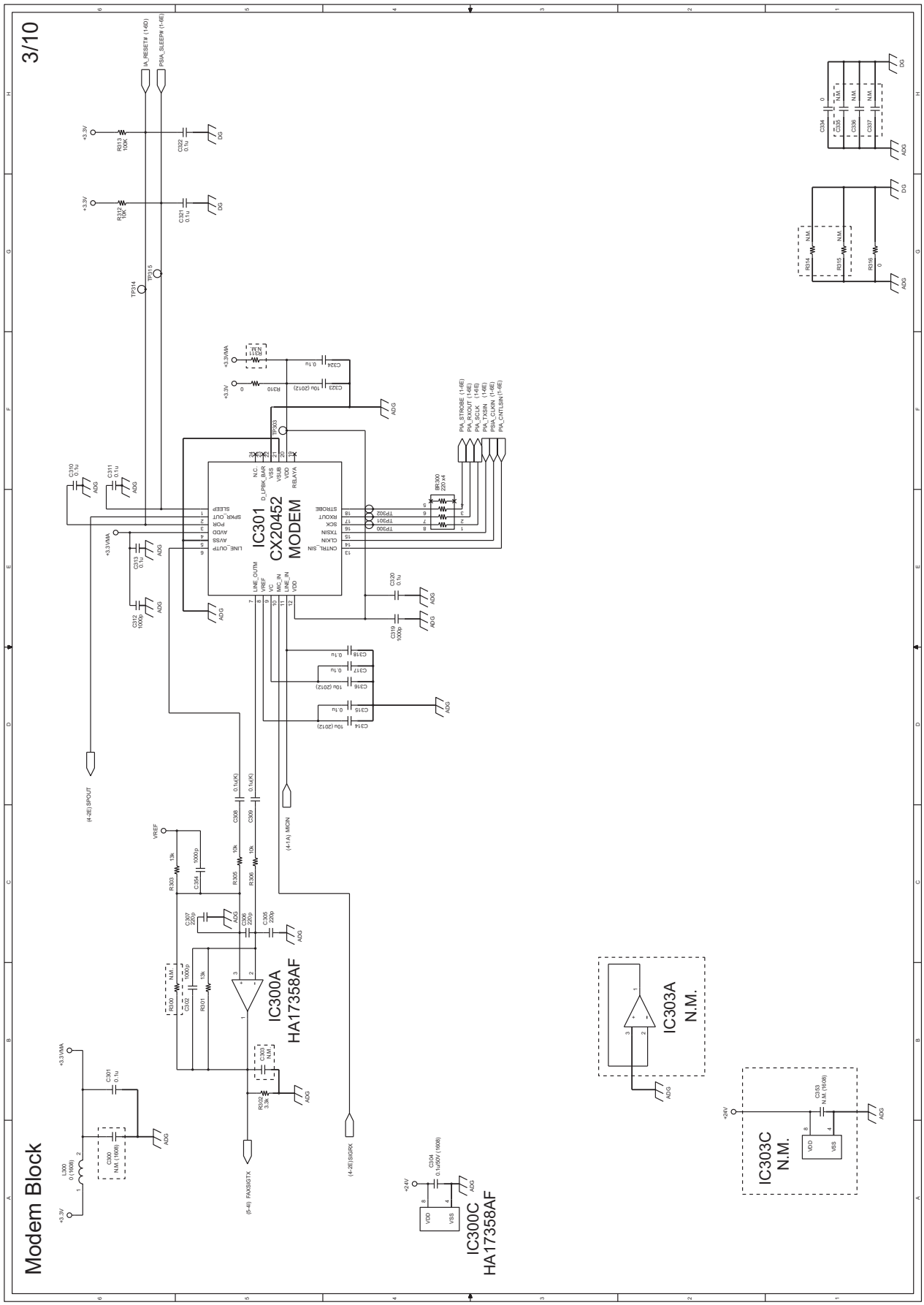

5. Analog Signal Block 1 (4/10)

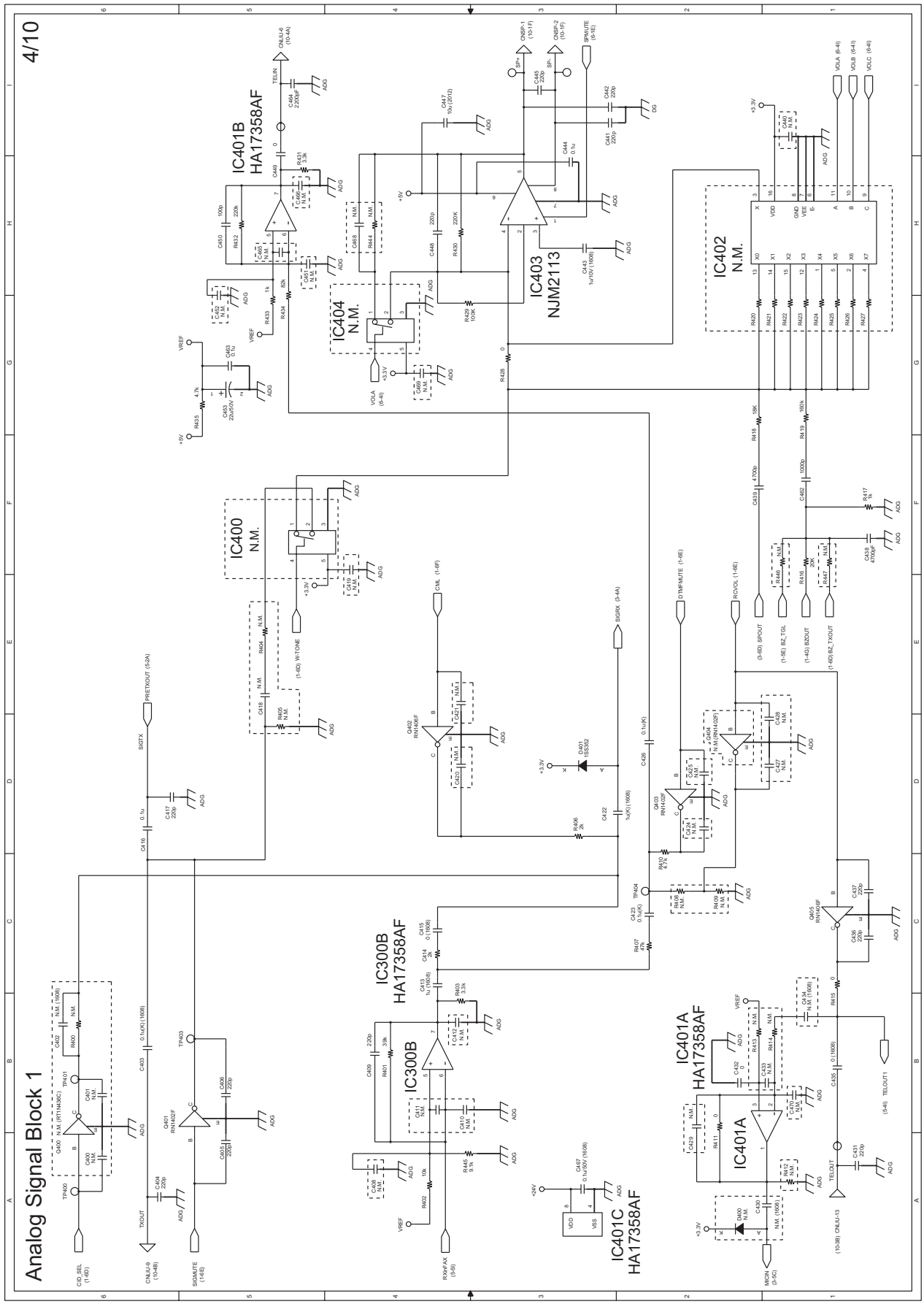

6. Analog Signal Block 2 (5/10)

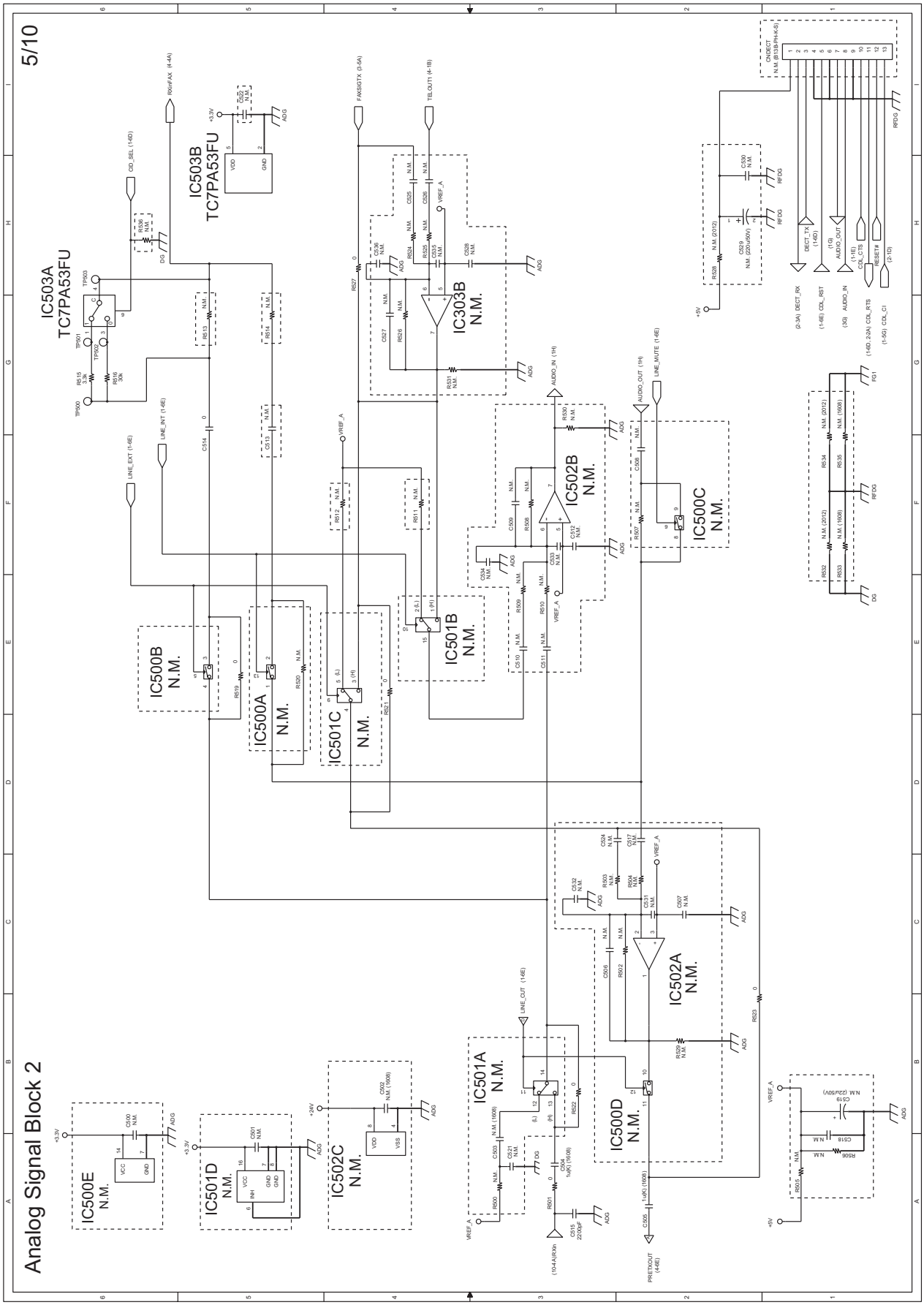

7. Motor Control Block (6/10)

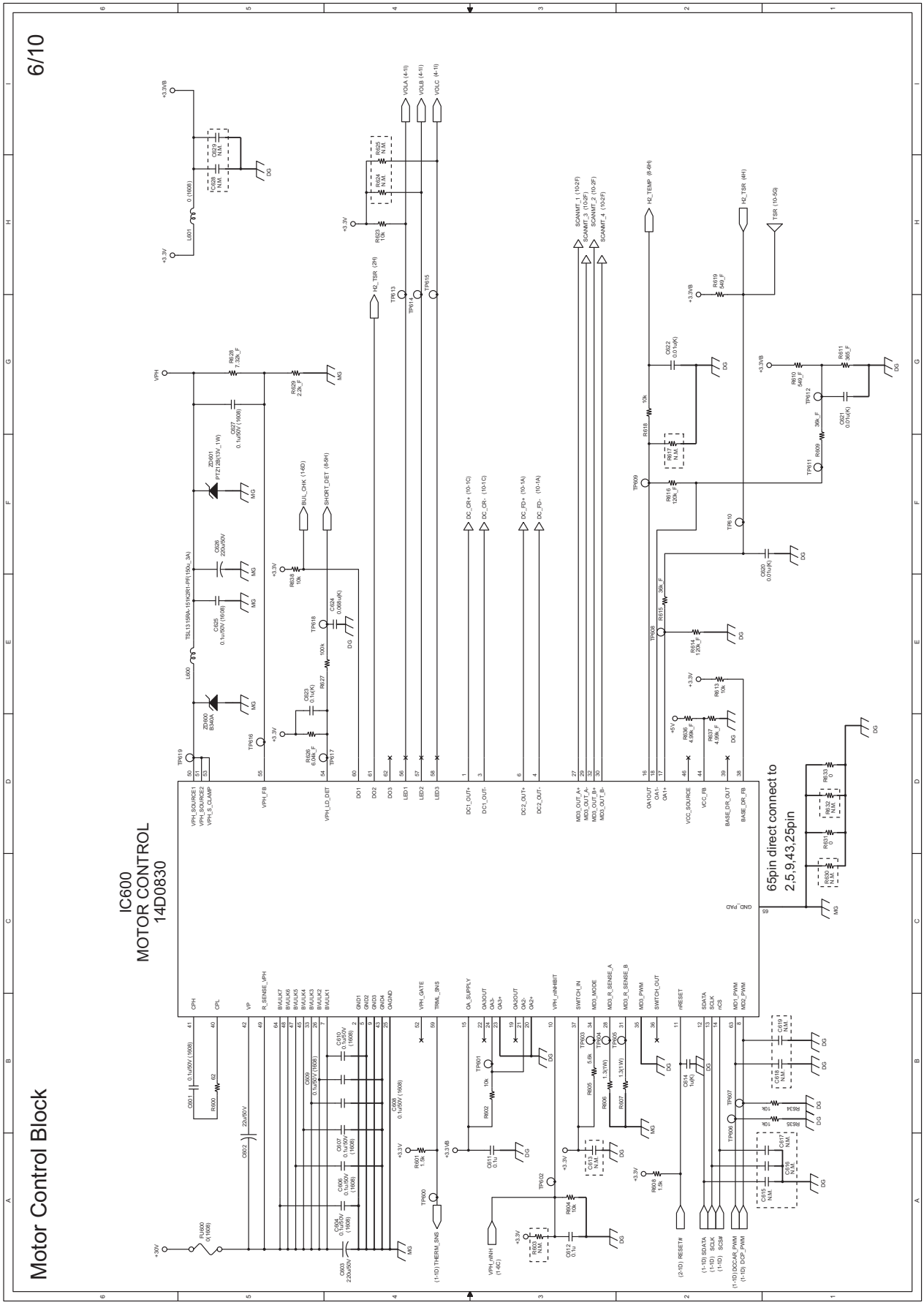

8. LAN Control Block (7/10)

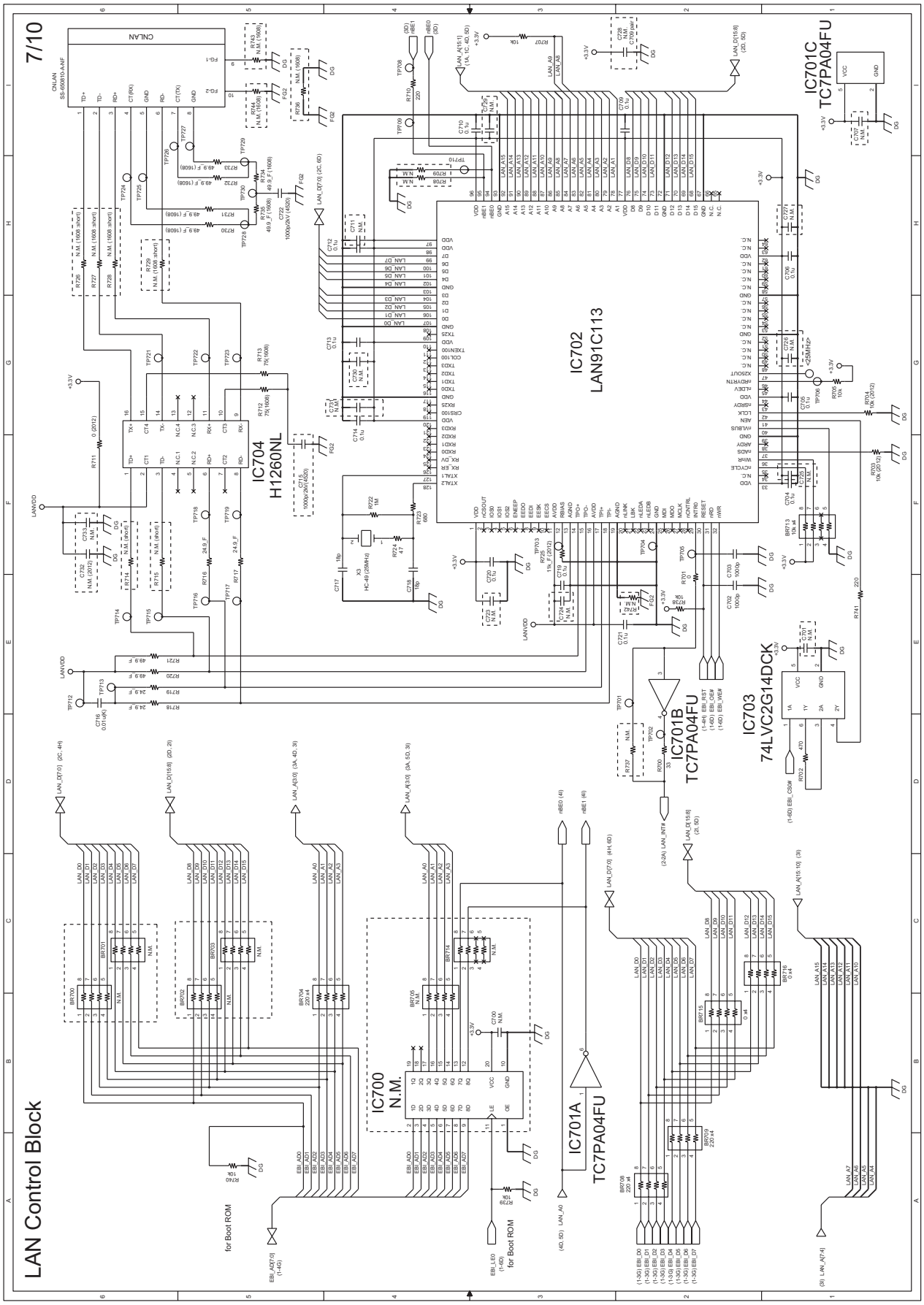

9. Scanner I/F Block (8/10)

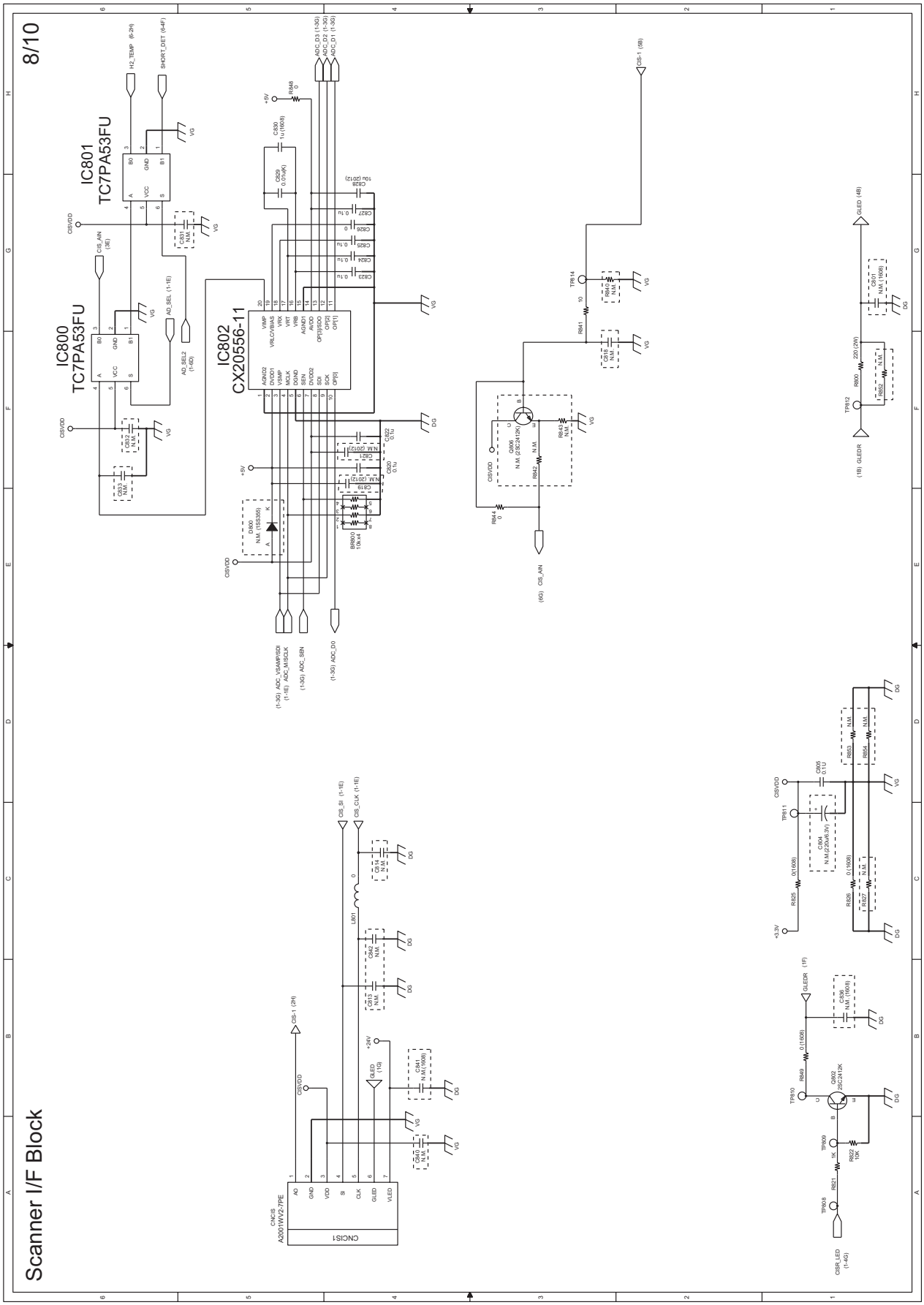

10. Sensor/Power Supply Block (9/10)

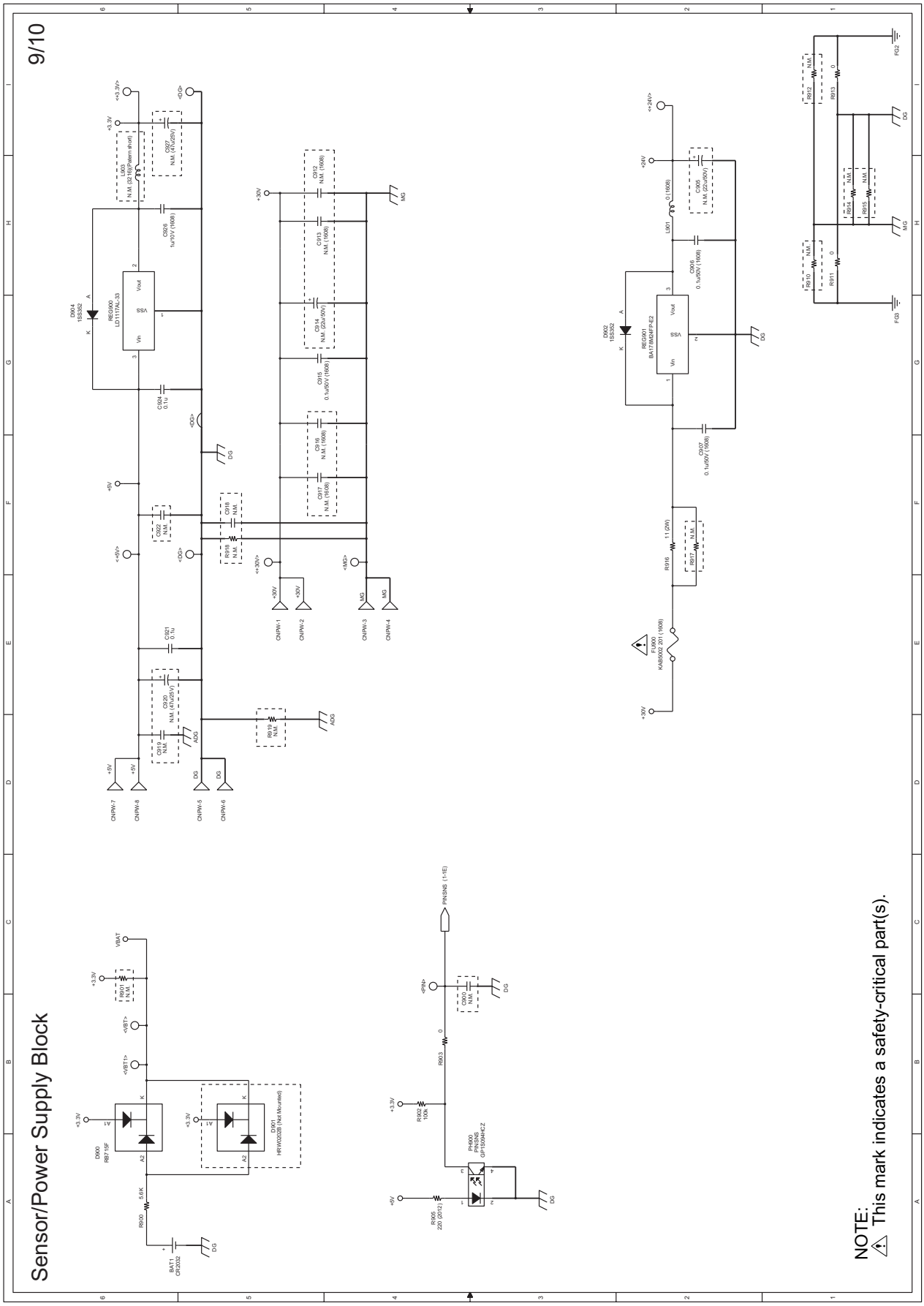

11. Connector Block (10/10)

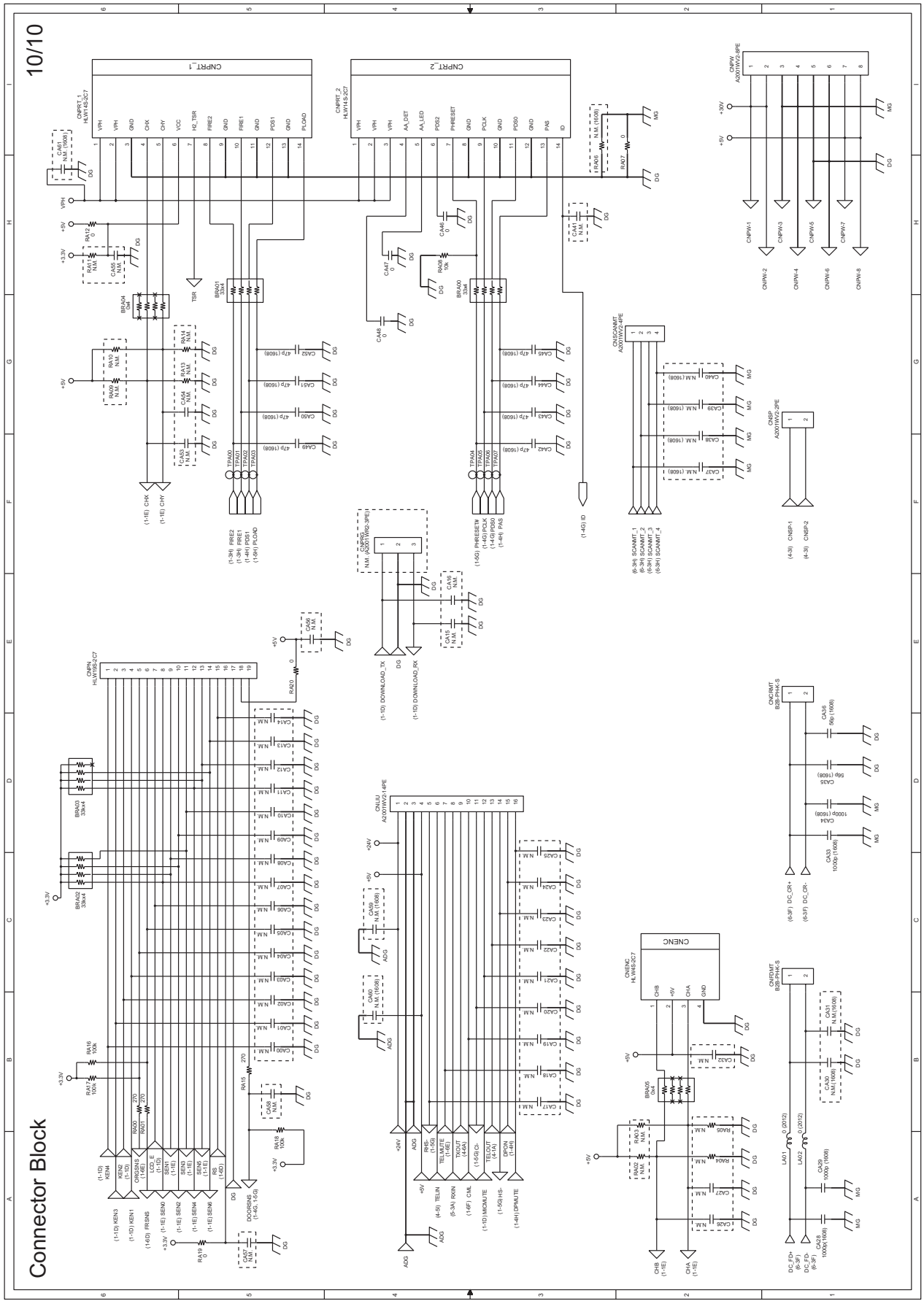

12. Control PWB parts layout (Top side)

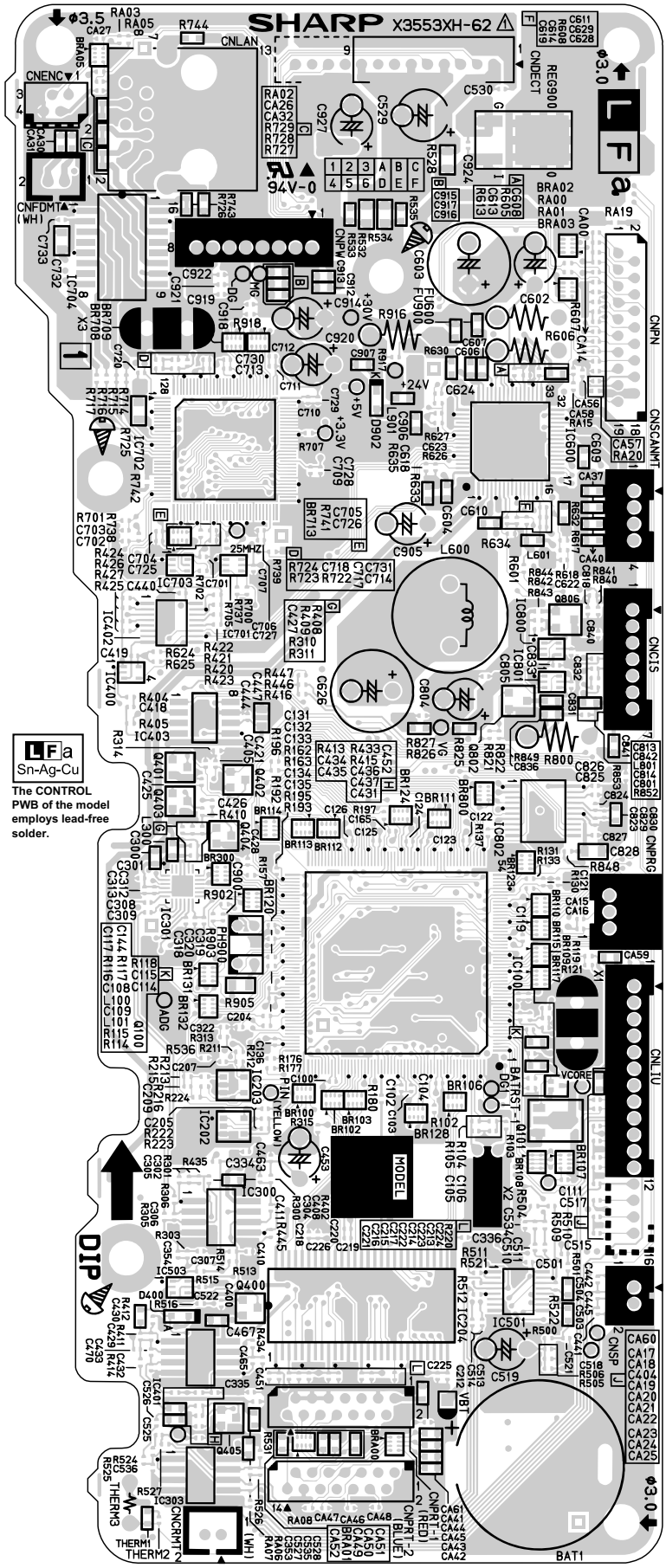

13. Control PWB parts layout (Bottom side)

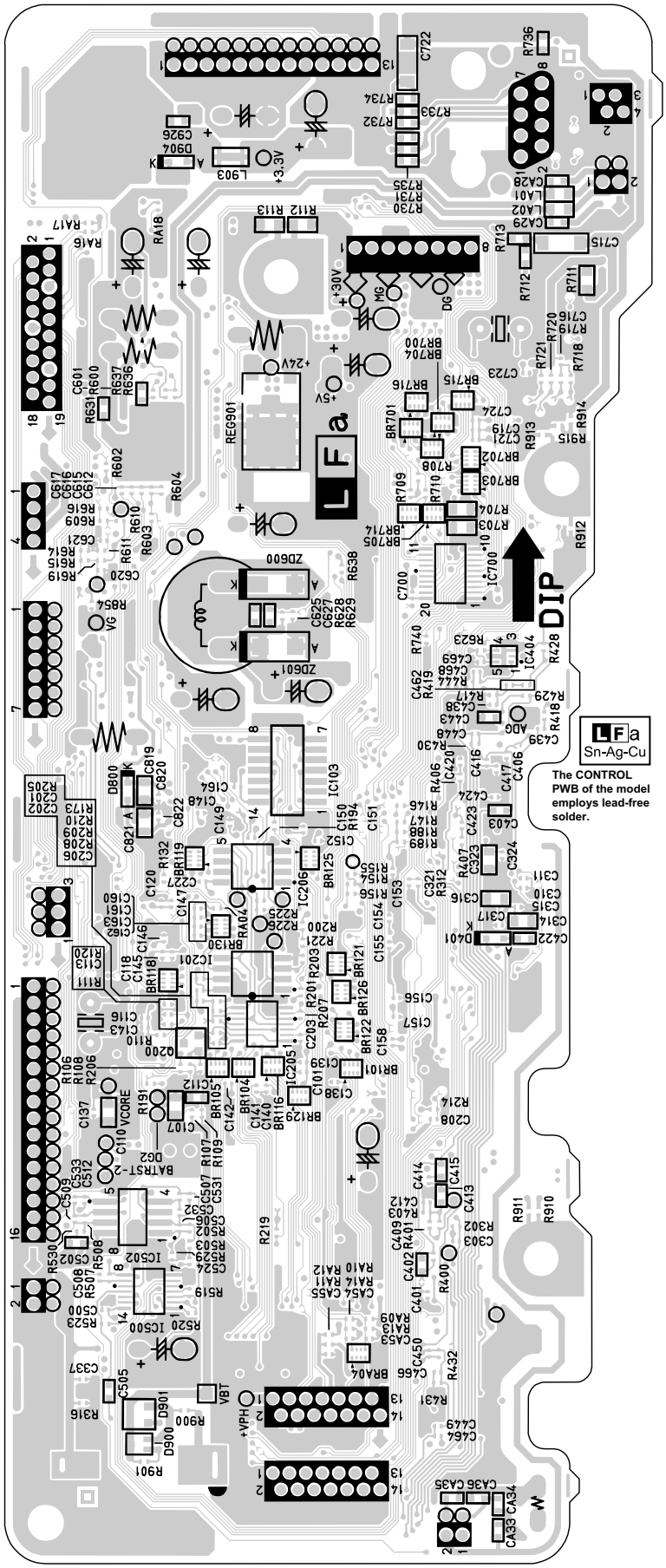

[2] LIU PWB circuit

1. LIU PWB Circuit (1/3)

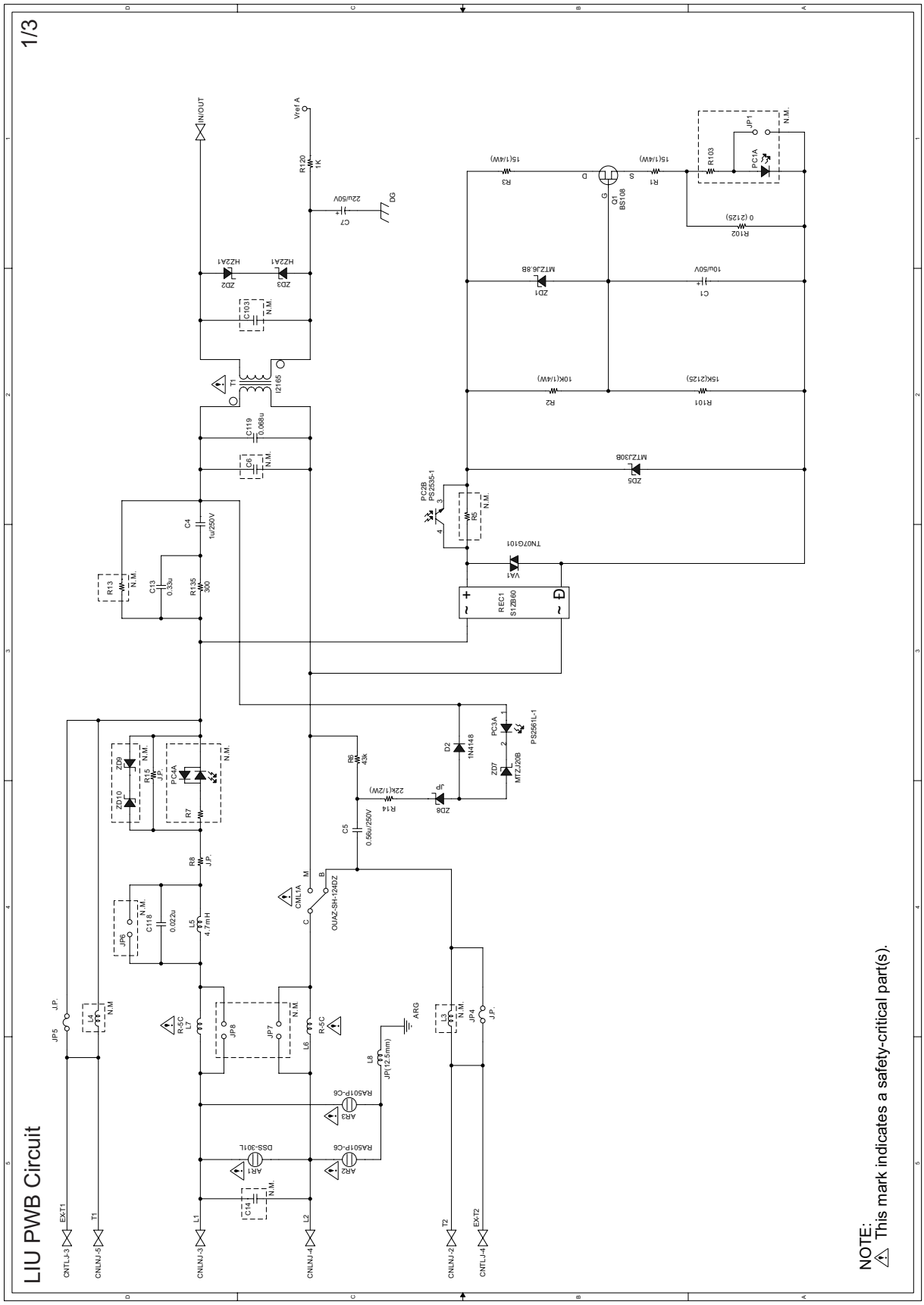

2. LIU PWB Circuit (2/3)

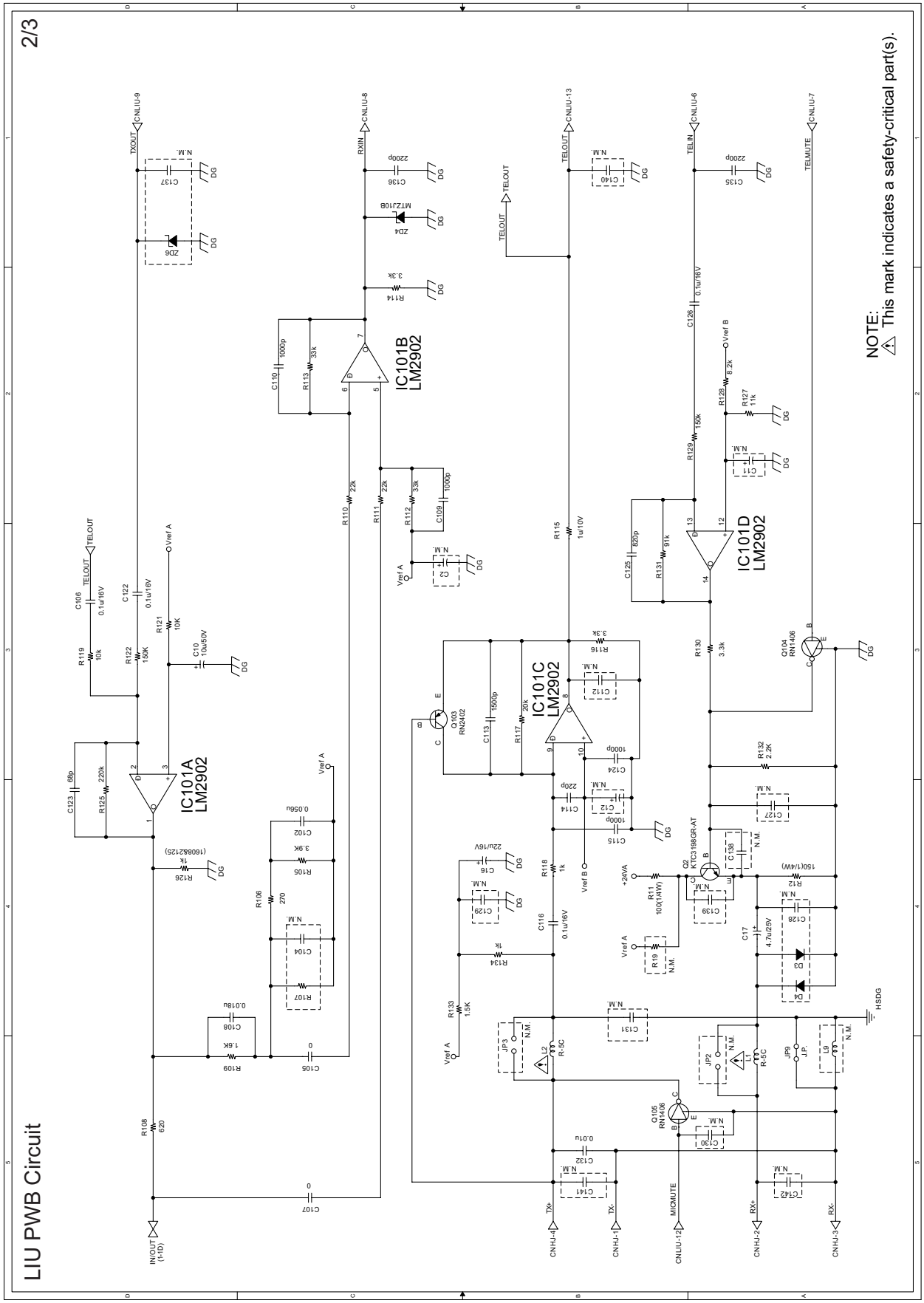

3. LIU PWB Circuit (3/3)

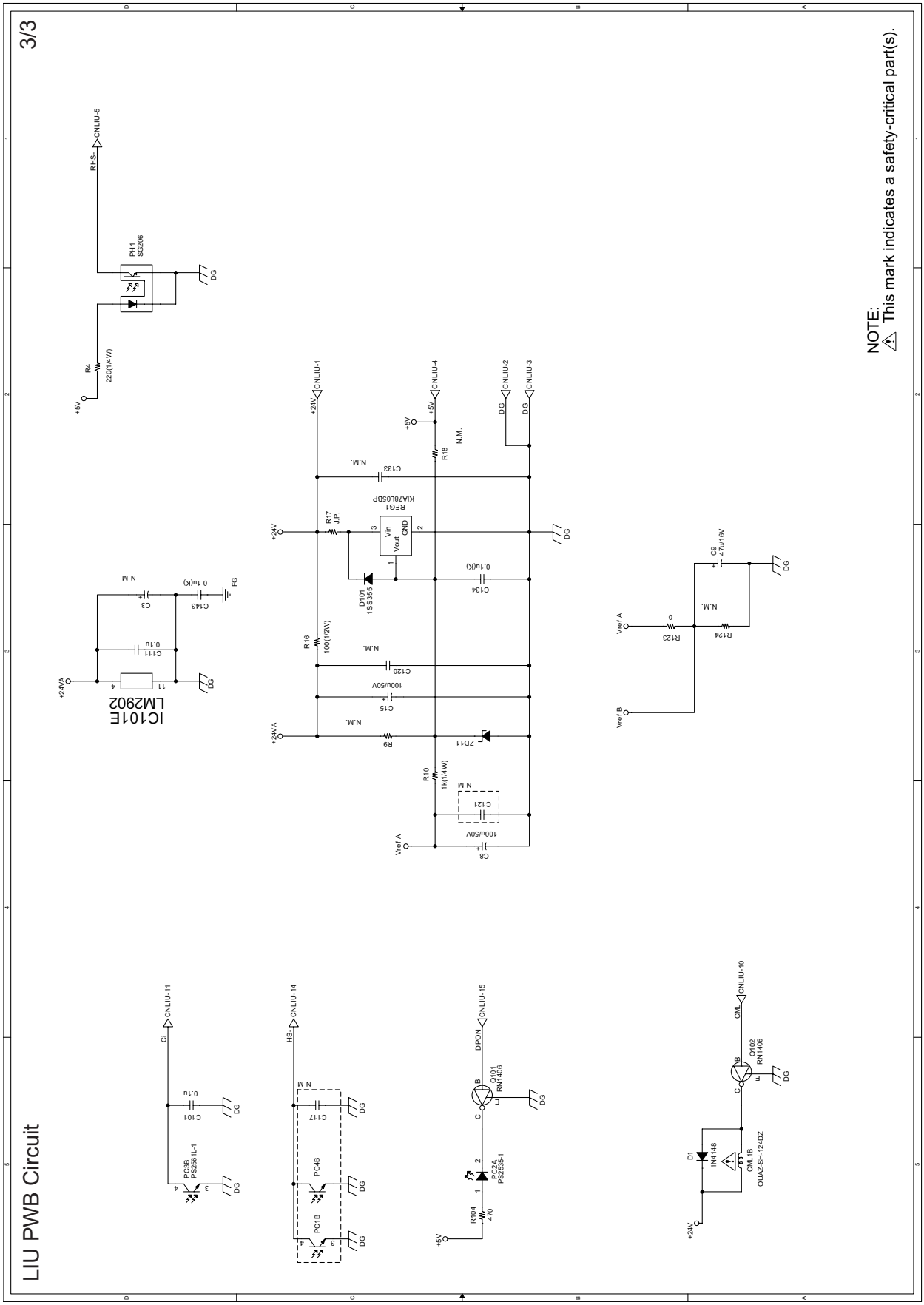

4. LIU PWB parts layout (Top side)

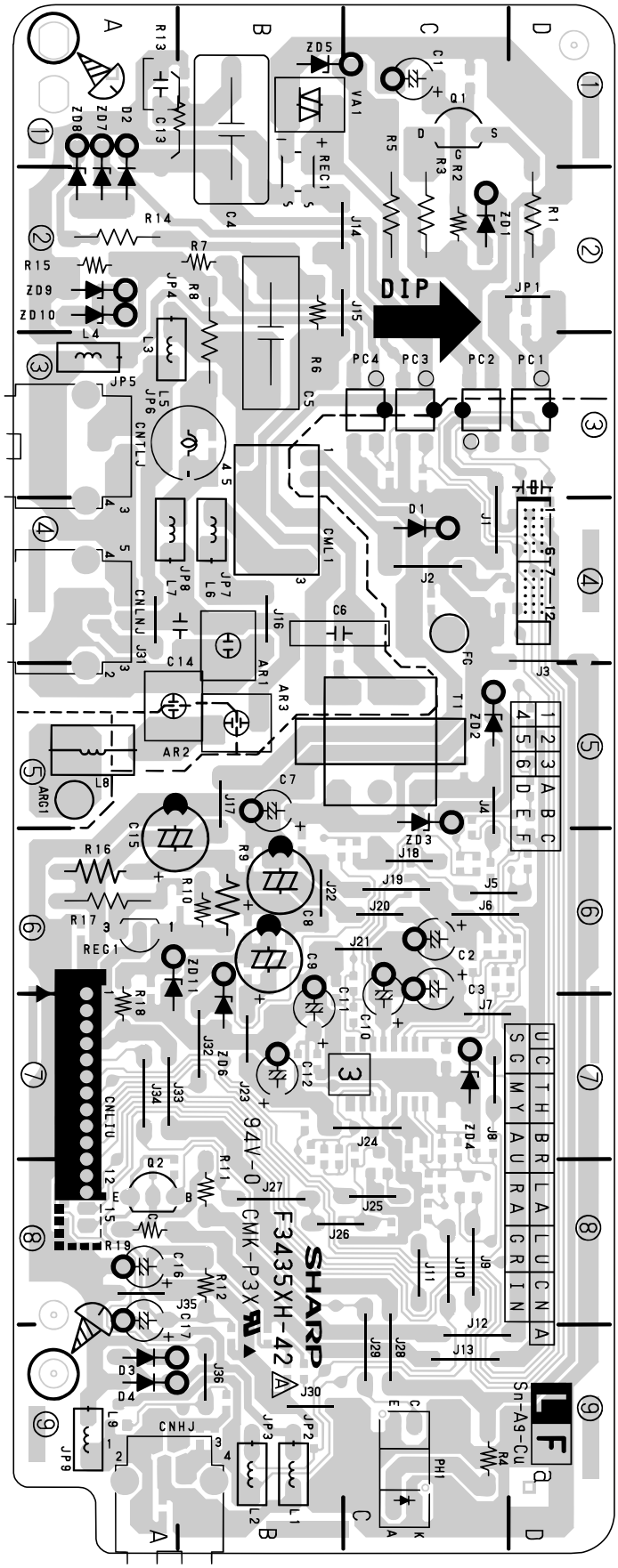

The TEL/LIU PWB of the model employs lead-free solder.

5. LIU PWB parts layout (Bottom side)

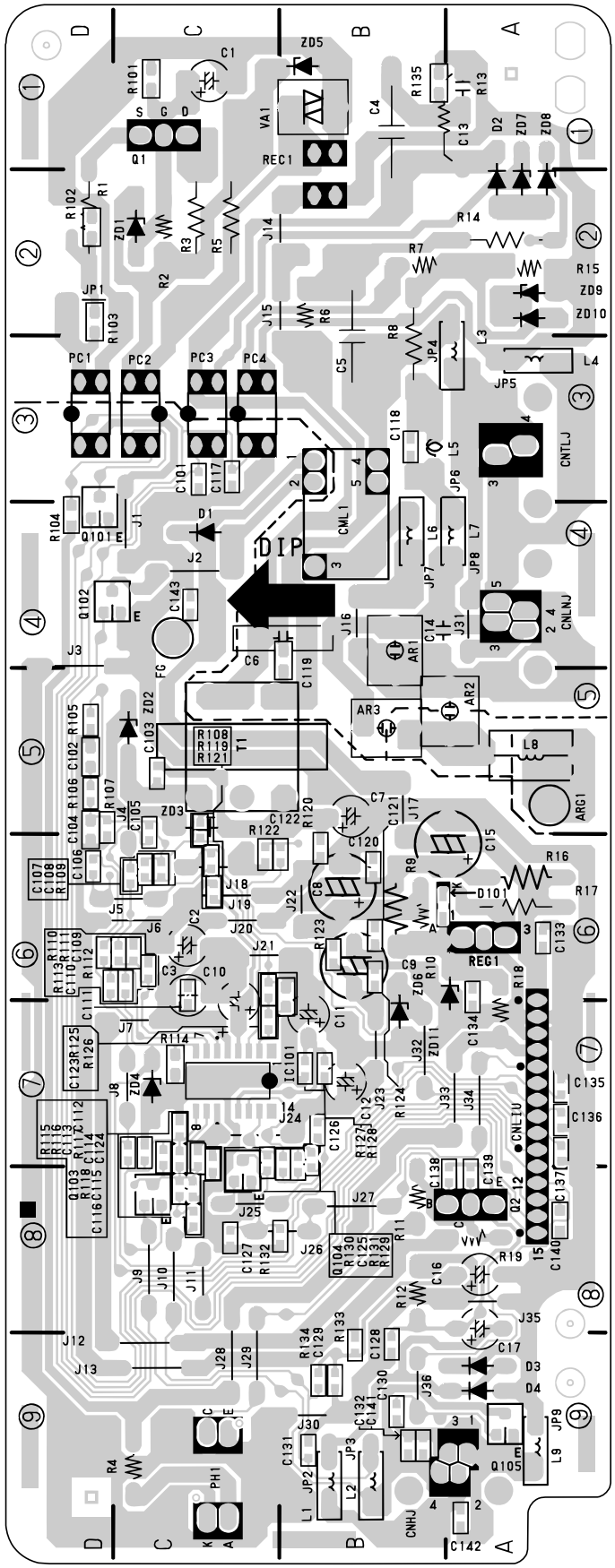

LFa
Sn-Ag-Cu

The TEL/LIU PWB of the model employs lead-free solder.

[3] Power Supply PWB circuit

1. Power Supply PWB circuit

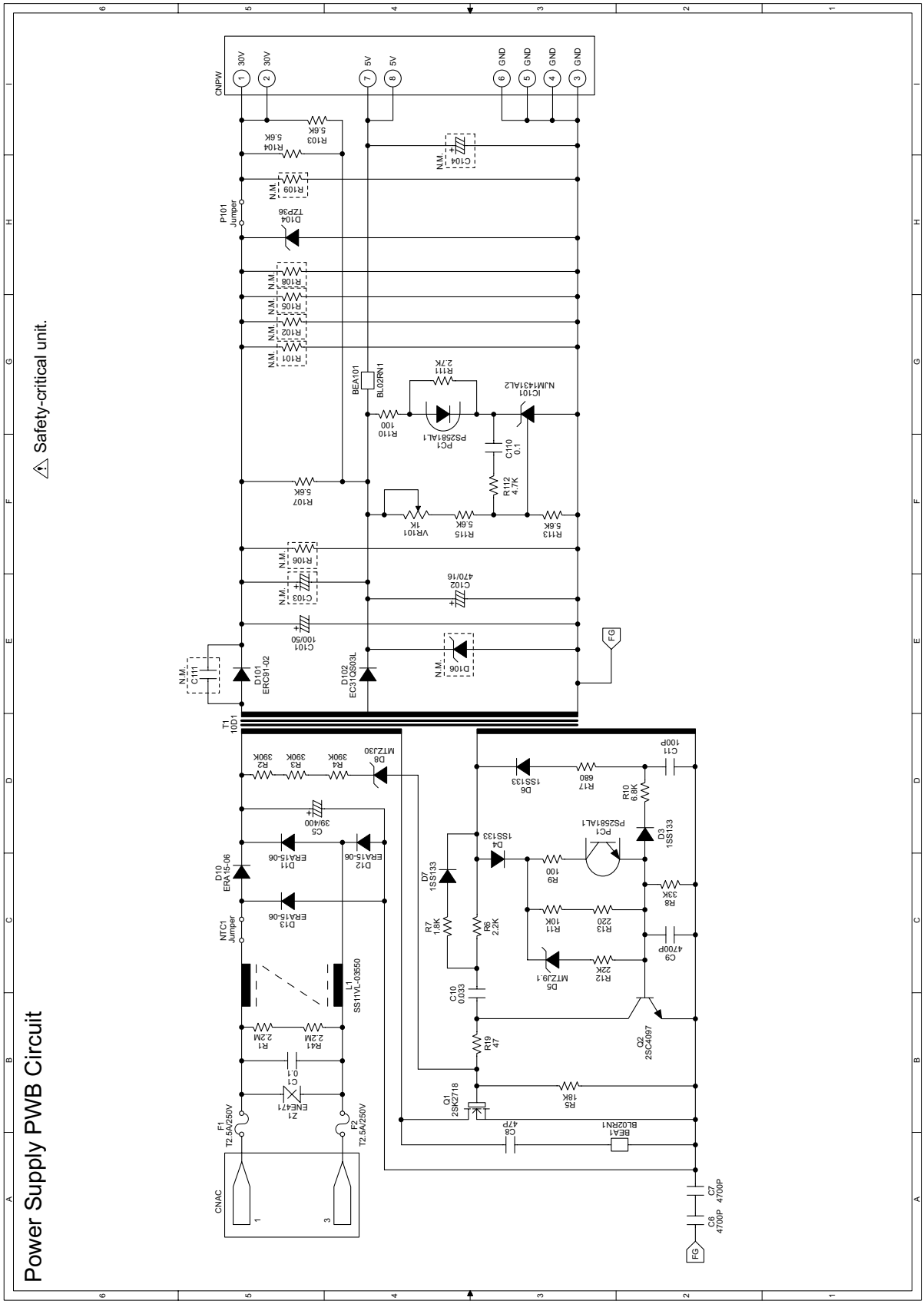

2. Power Supply PWB parts layout (Top side)

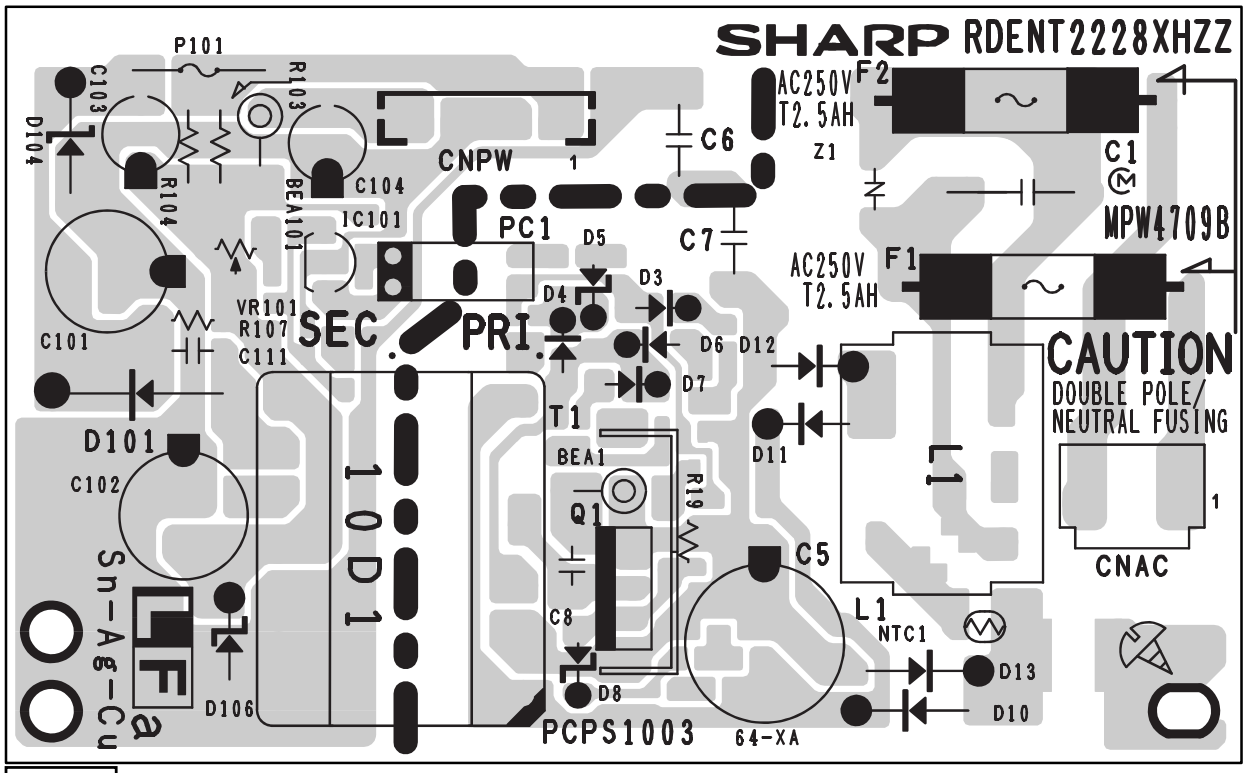

3. Power Supply PWB parts layout (Bottom side)

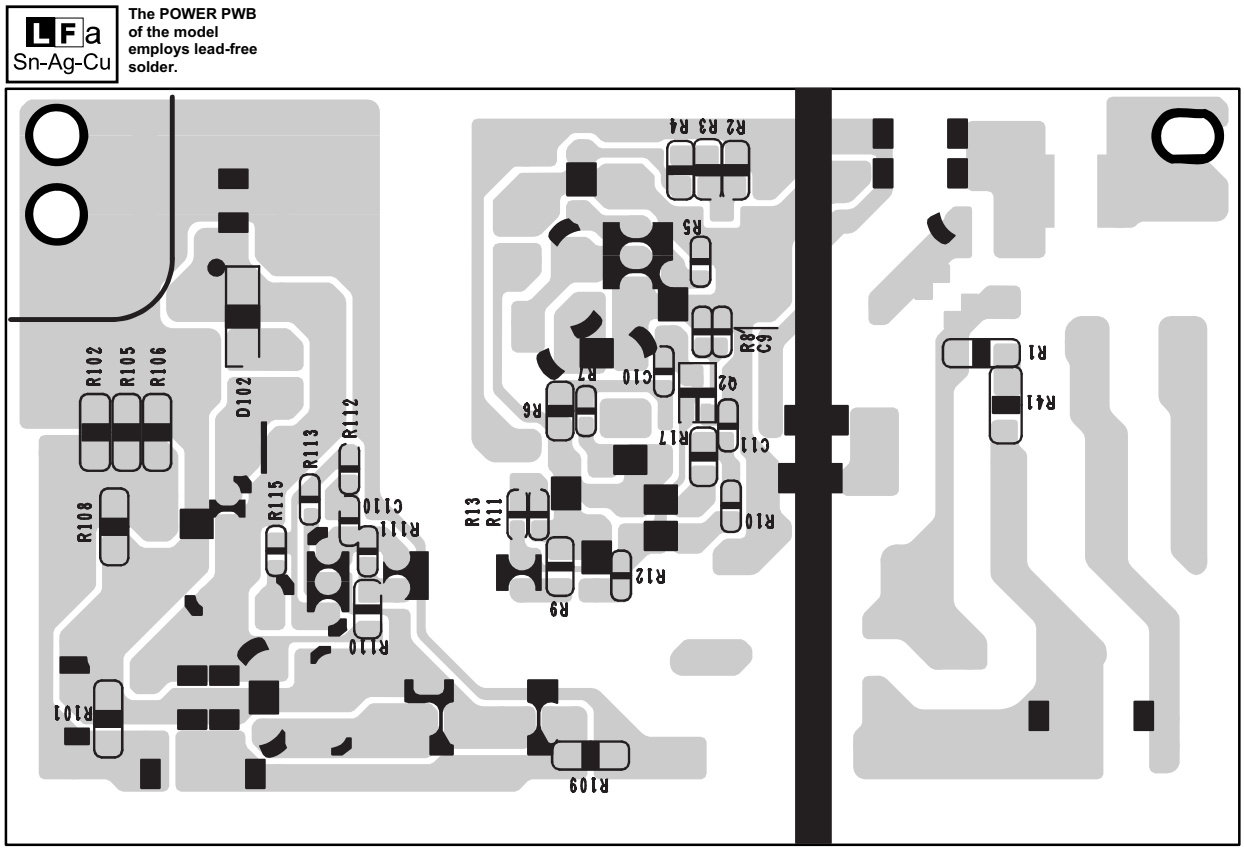

[4] Operation Panel PWB circuit

1. Operation Panel PWB circuit (1/2)

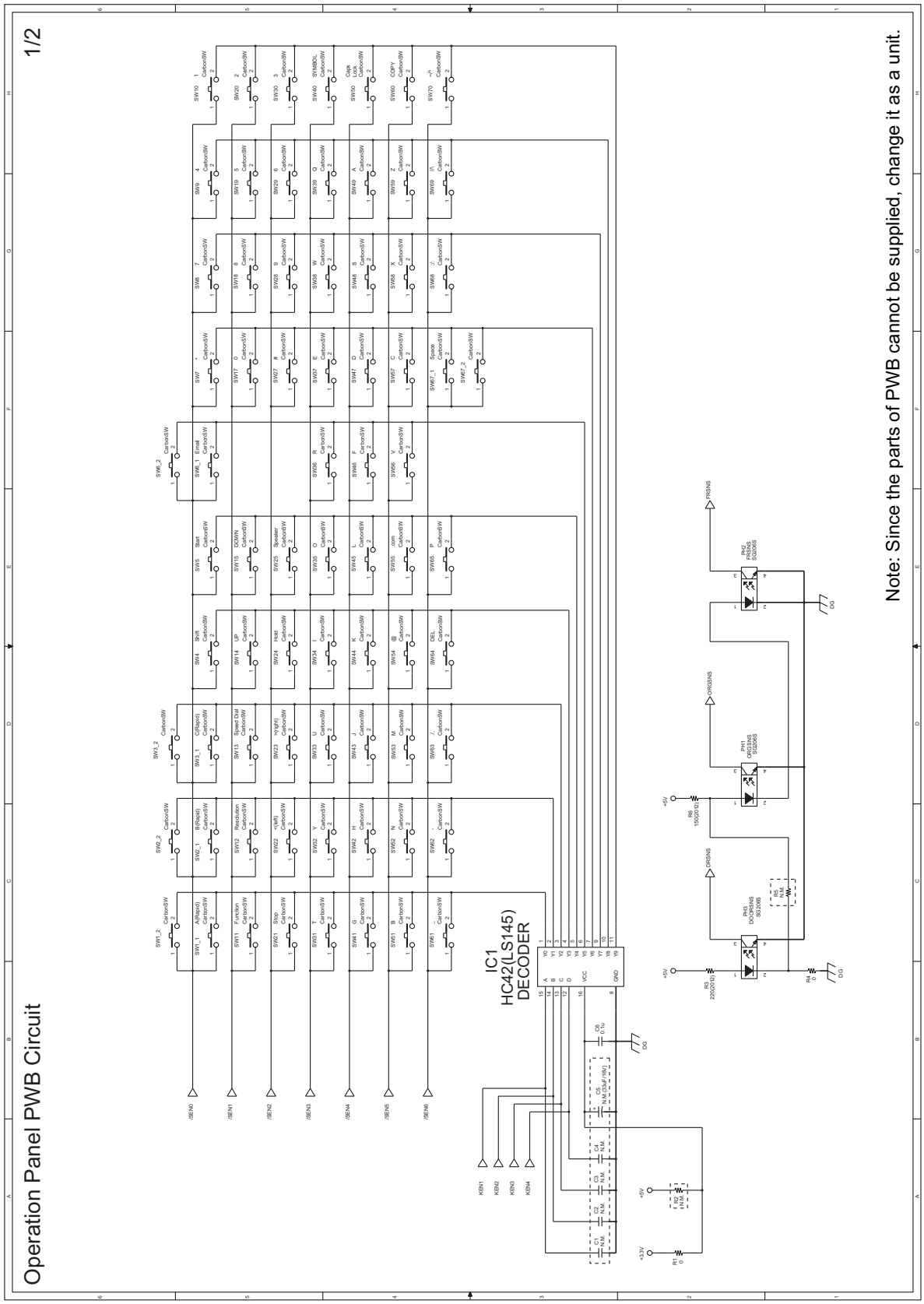

2. Operation Panel PWB circuit (2/2)

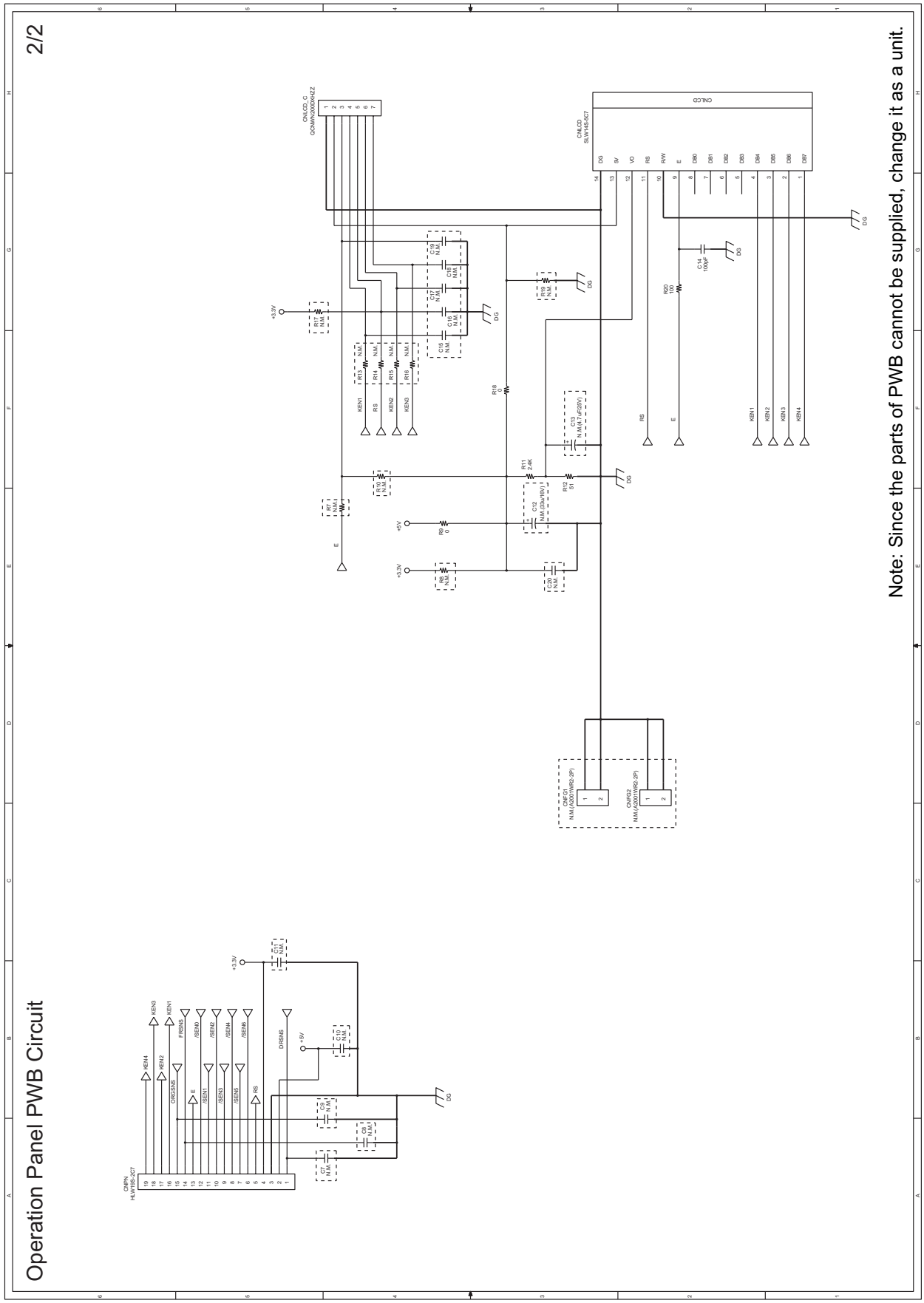

3. Operation Panel PWB parts layout (Top side)

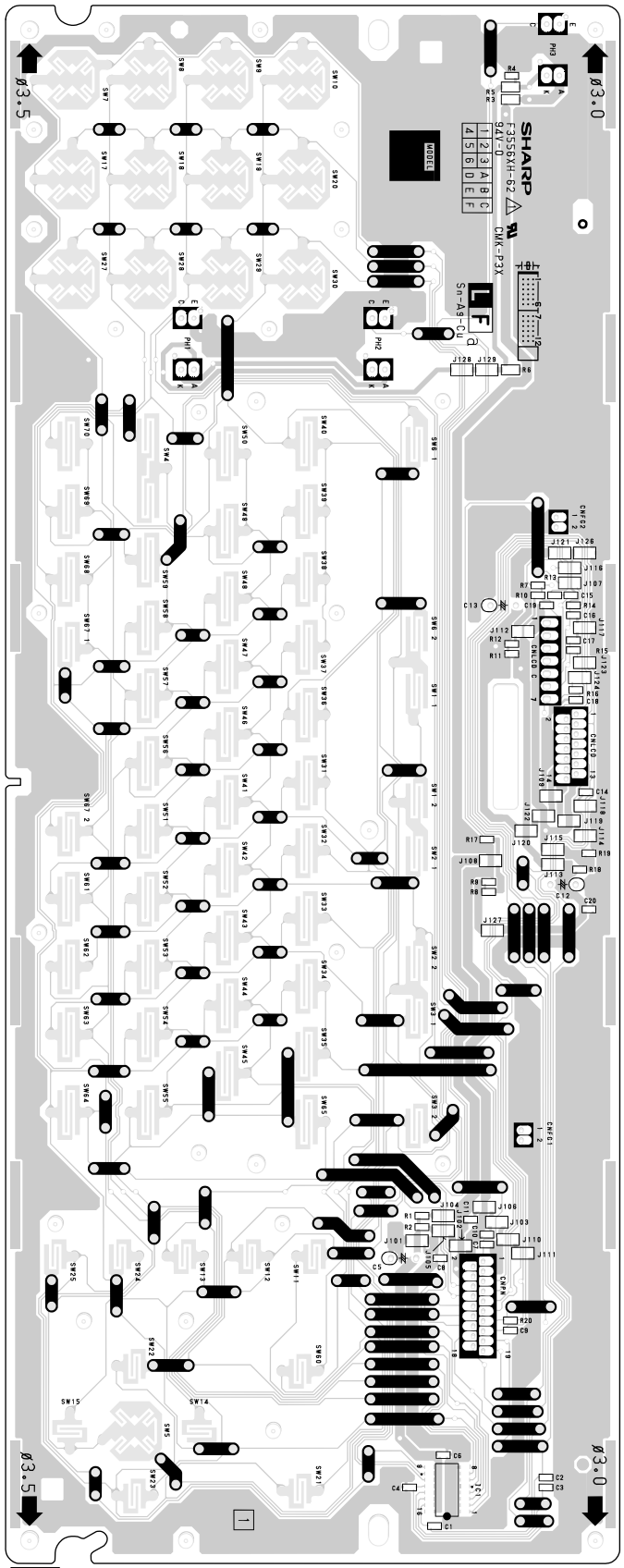

LFa Sn-Ag-Cu **The OPERATION PANEL PWB of the model employs lead-free solder.**

Note: Since the parts of PWB cannot be supplied, change it as a unit.

4. Operation Panel PWB parts layout (Bottom side)

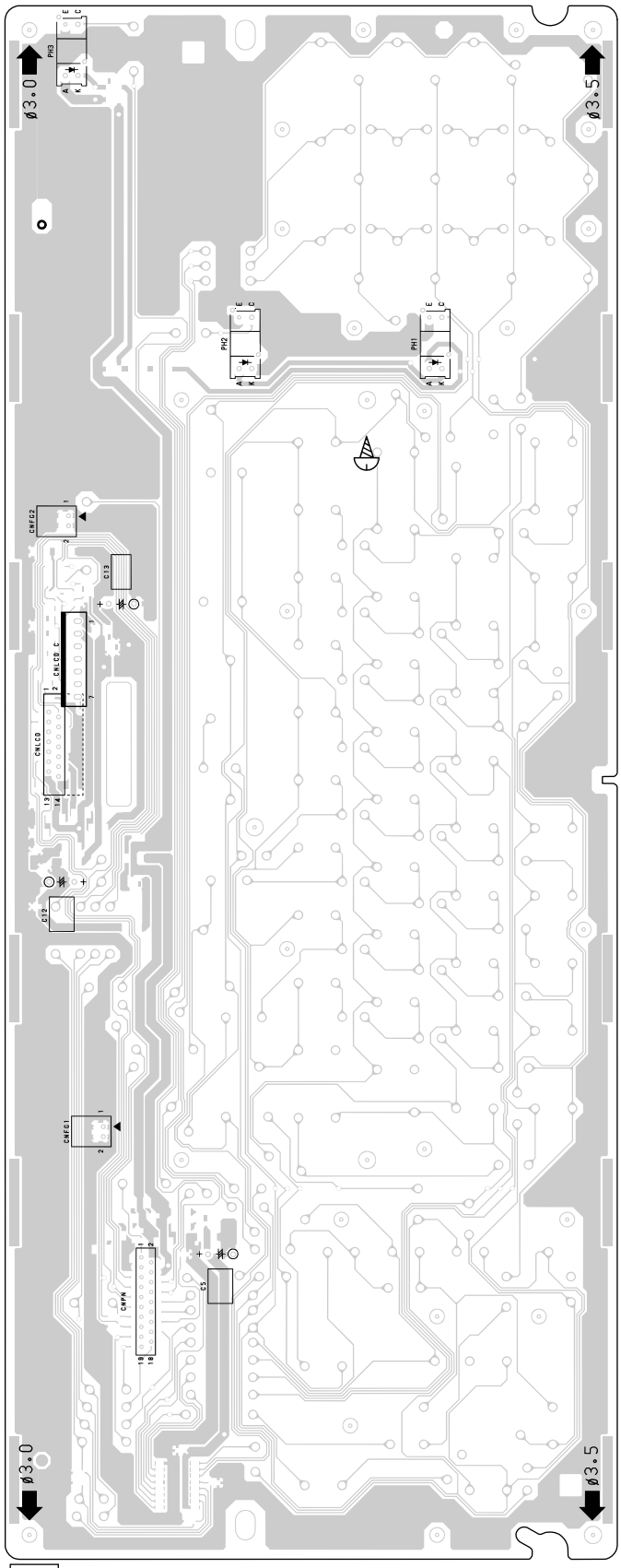

LFa Sn-Ag-Cu **The OPERATION PANEL PWB of the model employs lead-free solder.**

Note: Since the parts of PWB cannot be supplied, change it as a unit.

CHAPTER 7. OTHER

[1] Protocol

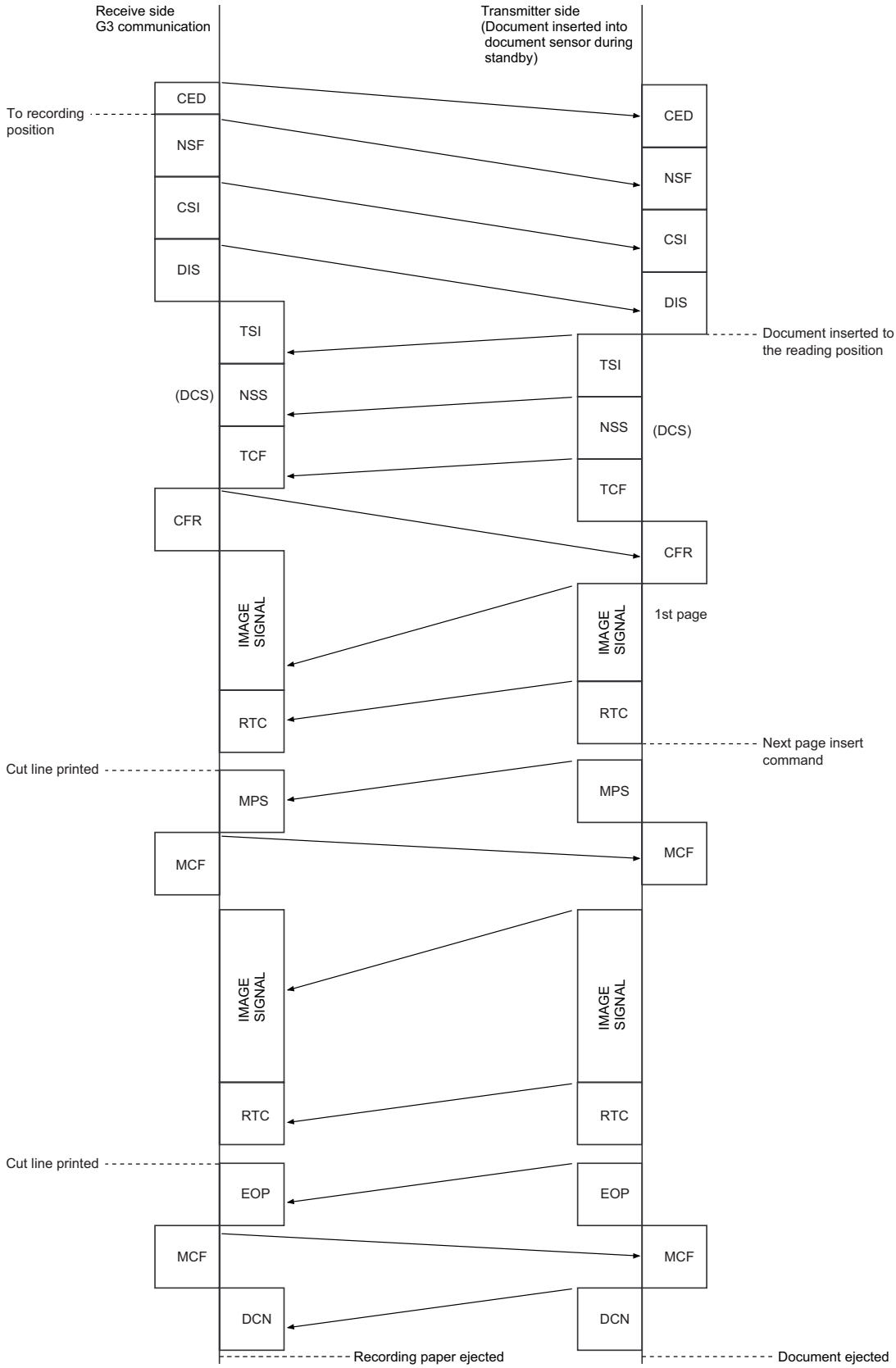

[2] Power on sequence

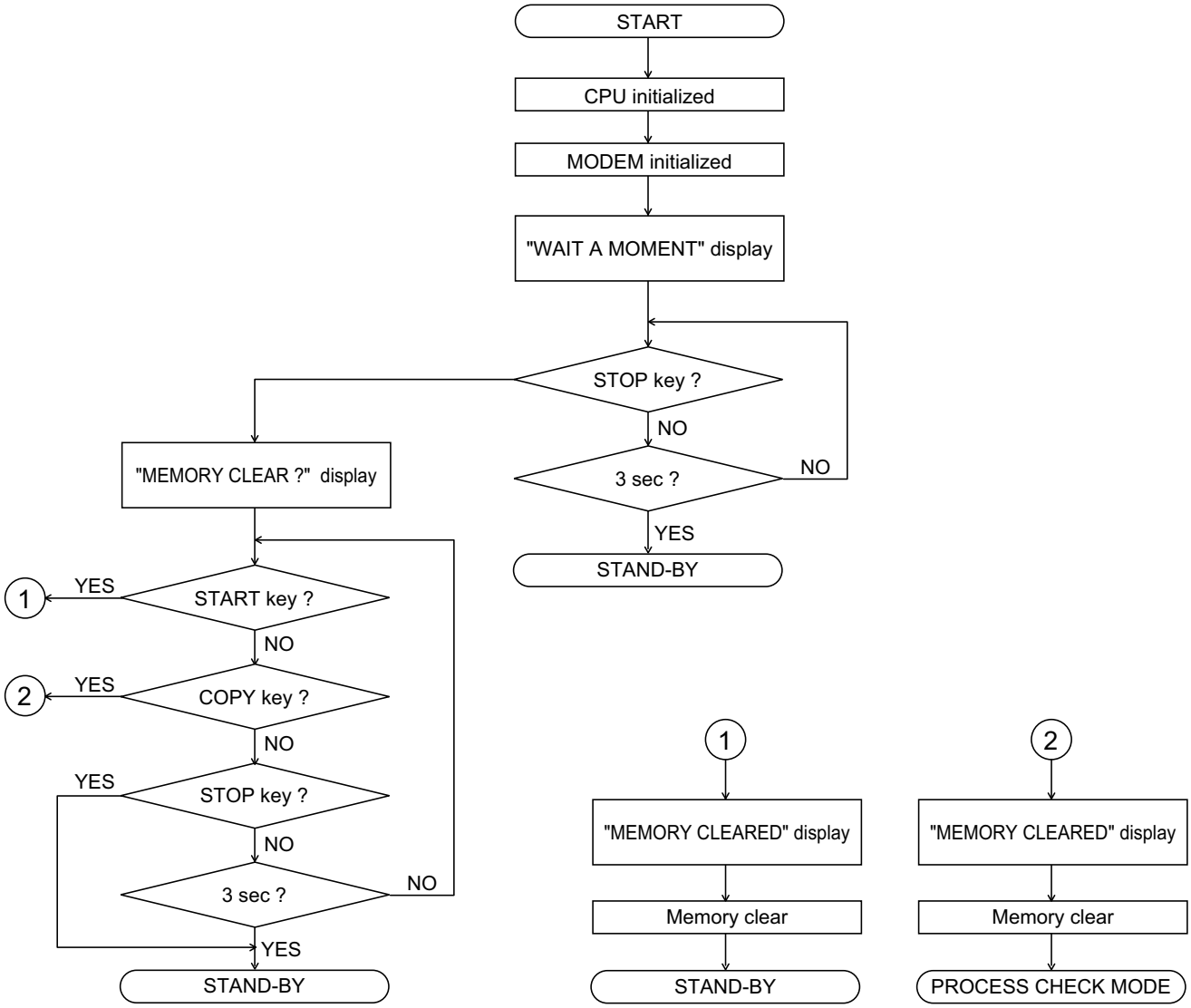

[3] Service tools

1. List

NO.	PARTS CODE	DESCRIPTION	REF NO.	QTY	PRICE RANK
1	DUNT-355DSC01	EXTENSION CONTROL PWB UNIT AND EXTENSION CABLE	-	1	CD

1.1. Extension board unit

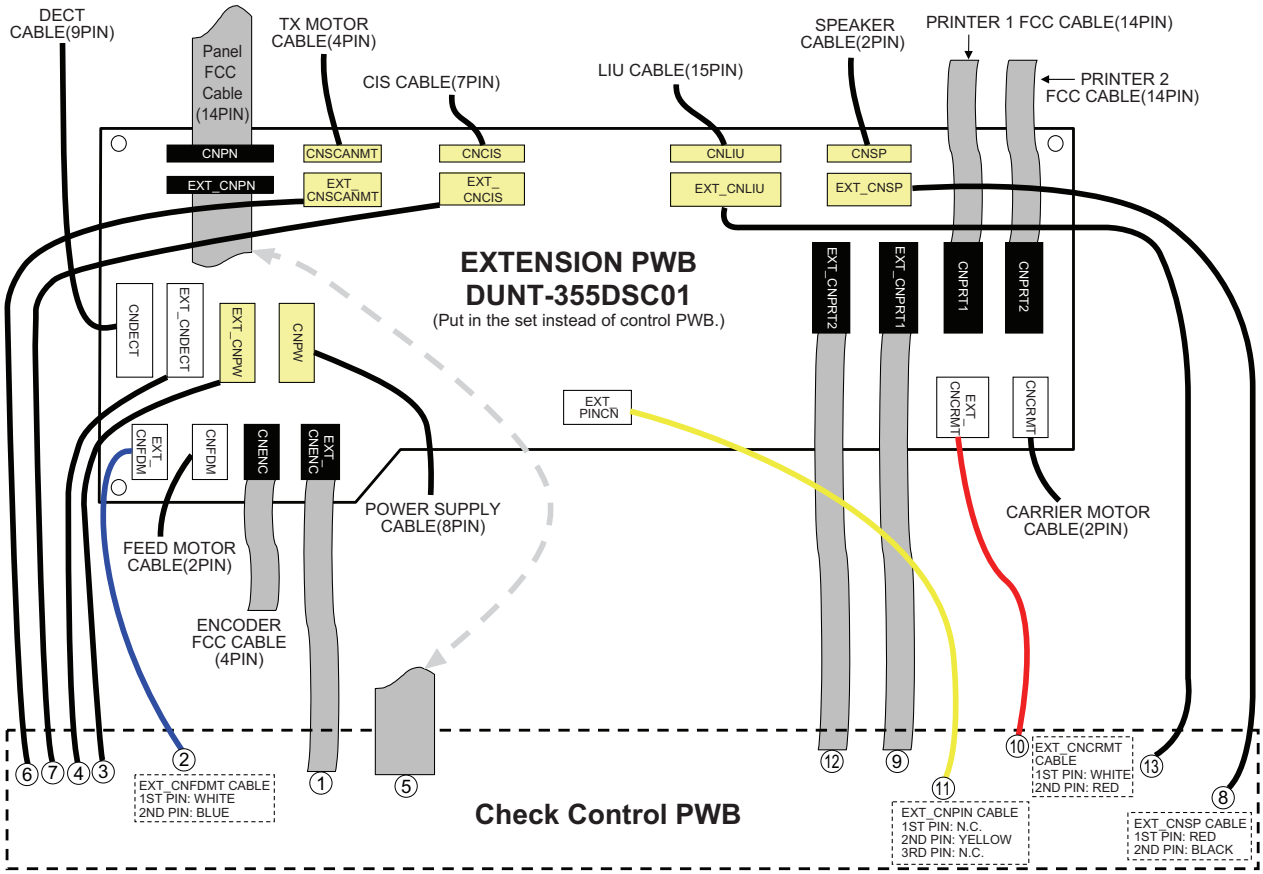

NO.	PARTS CODE	DESCRIPTION	REF NO.	QTY	PRICE RANK
1	QCNWG239DSCZZ	ENCODER EXTENSION FCC CABLE (4PIN)	-	1	AQ
2	QCNWG240DSCZZ	FEED MOTOR EXTENSION CABLE (2PIN)	-	1	AS
3	QCNWG241DSCZZ	POWER SUPPLY EXTENSION CABLE (8PIN)	-	1	BA
4	QCNWG242DSCZZ	DECT EXTENSION CABLE (9PIN)	-	1	BA
5	QCNWG243DSCZZ	PANEL EXTENSION FCC CABLE (14PIN)	-	1	AQ
6	QCNWG244DSCZZ	TX MOTOR EXTENSION CABLE (4PIN)	-	1	AW
7	QCNWG245DSCZZ	CIS EXTENSION CABLE (7PIN)	-	1	AZ
8	QCNWG247DSCZZ	SPEAKER EXTENSION CABLE (2PIN)	-	1	AS
9	QCNWG248DSCZZ	PRINTER1 EXTENSION FCC CABLE (14PIN)	-	1	AT
10	QCNWG249DSCZZ	CARRIER MOTOR EXTENSION CABLE (2PIN)	-	1	AS
11	QCNWG257DSCZZ	PIN EXTENSION CABLE (3PIN)	-	1	AX
12	QCNWG258DSCZZ	PRINTER2 EXTENSION FCC CABLE (14PIN)	-	1	AT
13	QCNWG321DSCZZ	LIU EXTENSION CABLE (15PIN)	-	1	BD
14	QCNCM705GAF04	CONNECTOR (7PIN)	CNCIS	2	AD
15	QCNCM7014SC0B	CONNECTOR (2PIN)	CNCRMT	2	AD
16	QCNCW2556SC0D	CONNECTOR (4PIN)	CNENC	2	AH
17	QCNCM7014SC0B	CONNECTOR (2PIN)	CNFDMT	2	AD
18	QCNCM705RAF04	CONNECTOR (16PIN)	CNLIU	2	AE
19	QCNCW2556SC1I	CONNECTOR (19PIN)	CNPN	2	AG
20	QCNCW2556SC1D	CONNECTOR (14PIN)	CNPRT1/2	4	AH
21	QCNCM705HAF04	CONNECTOR (8PIN)	CNPW	2	AD
22	QCNCM7014SC1C	CONNECTOR (13PIN)	CNDECT	2	AC

NO.	PARTS CODE	DESCRIPTION	REF NO.	QTY	PRICE RANK
23	QCNCM705DAF04	CONNECTOR(4PIN)	CNSCANMT	2	AC
24	QCNCM705BAF04	CONNECTOR (2PIN)	CNSP	2	AB
25	QCNCM705CAF04	CONNECTOR (3PIN)	CNPIN	1	AC
26	VHPGP1S094HCZ	PHOTO TRANSISTOR	PH900	1	AG
27	VRS-TV2AB221J	RESISTOR (1/10W 220Ω ± 5%)	R905	1	AA

2. Relay board unit

1. Remove the Control PWB from this unit, and mount the board unit instead.

   Before connecting the wiring to the relay board unit, set the test PWB switches to the fixed position.

2. The setting is as follows.

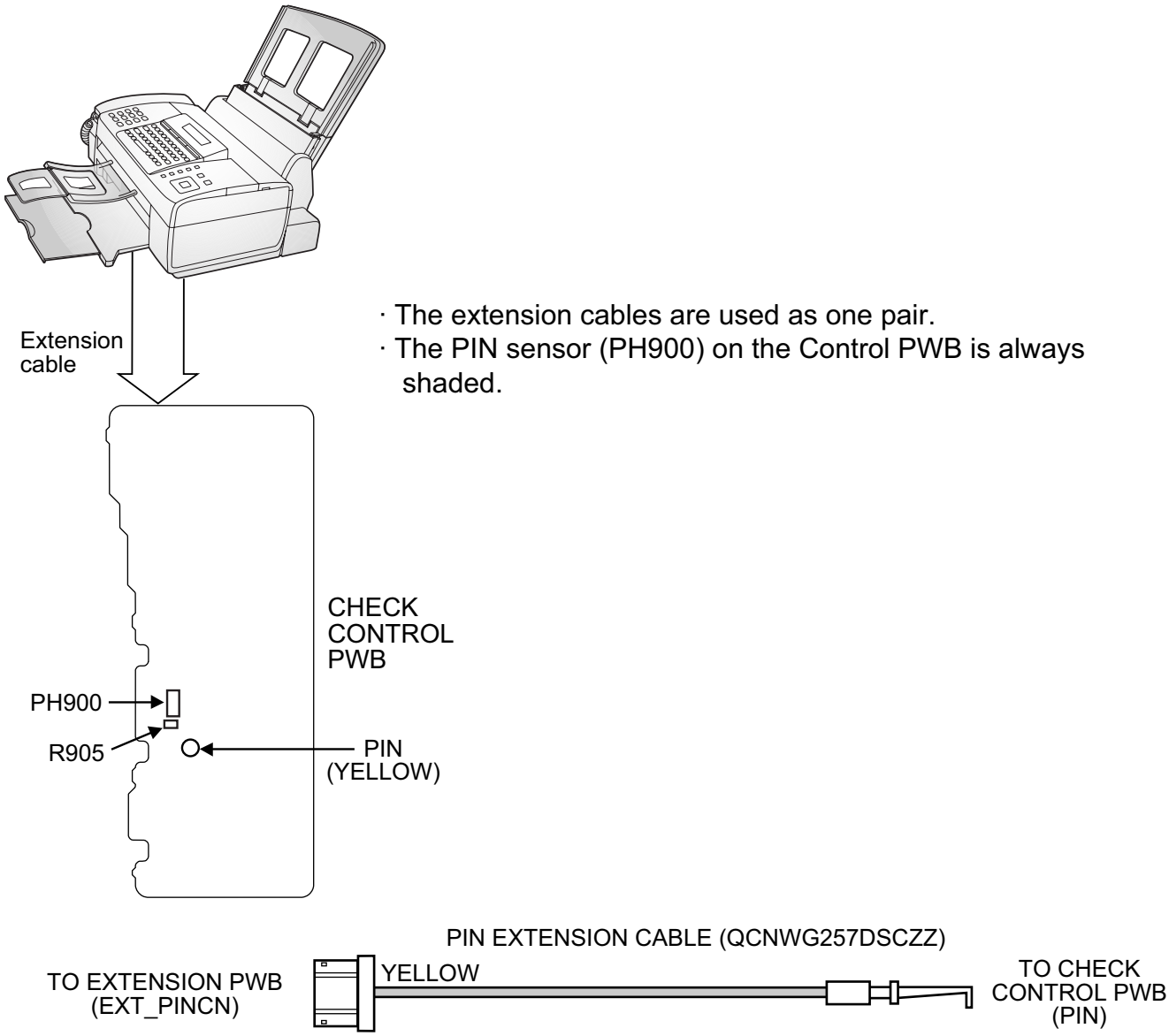

3. Shading paper

- The white and black basis is applied to remember the shading waveform. Be sure to perform this operation when replacing the battery or replacing the control PWB. Execute in the shading mode of DIAG mode.

SHADING WAVE MEMORY STANDARD PAPER (PSHEZ3579SCZZ)

[4] Rewriting version up the FLASH ROM

1. Preparations

Before updating the firmware, please make sure that you can browse the embedded Web Page by input the device IP address into the URL box of the browser.

The example of connection is below:

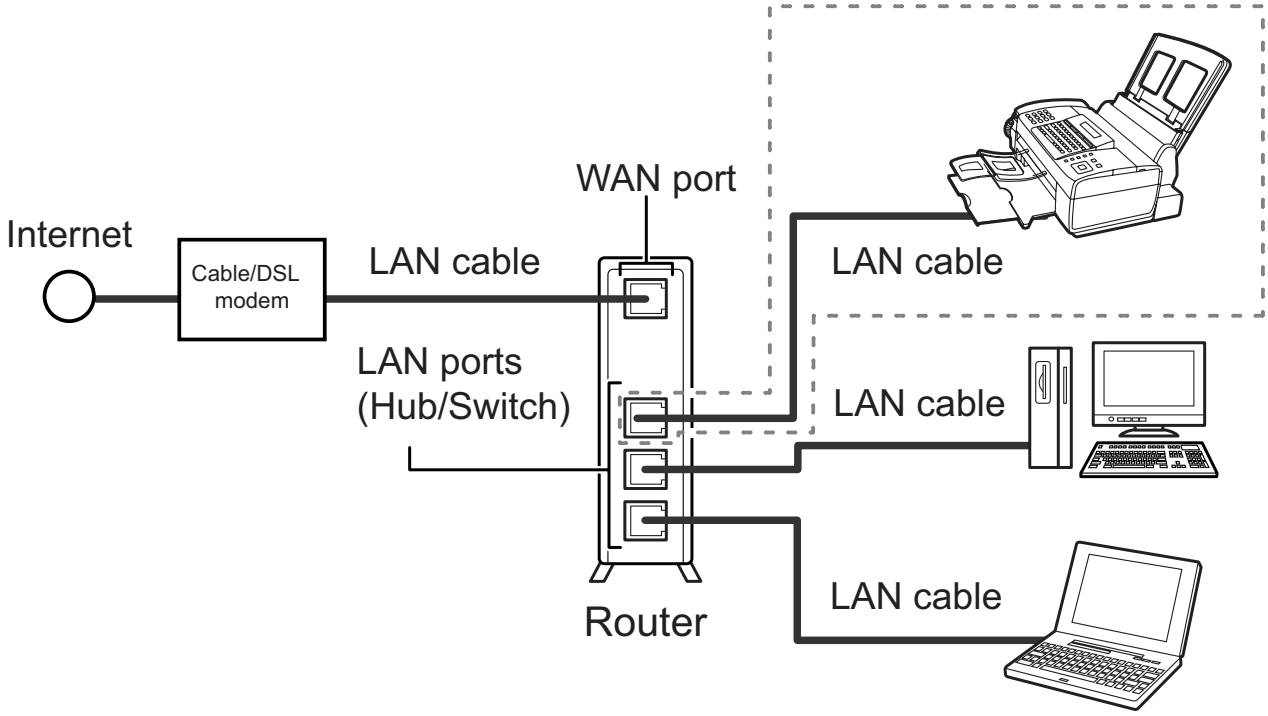

2. Operations

1. Press Function key, ⋊ key, 8 key, 7 key and # key. “FIRMWARE VERSION UP” is displayed on the upper LCD.
   Then press 2 key. “FIRMWARE UPDATE/PRESS START KEY” is displayed on the LCD.
   Then press START key. “FIRMWARE UPDATE/WATING FOR DATA” is displayed on the LCD.
2. Open Web browser and enter http://IP address of the machine/maint.htm in the edit box for URL and press Enter key.
   Then the below page will be shown.
   (Sampling: UX-B800DE)

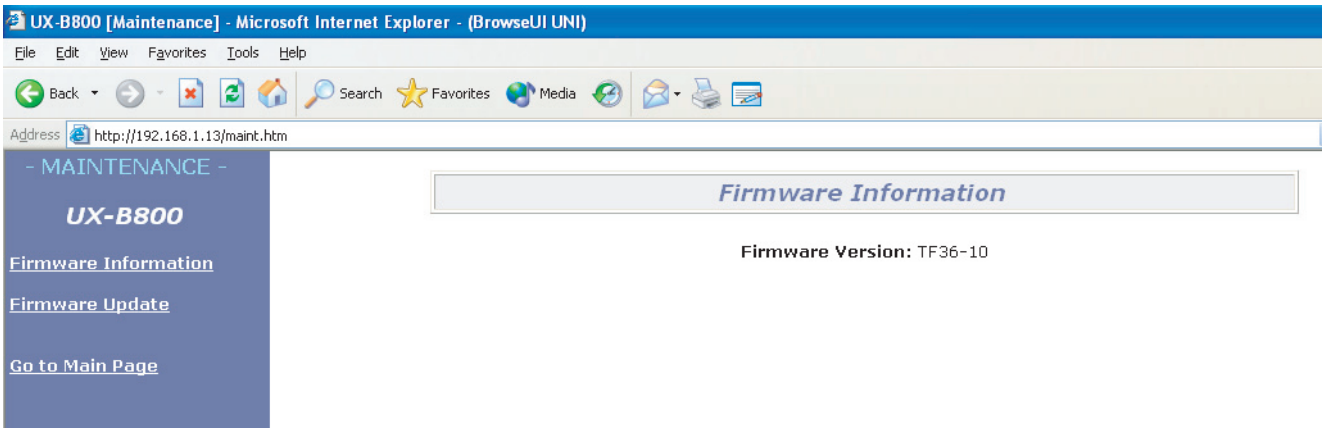

3. Click Firmware Update in the menu pane. Then the below page will be shown. If it says that the machine is not ready, please retry from step 1.

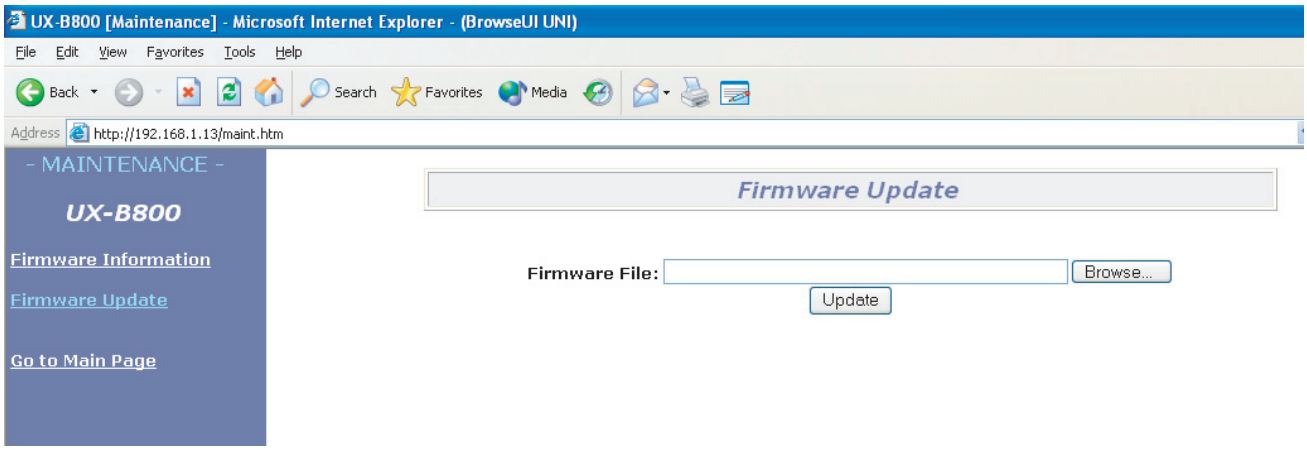

4. Click Browse button, choice the new firmware file and click Open button. Then the below page will b shown.

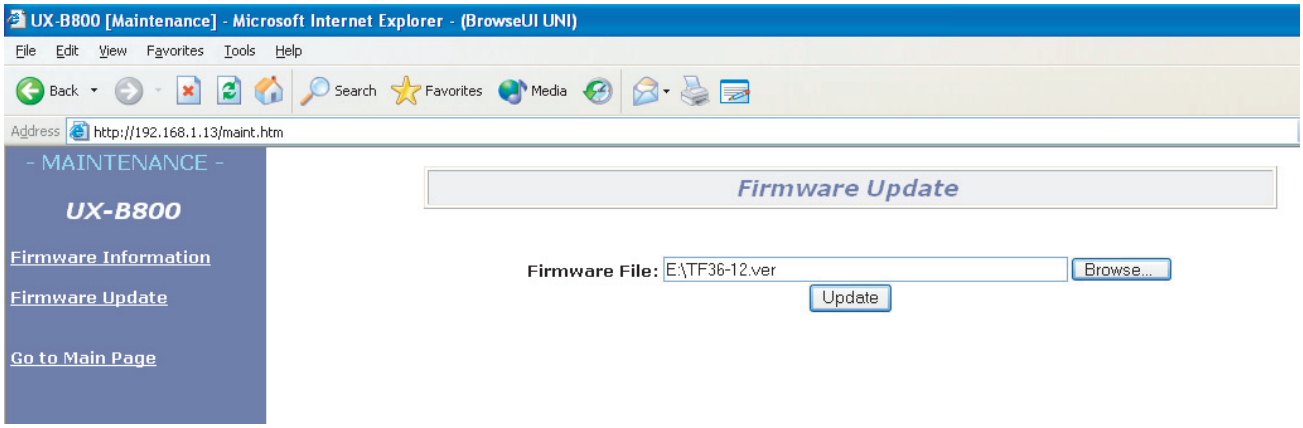

5. Click Update button. Then “DO NOT POWER DOWN!/UPDATING” is displayed on the LCD. A few minutes later, the below page will be shown.

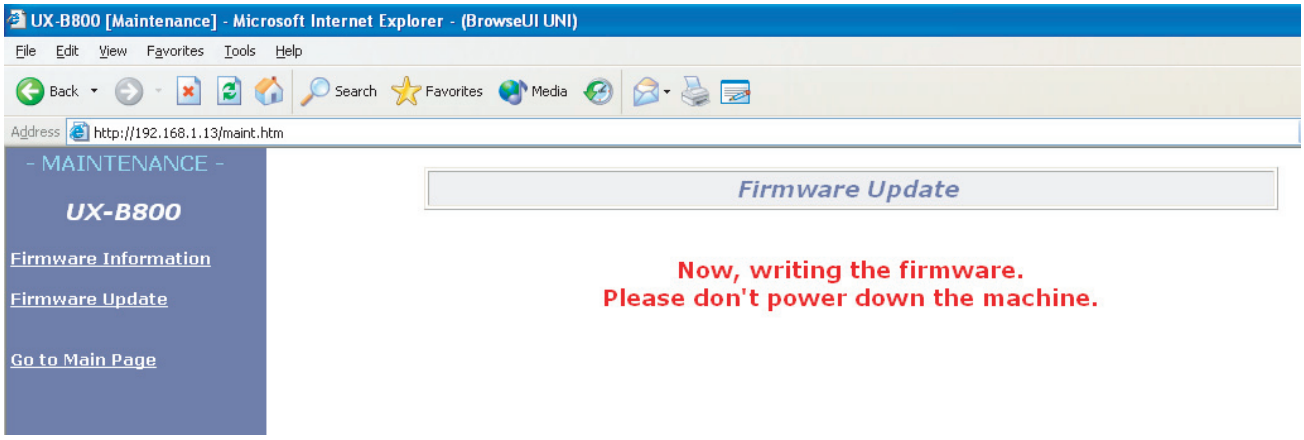

6. A few minutes later, the device will restart automatically.
7. After the machine restarts, the below page will be shown.

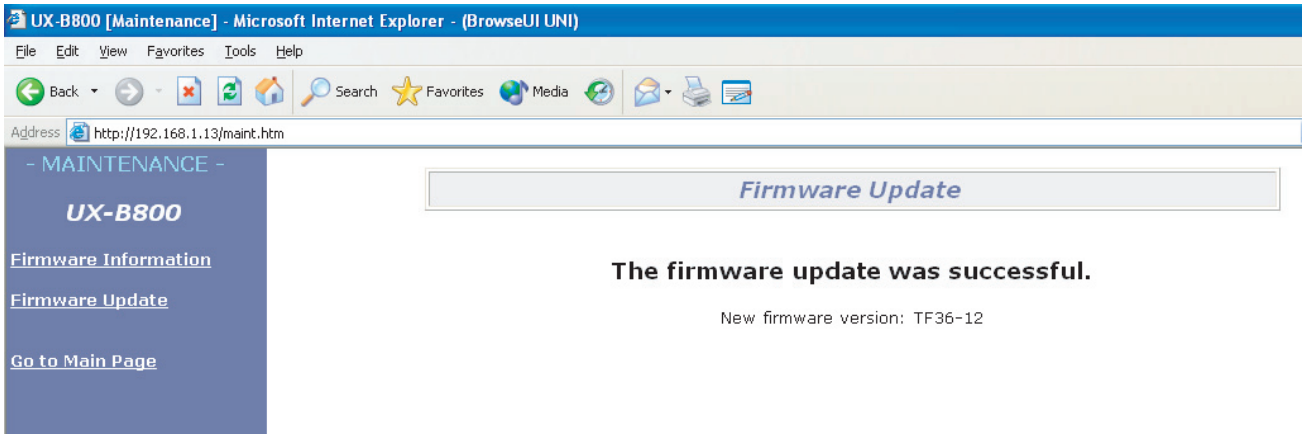

- MEMO -

SHARP PARTS GUIDE

No. 00ZUXB800ASME

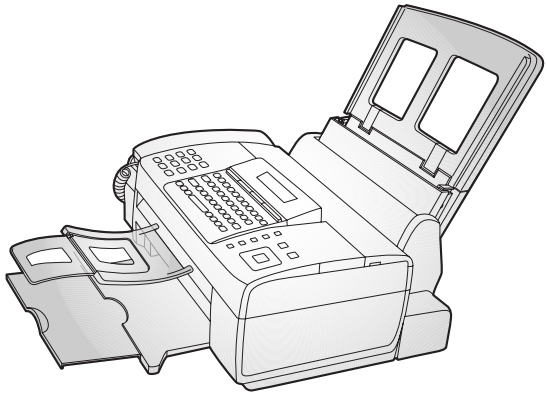

FACSIMILE

MODEL UX-B800A

MODEL	SELECTION CODE	DESTINATION
UX-B800	A	Australia

CONTENTS

[1] Cabinet,etc.

[2] Operation panel unit/Document guide upper

[3] Paper hopper unit

[4] Packing material & Accessories

[5] Control PWB unit

[6] LIU PWB unit

[7] Power supply PWB unit

[8] Operation panel PWB unit

■ INDEX

Parts marked with "⚠" are important for maintaining the safety of the set. Be sure to replace these parts with specified ones for maintaining the safety and performance of the set.

SHARP CORPORATION

This document has been published to be used for after sales service only.
The contents are subject to change without notice.

[1] Cabinet,etc.

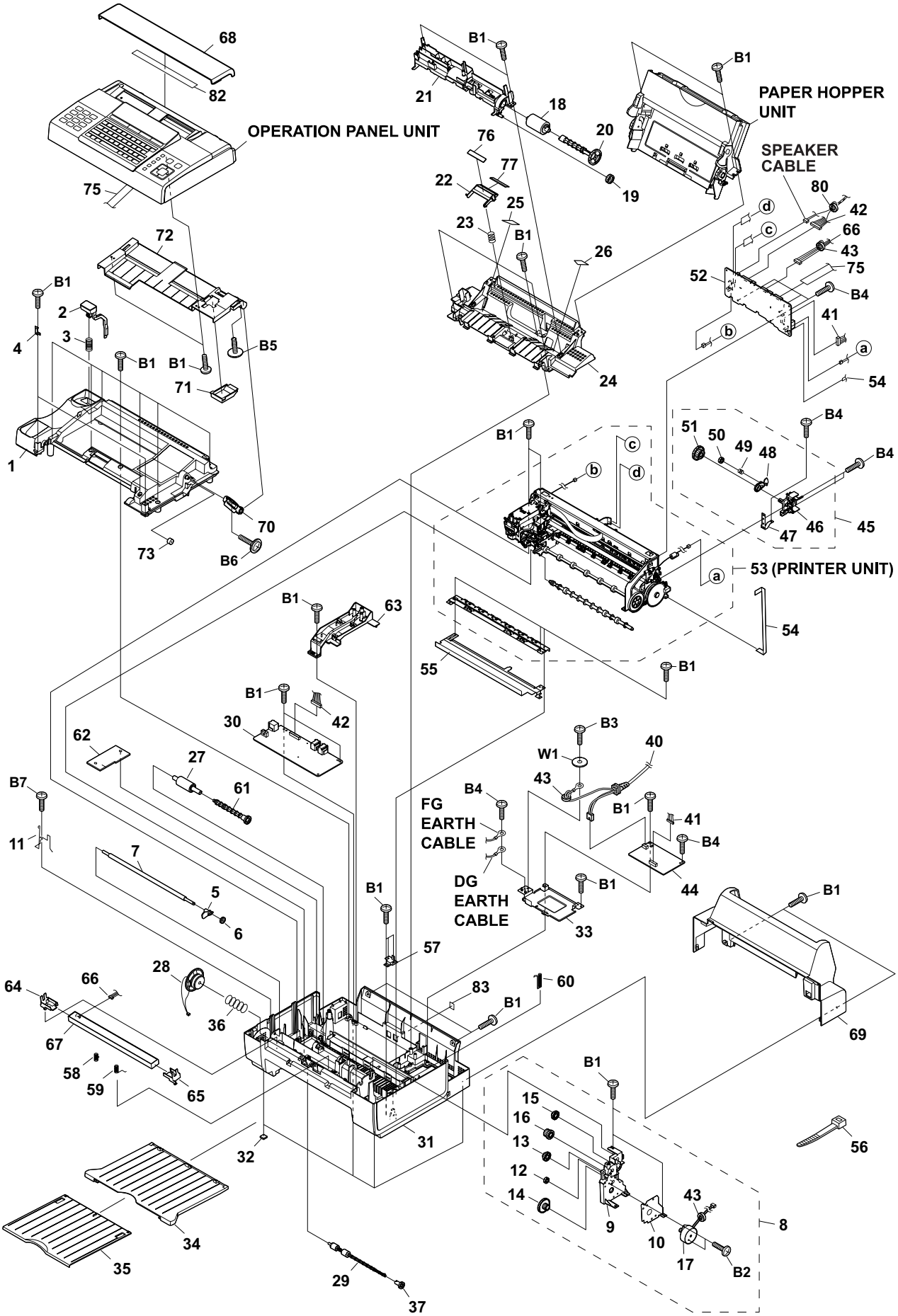

NO.	PARTS CODE	PRICE RANK	NEW MARK	PART RANK	DESCRIPTION
[1] Cabinet,etc.					
1	GCOVA2540XHSA	BC		C	Top cover
2	MLEVP2428XHZZ	AK		C	Hook switch lever
3	MSPRC3634XHZZ	AE		C	Hook switch lever spring
4	MSPRP3119XHZZ	AC		C	Panel lock lever spring
5	LBSHP2169XHZZ	AF		C	Back bearing
6	NGERH2641XHZZ	AE		C	Back gear,19Z
7	NROLR2549XHZZ	AU		C	Back roller
8	CFRM-2278XH01	BD		C	TX driver frame unit
9	LFRM-2278XHZZ	AT		C	TX driver frame
10	LPLTM3436XHZZ	AG		C	Radiation plate
11	MSPRD3636XHZZ	AE		C	Back roller earth spring
12	NGERH2611XHZZ	AE		C	Idler gear,18Z
13	NGERH2639XHZZ	AF		C	Reduction gear,16/28Z
14	NGERH2718XHZZ	AP		C	Reduction gear,20/77Z
15	NGERH2719XHZZ	AP		C	Reduction gear,17/30Z
16	NGERH2720XHZZ	AP		C	Reduction gear,25/30Z
17	RMOTS2209XHZZ	AV		B	TX motor
18	CROLR2362AX01	AN		C	PU roller ass'y
19	NGERH2721XHZZ	AP		C	Idler gear,28Z
20	NSFTZ2367XHZZ	AG		C	PU roller shaft
21	PGiDM2728XHZZ	AT		C	PU guide upper
22	LPLTP2884AXZA	AP		C	Separate plate
23	MSPRC3406XHZZ	AD		C	Separate plate spring
24	PGiDM2729XHSA	AT		C	PU guide lower
25	PSHEZ3760XHZZ	AE		C	Guide sheet,left
26	PSHEZ3770XHZZ	AG		C	Guide sheet,right
27	CROLR2548XH01	AT		C	Paper feed roller ass'y
28	CCNWN495CXH01	AP		C	Speaker ass'y
29	CROLP2499XH01	AM		C	Exit roller ass'y
30	DCEKL259DXH14	BE	N	E	LIU PWB unit
31	GCABB2468XHSB	BC		D	Lower cabinet
32	GLEGG2078XHZZ	AD		C	Rubber leg
33	LPLTM3317XHZZ	AL		C	Shield plate
34	LPLTP3432XHSA	AW		C	Exit paper tray
35	LPLTP3433XHSA	AW		C	Extension exit paper tray
36	MSPRC3470XHZZ	AF		C	Speaker spring
37	NGERH2636XHZZ	AF		C	Document PO gear,21Z
⚠ 40	QACCL2102XHZZ	AY		B	AC cord ass'y
41	QCNWN200CXHZZ	AL		C	Power supply cable
42	QCNWN294DXHZZ	AQ	N	C	LIU cable
⚠ 43	RCORF2145XHZZ	AF		B	Core
⚠ 44	RDENT2228XHZZ	BF		E	Power supply PWB unit
45	CFRM-2277XH01	BD		C	ASF drive frame unit
46	LFRM-2277XHZZ	AT		C	ASF drive frame
47	LPLTM3431XHZZ	AG		C	RP earth plate
48	MARMP2046XHZZ	AH		C	Friction arm
49	MSPRC3387XHZZ	AD		C	Friction arm spring
50	NGERH2611XHZZ	AE		C	Idler gear,18Z
51	NGERH2717XHZZ	AP		C	ASF gear,30/42Z
52	DCEKC481XXHS1	BW	N	E	Control PWB unit (within ROM)
53	DUNTM342DXH01	BR		E	Printer unit
54	QCNWN263DXHZZ	AC		C	Flat cable
55	LPLTM3441XHZZ	AL		C	Paper exit upper plate
56	LBNDJ2006XHZZ	AA		C	Band(100mm)
57	LPLTM3437XHZZ	AG		C	TX driver frame unit earth plate
58	MSPRC3488XHZZ	AE		C	CIS spring,left
59	MSPRC3489XHZZ	AE		C	CIS spring,right
60	MSPRD3637XHZZ	AE		C	Exit roller earth spring
61	NSFTP2413XHZZ	AL		C	Paper feed roller shaft
62	PFLT-2039XHZZ	AK		C	Print cartridge felt
63	PGiDM2727XHZZ	AT		C	Cable guide
64	LHLDZ2322XHZZ	AK		C	CIS hopper,left
65	LHLDZ2323XHZZ	AK		C	CIS hopper,right
66	QCNWN253DXHZZ	AP		C	CIS cable
67	RUNTZ2145XHZZ	BN		B	CIS unit
68	GCOVA2538XHSA	BC		C	Document cover
69	GCOVA2539XHSA	BC		C	Back cover
70	MARMP2042XHZA	AF		C	Panel stopper
71	PCOVA2146XHSA	AY		C	Connector cover
72	PGiDM2723XHSA	AT		C	Document guide lower
73	PGUMM2225XHZZ	AG		C	Damper rubber
75	QCNWN499CXHZZ	AP		C	Panel cable
76	PSHEZ3293XHZZ	AH		C	Separate plate pad
77	PSHEZ3344XHZZ	AD		C	Separate sheet
⚠ 80	RCORF2137XHZZ	AF		B	Core
82	TLABH545KXHZZ	AE		D	Document set label
83	PSHEZ3410XHZZ	AB		C	Jack sheet
B1	XEBS730P10000	AC		C	Screw(3x10)
B2	XEBS730P08000	AC		C	Screw(3x8)
B3	LX-BZ2282XHZ7	AE		C	Screw with washer(4x6)
B4	XHBS730P06000	AC		C	Screw(3x6)
B5	LX-BZ2286XHZ7	AE		C	Screw(3x14)
B6	LX-BZ2138XHZ7	AD		C	Screw
B7	LX-BZ2234XHZ7	AA		C	Screw(3x10)

NO.	PARTS CODE	PRICE RANK	NEW MARK	PART RANK	DESCRIPTION
[1] Cabinet,etc.					
W1	XWHS740−08100	AA		C	Washer

[2] Operation panel unit/Document guide upper

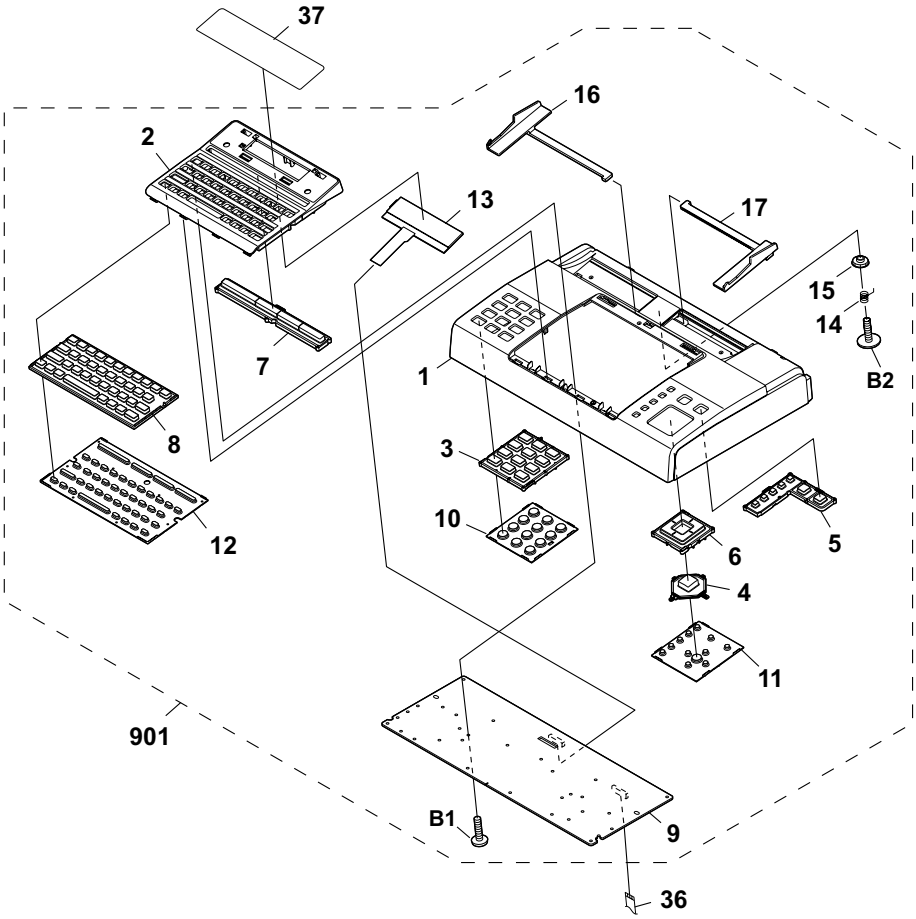

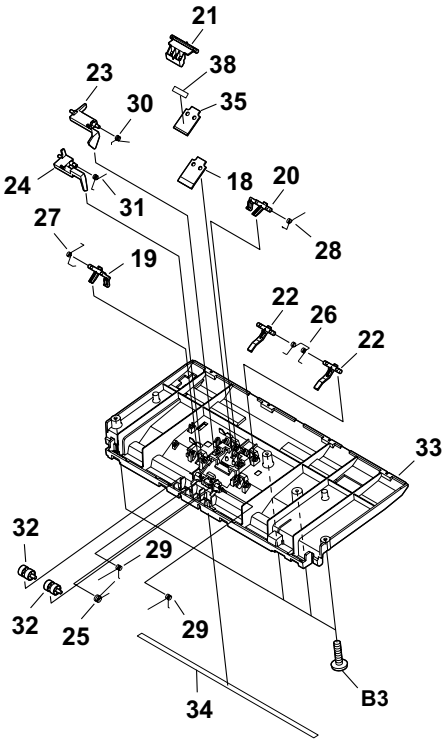

NO.	PARTS CODE	PRICE RANK	NEW MARK	PART RANK	DESCRIPTION
[2] Operation panel unit/Document guide upper					
1	GCASP2197XHSA	BA		D	Panel case
2	GCASP2198XHSA	BA		D	Sub panel case
3	JBTN-2537XHSA	AS		C	12 key
4	JBTN-2538XHSA	AS		C	Start key
5	JBTN-2539XHSA	AS		C	Copy/Stop key
6	JBTN-2541XHSA	AS		C	Cursol key
7	JBTN-2542XHSC	AS		C	E-mail key
8	JBTN-2544XHSA	AS		C	Qwerty key
9	DCEKP343DXH01	AU		E	Operation panel PWB unit
10	QCNTM2054XHZZ	AP		C	12 key rubber
11	QCNTM2055XHZZ	AP		C	Function key rubber
12	QCNTM2056XHZZ	AT		C	Qwerty key rubber
13	VVLLMG2025TPR	BA		B	LCD
14	MSPRC3630XHZZ	AE		C	Pinion gear spring
15	NGERP2318XHZZ	AD		C	Pinion gear
16	PGiDM2724XHSA	AT		C	Hopper guide,left
17	PGiDM2725XHSA	AT		C	Hopper guide,right
18	LPLTG3429XHZZ	AF		C	Separate rubber
19	LPLTP3257XHZL	AE		C	Sub feed plate,left
20	LPLTP3257XHZR	AE		C	Sub feed plate,right
21	LPLTP3430XHZZ	AW		C	Separation plate
22	MARMP2034XHZA	AF		C	Paper feed plate
23	MLEVP2426XHZZ	AH		C	Front sensor lever
24	MLEVP2427XHZZ	AK		C	Original sensor lever
25	MSPRD3398XHZZ	AE		C	Separate spring
26	MSPRD3399XHZZ	AE		C	Paper feed spring
27	MSPRD3656XHZZ	AE		C	Sub feed spring,left
28	MSPRD3657XHZZ	AE		C	Sub feed spring,right
29	MSPRD3495XHZZ	AE		C	PO pinch roller spring
30	MSPRD3632XHZZ	AE		C	Front sensor lever spring
31	MSPRD3633XHZZ	AE		C	Original sensor lever spring
32	NRŌLP2332XHZA	AL		C	Pinch roller
33	PGiDM2726XHZZ	AT		C	Document guide upper
34	PSHEF3928XHZZ	AN		C	Static brush sheet
35	PSHEP3939XHZZ	AG		C	Separation sheet
36	QCNWN499CXHZZ	AP		C	Panel cable
37	HPNLH2458XHSD	AP		D	Decoration panel
38	PCUSU2238XHZZ	AE		C	Separate cushion
B1	XEBS726P08000	AE		C	Screw(2.6x8)
B2	LX-BZ2222XHZ7	AD		C	Screw(3x10)
B3	XEBS726P10000	AC		C	Screw(2.6x10)
	(Unit)				
901	DCEKP341DXH07	BQ	N	E	Operation panel unit

[3] Paper hopper unit

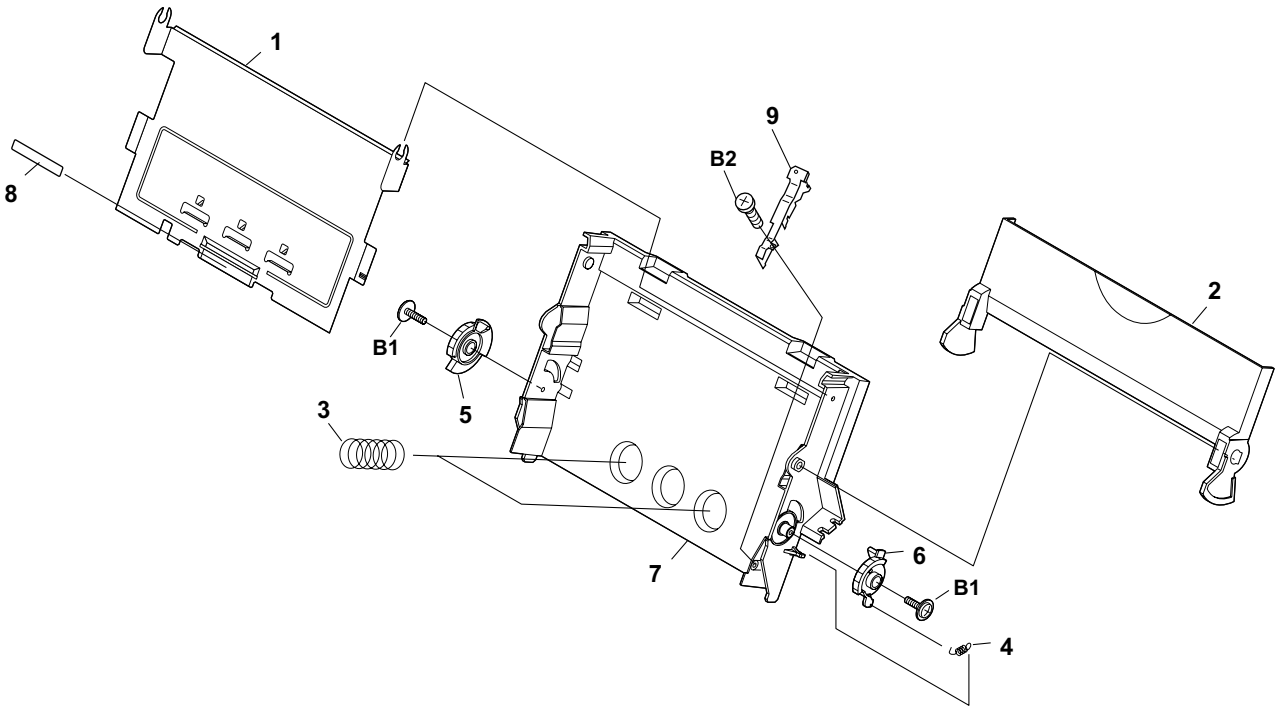

NO.	PARTS CODE	PRICE RANK	NEW MARK	PART RANK	DESCRIPTION
[3] Paper hopper unit					
1	LPLTM2924XHFW	AQ		C	Rotation plate
2	LPLTP3263XHSJ	AP		C	RP release plate
3	MSPRC3407XHZZ	AE		C	Coil spring
4	MSPRT2932XHFJ	AC		C	RP release spring
5	NGERH2365AXZZ	AD		C	RP release gear,left
6	NGERH2366AXZZ	AD		C	RP release gear,right
7	PHOP-2095XHVD	AU		C	Paper hopper
8	PSEL-2015XHZZ	AB		C	Paper pad
9	PGiDM2493XHVB	AL		C	A4 paper guide
B1	LX-BZ2222XHZ7	AD		C	Screw(3x10)
B2	XEBS730P10000	AC		C	Screw(3x10)

[4] Packing material & Accessories

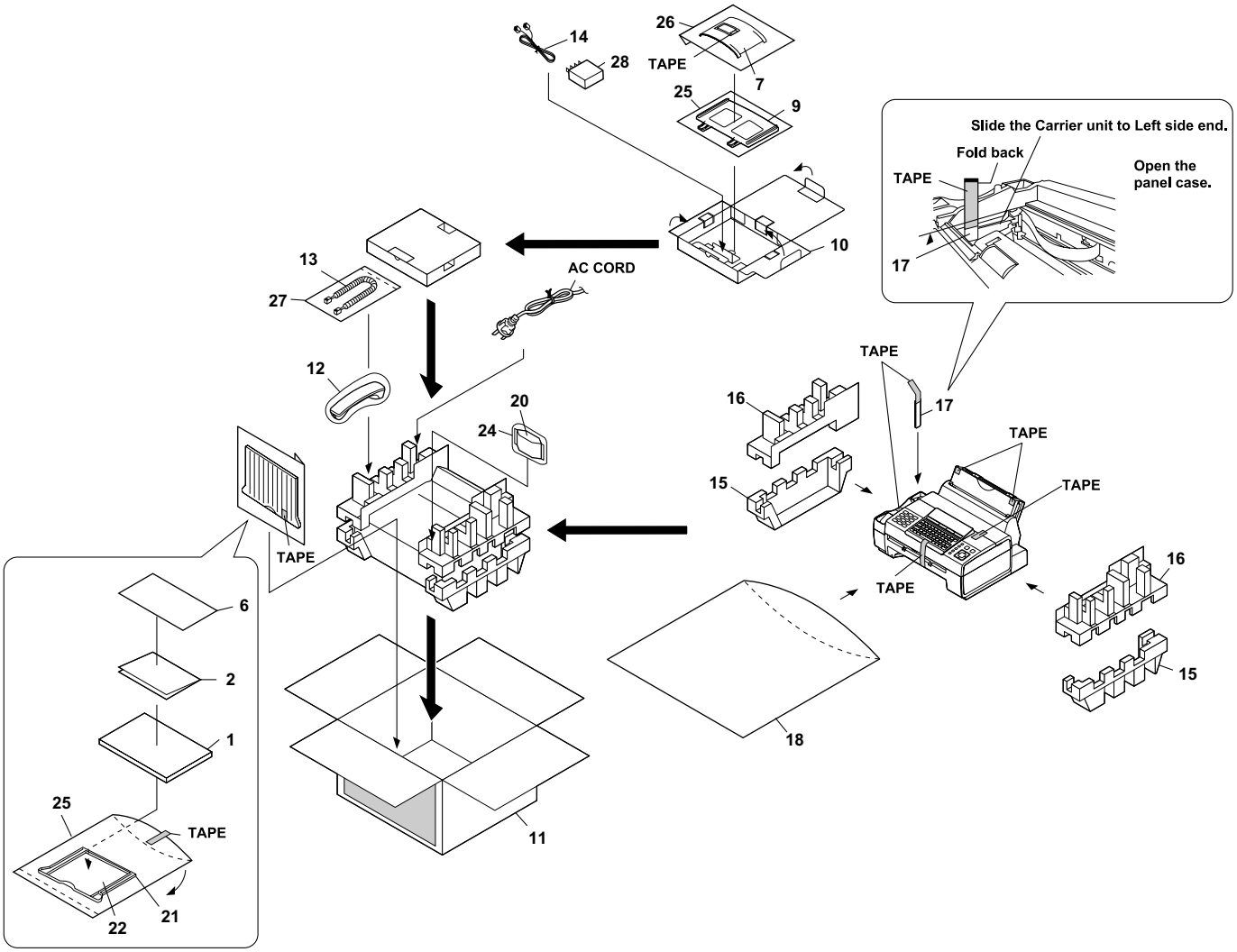

NO.	PARTS CODE	PRICE RANK	NEW MARK	PART RANK	DESCRIPTION
[4] Packing material & Accessories					
1	TiNSE4562XHTZ	AM	N	D	Operation manual
2	TCADH3939XHZZ	AF	N	D	Setup guide
6	TLABH415KXHSA	AK		D	Rapid key labels
7	CPLTP3434XH01	BB		C	Document exit tray/paper tray ass'y
9	LPLTP3442XHSA	AQ		C	Received document tray
10	SPAKA275HXHZZ	AQ		D	Pad A
11	CPAKC439HXH01	BA	N	D	Packing case with label
12	DUNTK245DXHPW	AX		E	Handset
13	QCNWG202DXHFW	AP		C	Handset cord
14	QCNWG0376AFZZ	AM		C	Telephone line cord
15	SPAKA441HXHZZ	AG	N	D	Packing add.,bottom
16	SPAKA442HXHZZ	AQ	N	D	Packing add.,top
17	SPAKA276HXHZZ	AQ		D	Carriage spacer
18	SPAKP274HXHZZ	AQ		D	Vinyl cover
20	UiNK-2046XHZZ	BN		A	Ink cartridge (Initial cartridge)
21	LPLTP3432XHSA	AW		C	Exit paper tray
22	LPLTP3433XHSA	AW		C	Extension exit paper tray
24	SPAKA364HXHZZ	AF		D	Ink cartridge protection
25	SSAKA2008XHZZ	AA		D	Polyethylene bag
26	SPAKP420DXHZZ	AF		D	Polyethylene bag
27	SSAKA3001CCZZ	AA		D	Polyethylene bag
28	QPLGZ9065AFZZ	AP		C	Adapter

NO.	PARTS CODE	PRICE RANK	NEW MARK	PART RANK	DESCRIPTION
[5] Control PWB unit					
1	UBATL2232XHZZ	AF		B	Battery(CR2032T23) [BAT1]
2	VRS-CG1JF101J	AA		C	Block resistor(100Ω 4) [BR100]
3	VRS-CG1JF101J	AA		C	Block resistor(100Ω 4) [BR101]
4	VRS-CG1JF101J	AA		C	Block resistor(100Ω 4) [BR102]
5	VRS-CG1JF101J	AA		C	Block resistor(100Ω 4) [BR103]
6	VRS-CG1JF101J	AA		C	Block resistor(100Ω 4) [BR104]
7	VRS-CG1JF101J	AA		C	Block resistor(100Ω 4) [BR105]
8	VRS-CG1JF101J	AA		C	Block resistor(100Ω 4) [BR106]
9	VRS-CG1JF103J	AC		C	Block resistor(10KΩ x4) [BR107]
10	VRS-CG1JF271J	AD		C	Block resistor(270Ω x4) [BR109]
11	VRS-CG1JF271J	AD		C	Block resistor(270Ω x4) [BR110]
12	VRS-CG1JF330J	AC		C	Block resistor(33Ω x4) [BR111]
13	VRS-CG1JF330J	AC		C	Block resistor(33Ω x4) [BR112]
14	VRS-CG1JF330J	AC		C	Block resistor(33Ω x4) [BR113]
15	VRS-CG1JF271J	AD		C	Block resistor(270Ω x4) [BR114]
16	VRS-CG1JF271J	AD		C	Block resistor(270Ω x4) [BR115]
17	VRS-CG1JF101J	AA		C	Block resistor(100Ω 4) [BR116]
18	VRS-CG1JF330J	AC		C	Block resistor(33Ω x4) [BR117]
19	VRS-CG1JF330J	AC		C	Block resistor(33Ω x4) [BR118]
20	VRS-CG1JF330J	AC		C	Block resistor(33Ω x4) [BR119]
21	VRS-CG1JF221J	AC		C	Block resistor(220Ω x4) [BR120]
22	VRS-CG1JF101J	AA		C	Block resistor(100Ω 4) [BR121]
23	VRS-CG1JF101J	AA		C	Block resistor(100Ω 4) [BR122]
24	VRS-CG1JF101J	AA		C	Block resistor(100Ω 4) [BR123]
25	VRS-CG1JF330J	AC		C	Block resistor(33Ω x4) [BR124]
26	VRS-CG1JF271J	AD		C	Block resistor(270Ω x4) [BR125]
27	VRS-CG1JF101J	AA		C	Block resistor(100Ω 4) [BR126]
28	VRS-CG1JF101J	AA		C	Block resistor(100Ω 4) [BR128]
29	VRS-CG1JF101J	AA		C	Block resistor(100Ω 4) [BR129]
30	VRS-CG1JF101J	AA		C	Block resistor(100Ω 4) [BR130]
31	VRS-CG1JF101J	AA		C	Block resistor(100Ω 4) [BR132]
32	VRS-CG1JF221J	AC		C	Block resistor(220Ω x4) [BR300]
33	VRS-CG1JF221J	AC		C	Block resistor(220Ω x4) [BR704]
34	VRS-CG1JF221J	AC		C	Block resistor(220Ω x4) [BR708]
35	VRS-CG1JF221J	AC		C	Block resistor(220Ω x4) [BR709]
36	VRS-CG1JF103J	AC		C	Block resistor(10KΩ x4) [BR713]
37	VRS-CG1JF000J	AB		C	Block resistor(0Ω x4) [BR715]
38	VRS-CG1JF000J	AB		C	Block resistor(0Ω x4) [BR716]
39	VRS-CG1JF103J	AC		C	Block resistor(10KΩ x4) [BR800]
40	VRS-CG1JF330J	AC		C	Block resistor(33Ω x4) [BRA00]
41	VRS-CG1JF330J	AC		C	Block resistor(33Ω x4) [BRA01]
42	VRS-CG1JF333J	AC		C	Block resistor(33KΩ 4) [BRA02]
43	VRS-CG1JF333J	AC		C	Block resistor(33KΩ 4) [BRA03]
44	VRS-CG1JF000J	AB		C	Block resistor(0Ω x4) [BRA04]
45	VRS-CG1JF000J	AB		C	Block resistor(0Ω x4) [BRA05]
46	VCKYCZ1CF104Z	AB		C	Capacitor(16WV 0.1μ F) [C100]
47	VCKYCZ1CF104Z	AB		C	Capacitor(16WV 0.1μ F) [C101]
48	VCKYCZ1CF104Z	AB		C	Capacitor(16WV 0.1μ F) [C102]
49	VCKYCZ1CF104Z	AB		C	Capacitor(16WV 0.1μ F) [C103]
50	VCKYCZ1CF104Z	AB		C	Capacitor(16WV 0.1μ F) [C104]
51	VCCCCZ1EH7R0D	AA		C	Capacitor(25WV 7PF) [C105]
52	VCCCCZ1EH7R0D	AA		C	Capacitor(25WV 7PF) [C106]
53	VCKYTV1AF106Z	AC		C	Capacitor(10WV 10μ F) [C107]
54	VCKYCZ1CF104Z	AB		C	Capacitor(16WV 0.1μ F) [C108]
55	VCKYCZ1CF104Z	AB		C	Capacitor(16WV 0.1μ F) [C109]
56	VCKYTV1AF106Z	AC		C	Capacitor(10WV 10μ F) [C110]
57	VCKYCY1AF105Z	AC		C	Capacitor(10WV 1μ F) [C112]
58	VCCCCZ1EH270J	AA		C	Capacitor(25WV 27PF) [C114]
59	VCCCCZ1EH270J	AA		C	Capacitor(25WV 27PF) [C115]
60	VCKYCZ1CF104Z	AB		C	Capacitor(16WV 0.1μ F) [C119]
61	VCKYCZ1AB104K	AC		C	Capacitor(10WV 0.1μ F) [C121]
62	VCKYCZ1CF104Z	AB		C	Capacitor(16WV 0.1μ F) [C122]
63	VCKYCZ1CF104Z	AB		C	Capacitor(16WV 0.1μ F) [C125]
64	VCKYCZ1CF104Z	AB		C	Capacitor(16WV 0.1μ F) [C126]
65	VCKYCZ1CF104Z	AB		C	Capacitor(16WV 0.1μ F) [C134]
66	VCCCCZ1EH101J	AA		C	Capacitor(25WV 100PF) [C160]
67	VCCCCZ1EH101J	AA		C	Capacitor(25WV 100PF) [C161]
68	VCCCCZ1EH101J	AA		C	Capacitor(25WV 100PF) [C162]
69	VCCCCZ1EH101J	AA		C	Capacitor(25WV 100PF) [C163]
70	VCKYCZ1EB102K	AA		C	Capacitor(25WV 1000PF) [C165]
71	VCKYCZ1CF104Z	AB		C	Capacitor(16WV 0.1μ F) [C201]
72	VRS-CZ1JB103J	AA		C	Resistor(1/16W 10KΩ ± 5%) [C203]
73	VCKYCZ1CF104Z	AB		C	Capacitor(16WV 0.1μ F) [C212]
74	VCKYCZ1CF104Z	AB		C	Capacitor(16WV 0.1μ F) [C213]
75	VCKYCZ1CF104Z	AB		C	Capacitor(16WV 0.1μ F) [C214]
76	VCKYCZ1CF104Z	AB		C	Capacitor(16WV 0.1μ F) [C215]
77	VCKYCZ1CF104Z	AB		C	Capacitor(16WV 0.1μ F) [C216]
78	VCKYCZ1CF104Z	AB		C	Capacitor(16WV 0.1μ F) [C218]
79	VCKYCZ1CF104Z	AB		C	Capacitor(16WV 0.1μ F) [C219]
80	VCKYCZ1CF104Z	AB		C	Capacitor(16WV 0.1μ F) [C227]
81	VCKYCZ1CF104Z	AB		C	Capacitor(16WV 0.1μ F) [C301]
82	VCKYCZ1EB102K	AA		C	Capacitor(25WV 1000PF) [C302]
83	VCKYCY1HF104Z	AA		C	Capacitor(50WV 0.1μ F) [C304]
84	VCCCCZ1EH221J	AB		C	Capacitor(25WV 220PF) [C305]
85	VCCCCZ1EH221J	AB		C	Capacitor(25WV 220PF) [C306]

NO.	PARTS CODE	PRICE RANK	NEW MARK	PART RANK	DESCRIPTION	
[5] Control PWB unit						
86	VCCCCZ1EH221J	AB		C	Capacitor(25WV 220PF)	[C307]
87	VCKYCZ1AB104K	AC		C	Capacitor(10WV 0.1μ F)	[C308]
88	VCKYCZ1AB104K	AC		C	Capacitor(10WV 0.1μ F)	[C309]
89	VCKYCZ1CF104Z	AB		C	Capacitor(16WV 0.1μ F)	[C310]
90	VCKYCZ1CF104Z	AB		C	Capacitor(16WV 0.1μ F)	[C311]
91	VCKYCZ1EB102K	AA		C	Capacitor(25WV 1000PF)	[C312]
92	VCKYCZ1CF104Z	AB		C	Capacitor(16WV 0.1μ F)	[C313]
93	VCKYTV1AF106Z	AC		C	Capacitor(10WV 10μ F)	[C314]
94	VCKYCZ1CF104Z	AB		C	Capacitor(16WV 0.1μ F)	[C315]
95	VCKYTV1AF106Z	AC		C	Capacitor(10WV 10μ F)	[C316]
96	VCKYCZ1CF104Z	AB		C	Capacitor(16WV 0.1μ F)	[C317]
97	VCKYCZ1CF104Z	AB		C	Capacitor(16WV 0.1μ F)	[C318]
98	VCKYCZ1EB102K	AA		C	Capacitor(25WV 1000PF)	[C319]
99	VCKYCZ1CF104Z	AB		C	Capacitor(16WV 0.1μ F)	[C320]
100	VCKYCZ1CF104Z	AB		C	Capacitor(16WV 0.1μ F)	[C321]
101	VCKYCZ1CF104Z	AB		C	Capacitor(16WV 0.1μ F)	[C322]
102	VCKYTV1AF106Z	AC		C	Capacitor(10WV 10μ F)	[C323]
103	VCKYCZ1CF104Z	AB		C	Capacitor(16WV 0.1μ F)	[C324]
104	VRS-CZ1JB000J	AA		C	Resistor(1/16W 0Ω ± 5%)	[C334]
105	VCKYCZ1EB102K	AA		C	Capacitor(25WV 1000PF)	[C354]
106	VCKYCY1CB104K	AB		C	Capacitor(16WV 0.1μ F)	[C403]
107	VCCCCZ1EH221J	AB		C	Capacitor(25WV 220PF)	[C404]
108	VCCCCZ1EH221J	AB		C	Capacitor(25WV 220PF)	[C405]
109	VCCCCZ1EH221J	AB		C	Capacitor(25WV 220PF)	[C406]
110	VCCCCZ1EH221J	AB		C	Capacitor(25WV 220PF)	[C409]
111	VCKYCY1AB105K	AB		C	Capacitor(10WV 1μ F)	[C413]
112	VRS-CZ1JB202J	AD		C	Resistor(1/16W 2KΩ ± 5%)	[C414]
113	VRS-CY1JB000J	AA		C	Resistor(1/16W 0Ω ± 5%)	[C415]
114	VCKYCZ1CF104Z	AB		C	Capacitor(16WV 0.1μ F)	[C416]
115	VCCCCZ1EH221J	AB		C	Capacitor(25WV 220PF)	[C417]
116	VCKYCY1AB105K	AB		C	Capacitor(10WV 1μ F)	[C422]
117	VCKYCZ1AB104K	AC		C	Capacitor(10WV 0.1μ F)	[C423]
118	VCKYCZ1AB104K	AC		C	Capacitor(10WV 0.1μ F)	[C426]
119	VCCCCZ1EH221J	AB		C	Capacitor(25WV 220PF)	[C431]
120	VRS-CZ1JB000J	AA		C	Resistor(1/16W 0Ω ± 5%)	[C432]
121	VRS-CY1JB000J	AA		C	Resistor(1/16W 0Ω ± 5%)	[C435]
122	VCCCCZ1EH221J	AB		C	Capacitor(25WV 220PF)	[C436]
123	VCCCCZ1EH221J	AB		C	Capacitor(25WV 220PF)	[C437]
124	VCKYCZ1EB472K	AA		C	Capacitor(25WV 4700PF)	[C438]
125	VCKYCZ1EB472K	AA		C	Capacitor(25WV 4700PF)	[C439]
126	VCCCCZ1EH221J	AB		C	Capacitor(25WV 220PF)	[C441]
127	VCCCCZ1EH221J	AB		C	Capacitor(25WV 220PF)	[C442]
128	VCKYCY1AB105K	AB		C	Capacitor(10WV 1μ F)	[C443]
129	VCKYCZ1CF104Z	AB		C	Capacitor(16WV 0.1μ F)	[C444]
130	VCCCCZ1EH221J	AB		C	Capacitor(25WV 220PF)	[C445]
131	VCKYTV1AF106Z	AC		C	Capacitor(10WV 10μ F)	[C447]
132	VCCCCZ1EH221J	AB		C	Capacitor(25WV 220PF)	[C448]
133	VRS-CZ1JB000J	AA		C	Resistor(1/16W 0Ω ± 5%)	[C449]
134	VCCCCZ1EH101J	AA		C	Capacitor(25WV 100PF)	[C450]
135	VCEAGA1HW226M	AB		C	Capacitor(50WV 22μ F)	[C453]
136	VCKYCZ1EB102K	AA		C	Capacitor(25WV 1000PF)	[C462]
137	VCKYCZ1CF104Z	AB		C	Capacitor(16WV 0.1μ F)	[C463]
138	VCKYCZ1EB222K	AB		C	Capacitor(25WV 2200PF)	[C464]
139	VCKYCY1HF104Z	AA		C	Capacitor(50WV 0.1μ F)	[C467]
140	VCKYCY1AB105K	AB		C	Capacitor(10WV 1μ F)	[C504]
141	VCKYCY1AB105K	AB		C	Capacitor(10WV 1μ F)	[C505]
142	VRS-CZ1JB000J	AA		C	Resistor(1/16W 0Ω ± 5%)	[C514]
143	VCKYCZ1EB222K	AB		C	Capacitor(25WV 2200PF)	[C515]
144	VCKYCY1HF104Z	AA		C	Capacitor(50WV 0.1μ F)	[C601]
145	VCEAGA1HW226M	AB		C	Capacitor(50WV 220μ F)	[C602]
146	VCEAZA1HW227M	AG		C	Capacitor(50WV 220μ F)	[C603]
147	VCKYCY1HF104Z	AA		C	Capacitor(50WV 0.1μ F)	[C604]
148	VCKYCY1HF104Z	AA		C	Capacitor(50WV 0.1μ F)	[C606]
149	VCKYCY1HF104Z	AA		C	Capacitor(50WV 0.1μ F)	[C607]
150	VCKYCY1HF104Z	AA		C	Capacitor(50WV 0.1μ F)	[C608]
151	VCKYCY1HF104Z	AA		C	Capacitor(50WV 0.1μ F)	[C609]
152	VCKYCY1HF104Z	AA		C	Capacitor(50WV 0.1μ F)	[C610]
153	VCKYCZ1CF104Z	AB		C	Capacitor(16WV 0.1μ F)	[C611]
154	VCKYCZ1CF104Z	AB		C	Capacitor(16WV 0.1μ F)	[C612]
155	VCKYCZ0JB105K	AB		C	Capacitor(6.3WV 1μ F)	[C614]
156	VCKYCZ1CB103K	AA		C	Capacitor(16WV 0.01μ F)	[C620]
157	VCKYCZ1CB103K	AA		C	Capacitor(16WV 0.01μ F)	[C621]
158	VCKYCZ1CB103K	AA		C	Capacitor(16WV 0.01μ F)	[C622]
159	VCKYCZ1AB104K	AC		C	Capacitor(10WV 0.1μ F)	[C623]
160	VCKYCZ1CB683K	AE		C	Capacitor(16WV 0.068μ F)	[C624]
161	VCKYCY1HF104Z	AA		C	Capacitor(50WV 0.1μ F)	[C625]
162	VCEAZA1HW227M	AG		C	Capacitor(50WV 22μ F)	[C626]
163	VCKYCY1HF104Z	AA		C	Capacitor(50WV 0.1μ F)	[C627]
164	VCKYCZ1EB102K	AA		C	Capacitor(25WV 1000PF)	[C702]
165	VCKYCZ1EB102K	AA		C	Capacitor(25WV 1000PF)	[C703]
166	VCKYCZ1CF104Z	AB		C	Capacitor(16WV 0.1μ F)	[C704]
167	VCKYCZ1CF104Z	AB		C	Capacitor(16WV 0.1μ F)	[C705]
168	VCKYCZ1CF104Z	AB		C	Capacitor(16WV 0.1μ F)	[C706]
169	VCKYCZ1CF104Z	AB		C	Capacitor(16WV 0.1μ F)	[C709]
170	VCKYCZ1CF104Z	AB		C	Capacitor(16WV 0.1μ F)	[C710]

NO.	PARTS CODE	PRICE RANK	NEW MARK	PART RANK	DESCRIPTION
[5] Control PWB unit					
171	VCKYCZ1CF104Z	AB		C	Capacitor(16WV 0.1μ F) [C712]
172	VCKYCZ1CF104Z	AB		C	Capacitor(16WV 0.1μ F) [C713]
173	VCKYCZ1CF104Z	AB		C	Capacitor(16WV 0.1μ F) [C714]
174	RC-KZ3122SCZZ	AL		C	Capacitor(2KWV 1000PF) [C715]
175	VCKYCZ1CB103K	AA		C	Capacitor(16WV 0.01μ F) [C716]
176	VCCCCZ1EH180J	AA		C	Capacitor(25WV 18PF) [C717]
177	VCCCCZ1EH180J	AA		C	Capacitor(25WV 18PF) [C718]
178	VCKYCZ1CF104Z	AB		C	Capacitor(16WV 0.1μ F) [C719]
179	VCKYCZ1CF104Z	AB		C	Capacitor(16WV 0.1μ F) [C720]
180	VCKYCZ1CF104Z	AB		C	Capacitor(16WV 0.1μ F) [C721]
181	RC-KZ3122SCZZ	AL		C	Capacitor(2KWV 1000PF) [C722]
182	VCKYCZ1CF104Z	AB		C	Capacitor(16WV 0.1μ F) [C805]
183	VCKYCZ1CF104Z	AB		C	Capacitor(16WV 0.1μ F) [C820]
184	VCKYCZ1CF104Z	AB		C	Capacitor(16WV 0.1μ F) [C822]
185	VCKYCZ1CF104Z	AB		C	Capacitor(16WV 0.1μ F) [C823]
186	VCKYCZ1CF104Z	AB		C	Capacitor(16WV 0.1μ F) [C824]
187	VCKYCZ1CF104Z	AB		C	Capacitor(16WV 0.1μ F) [C825]
188	VRS-CZ1JB000J	AA		C	Resistor(1/16W 0Ω ± 5%) [C826]
189	VCKYCZ1CF104Z	AB		C	Capacitor(16WV 0.1μ F) [C827]
190	VCKYTV1AF106Z	AC		C	Capacitor(10WV 10μ F) [C828]
191	VCKYCZ1CB103K	AA		C	Capacitor(16WV 0.01μ F) [C829]
192	VCKYCY1AF105Z	AC		C	Capacitor(10WV 1μ F) [C830]
193	VCKYCY1HF104Z	AA		C	Capacitor(50WV 0.1μ F) [C906]
194	VCKYCY1HF104Z	AA		C	Capacitor(50WV 0.1μ F) [C907]
195	VCKYCY1HF104Z	AA		C	Capacitor(50WV 0.1μ F) [C915]
196	VCKYCZ1CF104Z	AB		C	Capacitor(16WV 0.1μ F) [C921]
197	VCKYCZ1CF104Z	AB		C	Capacitor(16WV 0.1μ F) [C924]
198	VCKYCY1AB105K	AB		C	Capacitor(10WV 1μ F) [C926]
199	VCKYCY1HB102K	AA		C	Capacitor(50WV 1000pF) [CA28]
200	VCKYCY1HB102K	AA		C	Capacitor(50WV 1000pF) [CA29]
201	VCKYCY1HB102K	AA		C	Capacitor(50WV 1000pF) [CA33]
202	VCKYCY1HB102K	AA		C	Capacitor(50WV 1000pF) [CA34]
203	VCCCCY1HH560J	AA		C	Capacitor(50WV 56PF) [CA35]
204	VCCCCY1HH560J	AA		C	Capacitor(50WV 56PF) [CA36]
205	VCCCCY1HH470J	AA		C	Capacitor(50WV 47PF) [CA42]
206	VCCCCY1HH470J	AA		C	Capacitor(50WV 47PF) [CA43]
207	VCCCCY1HH470J	AA		C	Capacitor(50WV 47PF) [CA44]
208	VCCCCY1HH470J	AA		C	Capacitor(50WV 47PF) [CA45]
209	VRS-CZ1JB000J	AA		C	Resistor(1/16W 0Ω ± 5%) [CA46]
210	VRS-CZ1JB000J	AA		C	Resistor(1/16W 0Ω ± 5%) [CA47]
211	VRS-CZ1JB000J	AA		C	Resistor(1/16W 0Ω ± 5%) [CA48]
212	VCCCCY1HH470J	AA		C	Capacitor(50WV 47PF) [CA49]
213	VCCCCY1HH470J	AA		C	Capacitor(50WV 47PF) [CA50]
214	VCCCCY1HH470J	AA		C	Capacitor(50WV 47PF) [CA51]
215	VCCCCY1HH470J	AA		C	Capacitor(50WV 47PF) [CA52]
216	QCNCM2666XH0G	AE		C	Connector(7pin) [CNCIS]
217	QCNCM7014SC0B	AD		C	Connector(2pin) [CNCRMT]
218	QCNCW2556SC0D	AH		C	Connector(4pin) [CNENC]
219	QCNCM7014SC0B	AD		C	Connector(2pin) [CNFDMT]
220	QJAKT2089XHZZ	AT		C	Jack(8pin) [CNLAN]
221	QCNCM2666XH1E	AF		C	Connector(15pin) [CNLIU]
222	QCNCW2556SC1i	AG		C	Connector(19pin) [CNPN]
223	QCNCW2556SC1D	AH		C	Connector(14pin) [CNPRT1]
224	QCNCW2556SC1D	AH		C	Connector(14pin) [CNPRT2]
225	QCNCM2666XH0H	AE		C	Connector(8pin) [CNPW]
226	QCNCM2666XH0D	AD		C	Connector(4pin) [CNSCANMT]
227	QCNCM2666XH0B	AD		C	Connector(2pin) [CNSP]
228	VHD1SS352F+-1	AF		B	Diode(1SS352) [D401]
229	VHDRB715F//-1	AF		B	Diode(RB715F) [D900]
230	VHD1SS352F+-1	AF		B	Diode(1SS352) [D902]
231	VHD1SS352F+-1	AF		B	Diode(1SS352) [D904]
232	VRS-CY1JB000J	AA		C	Resistor(1/16W 0Ω ± 5%) [FU600]
⚠ 233	QFS-L2016XHZZ	AD		A	IC protector(KAB5002 201) [FU900]
234	RH-iX2505XHPZ	BG		B	IC(CX93310) [IC100]
235	VHi25V016CS-1	AX		B	IC(SST25VF016B) [IC201]
236	VHiS64AH75E-1	BA		B	IC(EDS6416AHTA-75-E) [IC204]
237	VHiLV125AT+-1	AN		B	IC(SN74LV125APWR) [IC205]
238	VHiF016+TF64B	AZ	N	B	IC,FLASH ROM(16MB) (Ver.:TF64B) [IC206]
239	RH-iX2346XHZZ	AG		B	IC(HA17358AF) [IC300]
240	VHiCX20452+-1	AY		B	IC(CX20452) [IC301]
241	RH-iX2346XHZZ	AG		B	IC(HA17358AF) [IC401]
242	VHiNJM2113M-1	AG		B	IC(NJM2113M) [IC403]
243	VHiTC7PA53F-1	AG		B	IC(TC7PA53FU) [IC503]
244	VHi14D0830+-1	AU		B	IC(14D0830) [IC600]
245	VHiTC7PA04+-1	AG		B	IC(TC7PA04FU) [IC701]
246	VHiLN91C113-1	BA		B	IC(LAN91C113) [IC702]
247	VHiLVC2G14D-1	AN		B	IC(SN74LV2G14DCK) [IC703]
248	RTRNL2178SCZZ	AA		B	IC(H1260NL) [IC704]
249	VHiTC7PA53F-1	AG		B	IC(TC7PA53FU) [IC800]
250	VHiTC7PA53F-1	AG		B	IC(TC7PA53FU) [IC801]
251	VHiCX20556+-1	AU		B	IC(CX20556-11) [IC802]
252	VRS-CY1JB000J	AA		C	Resistor(1/16W 0Ω ± 5%) [L100]
253	VRS-CY1JB000J	AA		C	Resistor(1/16W 0Ω ± 5%) [L101]
254	VRS-CY1JB000J	AA		C	Resistor(1/16W 0Ω ± 5%) [L300]
255	RCiLZ2200XHZZ	AP		C	Coil(TSL1315RA-151K2R1-PF) [L600]

NO.	PARTS CODE	PRICE RANK	NEW MARK	PART RANK	DESCRIPTION
[5] Control PWB unit					
256	VRS-CY1JB000J	AA		C	Resistor(1/16W 0Ω ± 5%) [L601]
257	VRS-CZ1JB000J	AA		C	Resistor(1/16W 0Ω ± 5%) [L801]
258	VRS-CY1JB000J	AA		C	Resistor(1/16W 0Ω ± 5%) [L901]
259	VRS-TV2AB000J	AA		C	Resistor(1/10W 0Ω ± 5%) [LA01]
260	VRS-TV2AB000J	AA		C	Resistor(1/10W 0Ω ± 5%) [LA02]
261	VHPGP1S094HCZ	AG		B	Photo transistor(GP1S094HCZ) [PH900]
262	VS2SA2059++-1	AH		B	Transistor(2SA2059) [Q101]
263	VSRN1402F++-1	AF		B	Transistor(RN1402) [Q200]
264	VSRN1402F++-1	AF		B	Transistor(RN1402) [Q401]
265	VSRN1406F++-1	AF		B	Transistor(RN1406) [Q402]
266	VSRN1402F++-1	AF		B	Transistor(RN1402) [Q403]
267	VSRN1406F++-1	AF		B	Transistor(RN1406) [Q405]
268	VS2SC2412K/-1	AB		B	Transistor(2SC2412K) [Q802]
269	VRS-CZ1JB000J	AA		C	Resistor(1/16W 0Ω ± 5%) [R103]
270	VRS-CZ1JB000J	AA		C	Resistor(1/16W 0Ω ± 5%) [R104]
271	VRS-CZ1JB225J	AA		C	Resistor(1/16W 2.2MΩ ± 5%) [R105]
272	VRS-CZ1JB104J	AA		C	Resistor(1/16W 100KΩ ± 5%) [R107]
273	VRS-CZ1JB103J	AA		C	Resistor(1/16W 10KΩ ± 5%) [R110]
274	VRS-TV2AB000J	AA		C	Resistor(1/10W 0Ω ± 5%) [R112]
275	VRS-TV2AB000J	AA		C	Resistor(1/10W 0Ω ± 5%) [R113]
276	VRS-CZ1JB103J	AA		C	Resistor(1/16W 10KΩ ± 5%) [R114]
277	VRS-CZ1JB000J	AA		C	Resistor(1/16W 0Ω ± 5%) [R115]
278	VRS-CZ1JB105J	AD		C	Resistor(1/16W 1MΩ ± 5%) [R116]
279	VRS-CZ1JB122J	AA		C	Resistor(1/16W 1.2KΩ ± 5%) [R117]
280	VRS-CZ1JB000J	AA		C	Resistor(1/16W 0Ω ± 5%) [R118]
281	VRS-CZ1JB104J	AA		C	Resistor(1/16W 100KΩ ± 5%) [R119]
282	VRS-CZ1JB221J	AD		C	Resistor(1/16W 200Ω ± 5%) [R121]
283	VRSCZ1JB4991F	AG		C	Resistor(1/16W 4.99KΩ ± 1%) [R130]
284	VRS-CZ1JB101J	AA		C	Resistor(1/16W 100Ω ± 5%) [R131]
285	VRS-CZ1JB101J	AA		C	Resistor(1/16W 100Ω ± 5%) [R132]
286	VRS-CZ1JB101J	AA		C	Resistor(1/16W 100Ω ± 5%) [R133]
287	VRS-CZ1JB330J	AA		C	Resistor(1/16W 33Ω ± 5%) [R137]
288	VRS-CZ1JB104J	AA		C	Resistor(1/16W 100KΩ ± 5%) [R147]
289	VRS-CZ1JB104J	AA		C	Resistor(1/16W 100KΩ ± 5%) [R154]
290	VRS-CZ1JB103J	AA		C	Resistor(1/16W 10KΩ ± 5%) [R155]
291	VRS-CZ1JB271J	AA		C	Resistor(1/16W 270Ω ± 5%)) [R156]
292	VRS-CZ1JB471J	AA		C	Resistor(1/16W 470Ω ± 5%) [R157]
293	VRS-CZ1JB101J	AA		C	Resistor(1/16W 100Ω ± 5%) [R173]
294	VRS-CZ1JB000J	AA		C	Resistor(1/16W 0Ω ± 5%) [R177]
295	VRS-CZ1JB101J	AA		C	Resistor(1/16W 100Ω ± 5%) [R180]
296	VRS-CZ1JB104J	AA		C	Resistor(1/16W 100KΩ ± 5%) [R189]
297	VRS-CZ1JB000J	AA		C	Resistor(1/16W 0Ω ± 5%) [R191]
298	VRS-CZ1JB271J	AA		C	Resistor(1/16W 270Ω ± 5%) [R197]
299	VRS-CZ1JB103J	AA		C	Resistor(1/16W 10KΩ ± 5%) [R200]
300	VRS-CZ1JB103J	AA		C	Resistor(1/16W 10KΩ ± 5%) [R201]
301	VRS-CZ1JB103J	AA		C	Resistor(1/16W 10KΩ ± 5%) [R203]
302	VRS-CZ1JB472J	AA		C	Resistor(1/16W 4.7KΩ ± 5%) [R205]
303	VRS-CZ1JB103J	AA		C	Resistor(1/16W 10KΩ ± 5%) [R206]
304	VRS-CZ1JB103J	AA		C	Resistor(1/16W 10KΩ ± 5%) [R208]
305	VRS-CZ1JB103J	AA		C	Resistor(1/16W 10KΩ ± 5%) [R219]
306	VRS-CZ1JB000J	AA		C	Resistor(1/16W 0Ω ± 5%) [R222]
307	VRS-CZ1JB000J	AA		C	Resistor(1/16W 0Ω ± 5%) [R224]
308	VRS-CZ1JB000J	AA		C	Resistor(1/16W 0Ω ± 5%) [R226]
309	VRS-CZ1JB133J	AC		C	Resistor(1/16W 13KΩ ± 5%) [R301]
310	VRS-CZ1JB332J	AA		C	Resistor(1/16W 3.3KΩ ± 5%) [R302]
311	VRS-CZ1JB133J	AC		C	Resistor(1/16W 13KΩ ± 5%) [R303]
312	VRS-CZ1JB103J	AA		C	Resistor(1/16W 10KΩ ± 5%) [R305]
313	VRS-CZ1JB103J	AA		C	Resistor(1/16W 10KΩ ± 5%) [R306]
314	VRS-CZ1JB000J	AA		C	Resistor(1/16W 0Ω ± 5%) [R310]
315	VRS-CZ1JB103J	AA		C	Resistor(1/16W 10KΩ ± 5%) [R312]
316	VRS-CZ1JB104J	AA		C	Resistor(1/16W 100KΩ ± 5%) [R313]
317	VRS-CZ1JB000J	AA		C	Resistor(1/16W 0Ω ± 5%) [R316]
318	VRS-CZ1JB393J	AD		C	Resistor(1/16W 39KΩ ± 5%) [R401]
319	VRS-CZ1JB103J	AA		C	Resistor(1/16W 10KΩ ± 5%) [R402]
320	VRS-CZ1JB332J	AA		C	Resistor(1/16W 3.3KΩ ± 5%) [R403]
321	VRS-CZ1JB202J	AD		C	Resistor(1/16W 2KΩ ± 5%) [R406]
322	VRS-CZ1JB473J	AA		C	Resistor(1/16W 47KΩ ± 5%) [R407]
323	VRS-CZ1JB472J	AA		C	Resistor(1/16W 4.7KΩ ± 5%) [R410]
324	VRS-CZ1JB000J	AA		C	Resistor(1/16W 0Ω ± 5%) [R411]
325	VRS-CZ1JB000J	AA		C	Resistor(1/16W 0Ω ± 5%) [R415]
326	VRS-CZ1JB203J	AD		C	Resistor(1/16W 20KΩ ± 5%) [R416]
327	VRS-CZ1JB102J	AA		C	Resistor(1/16W 1KΩ ± 5%) [R417]
328	VRS-CZ1JB183J	AD		C	Resistor(1/16W 18KΩ ± 5%) [R418]
329	VRS-CZ1JB164J	AD		C	Resistor(1/16W 160KΩ ± 5%) [R419]
330	VRS-CZ1JB000J	AA		C	Resistor(1/16W 0Ω ± 5%) [R428]
331	VRS-CZ1JB104J	AA		C	Resistor(1/16W 100KΩ ± 5%) [R429]
332	VRS-CZ1JB224J	AA		C	Resistor(1/16W 220KΩ ± 5%) [R430]
333	VRS-CZ1JB332J	AA		C	Resistor(1/16W 3.3KΩ ± 5%) [R431]
334	VRS-CZ1JB224J	AA		C	Resistor(1/16W 220KΩ ± 5%) [R432]
335	VRS-CZ1JB102J	AA		C	Resistor(1/16W 1KΩ ± 5%) [R433]
336	VRS-CZ1JB823J	AD		C	Resistor(1/16W 82KΩ ± 5%) [R434]
337	VRS-CZ1JB472J	AA		C	Resistor(1/16W 4.7KΩ ± 5%) [R435]
338	VRS-CZ1JB912F	AG		C	Resistor(1/16W 9.1KΩ ± 1%) [R445]
339	VRS-CZ1JB000J	AA		C	Resistor(1/16W 0Ω ± 5%) [R501]
340	VRS-CZ1JB332J	AA		C	Resistor(1/16W 3.3KΩ ± 5%) [R515]

NO.	PARTS CODE	PRICE RANK	NEW MARK	PART RANK	DESCRIPTION	
[5] Control PWB unit						
341	VRS-CZ1JB303J	AD		C	Resistor(1/16W 30KΩ ± 5%)	[R516]
342	VRS-CZ1JB000J	AA		C	Resistor(1/16W 0Ω ± 5%)	[R519]
343	VRS-CZ1JB000J	AA		C	Resistor(1/16W 0Ω ± 5%)	[R521]
344	VRS-CZ1JB000J	AA		C	Resistor(1/16W 0Ω ± 5%)	[R522]
345	VRS-CZ1JB000J	AA		C	Resistor(1/16W 0Ω ± 5%)	[R523]
346	VRS-CZ1JB000J	AA		C	Resistor(1/16W 0Ω ± 5%)	[R527]
347	VRS-CZ1JB620J	AA		C	Resistor(1/16W 62Ω ± 5%)	[R600]
348	VRS-CZ1JB152J	AA		C	Resistor(1/16W 1.5KΩ ± 5%)	[R601]
349	VRS-CZ1JB103J	AA		C	Resistor(1/16W 10KΩ ± 5%)	[R602]
350	VRS-CZ1JB103J	AA		C	Resistor(1/16W 10KΩ ± 5%)	[R604]
351	VRS-CZ1JB562J	AA		C	Resistor(1/16W 5.6KΩ ± 5%)	[R605]
352	VRS-HT3AA1R3J	AE		C	Resistor(1W 1.3Ω ± 5%)	[R606]
353	VRS-HT3AA1R3J	AE		C	Resistor(1W 1.3Ω ± 5%)	[R607]
354	VRS-CZ1JB152J	AA		C	Resistor(1/16W 1.5KΩ ± 5%)	[R608]
355	VRS-CZ1JB363F	AG		C	Resistor(1/16W 36KΩ ± 1%)	[R609]
356	VRSCZ1JB5490F	AG		C	Resistor(1/16W 549Ω ± 1%)	[R610]
357	VRSCZ1JB3650F	AG		C	Resistor(1/16W 365Ω ± 1%)	[R611]
358	VRS-CZ1JB103J	AA		C	Resistor(1/16W 10KΩ ± 5%)	[R613]
359	VRS-CZ1JB124F	AD		C	Resistor(1/16W 120KΩ ± 1%)	[R614]
360	VRS-CZ1JB363F	AG		C	Resistor(1/16W 36KΩ ± 1%)	[R615]
361	VRS-CZ1JB124F	AD		C	Resistor(1/16W 120KΩ ± 1%)	[R616]
362	VRS-CZ1JB103J	AA		C	Resistor(1/16W 10KΩ ± 5%)	[R618]
363	VRSCZ1JB5490F	AG		C	Resistor(1/16W 549Ω ± 1%)	[R619]
364	VRS-CZ1JB103J	AA		C	Resistor(1/16W 10KΩ ± 5%)	[R623]
365	VRSCZ1JB6041F	AG		C	Resistor(1/16W 6.04KΩ ± 1%)	[R626]
366	VRS-CZ1JB104J	AA		C	Resistor(1/16W 100KΩ ± 5%)	[R627]
367	VRSCZ1JB7321F	AG		C	Resistor(1/16W 7.32KΩ ± 1%)	[R628]
368	VRS-CZ1JB222F	AG		C	Resistor(1/16W 2.2KΩ ± 1%)	[R629]
369	VRS-CY1JB000J	AA		C	Resistor(1/16W 0Ω ± 5%)	[R631]
370	VRS-CY1JB000J	AA		C	Resistor(1/16W 0Ω ± 5%)	[R633]
371	VRS-CZ1JB103J	AA		C	Resistor(1/16W 10KΩ ± 5%)	[R634]
372	VRS-CZ1JB103J	AA		C	Resistor(1/16W 10KΩ ± 5%)	[R635]
373	VRSCZ1JB4991F	AG		C	Resistor(1/16W 4.99KΩ ± 1%)	[R636]
374	VRSCZ1JB4991F	AG		C	Resistor(1/16W 4.99KΩ ± 1%)	[R637]
375	VRS-CZ1JB103J	AA		C	Resistor(1/16W 10KΩ ± 5%)	[R638]
376	VRS-CZ1JB330J	AA		C	Resistor(1/16W 33Ω ± 5%)	[R700]
377	VRS-CZ1JB000J	AA		C	Resistor(1/16W 0Ω ± 5%)	[R701]
378	VRS-CZ1JB471J	AA		C	Resistor(1/16W 470Ω ± 5%)	[R702]
379	VRS-TV2AB103J	AA		C	Resistor(1/10W 10KΩ ± 5%)	[R703]
380	VRS-TV2AB103J	AA		C	Resistor(1/10W 10KΩ ± 5%)	[R704]
381	VRS-CZ1JB103J	AA		C	Resistor(1/16W 10KΩ ± 5%)	[R705]
382	VRS-CZ1JB103J	AA		C	Resistor(1/16W 10KΩ ± 5%)	[R707]
383	VRS-CZ1JB221J	AD		C	Resistor(1/16W 200Ω ± 5%)	[R710]
384	VRS-TV2AB000J	AA		C	Resistor(1/10W 0Ω ± 5%)	[R711]
385	VRSCY1JB75R0F	AD		C	Resistor(1/16W 75Ω ± 1%)	[R712]
386	VRSCY1JB75R0F	AD		C	Resistor(1/16W 75Ω ± 1%)	[R713]
387	RR-SZ3047SCZZ	AA		C	Resistor(24.9Ω ± 1%)	[R716]
388	RR-SZ3047SCZZ	AA		C	Resistor(24.9Ω ± 1%)	[R717]
389	RR-SZ3047SCZZ	AA		C	Resistor(24.9Ω ± 1%)	[R718]
390	RR-SZ3047SCZZ	AA		C	Resistor(24.9Ω ± 1%)	[R719]
391	RR-SZ3048SCZZ	AA		C	Resistor(49.9Ω ± 1%)	[R720]
392	RR-SZ3048SCZZ	AA		C	Resistor(49.9Ω ± 1%)	[R721]
393	VRS-CZ1JB105J	AD		C	Resistor(1/16W 1MΩ ± 5%)	[R722]
394	VRS-CZ1JB681J	AC		C	Resistor(1/16W 680Ω ± 5%)	[R723]
395	VRS-CZ1JB470J	AA		C	Resistor(1/16W 47Ω ± 5%)	[R724]
396	VRS-TV2AB113F	AA		C	Resistor(1/10W 11KΩ ± 1%)	[R725]
397	VRSCY1JB49R9F	AG		C	Resistor(1/16W 49.9Ω ± 1%)	[R730]
398	VRSCY1JB49R9F	AG		C	Resistor(1/16W 49.9Ω ± 1%)	[R731]
399	VRSCY1JB49R9F	AG		C	Resistor(1/16W 49.9Ω ± 1%)	[R732]
400	VRSCY1JB49R9F	AG		C	Resistor(1/16W 49.9Ω ± 1%)	[R733]
401	VRSCY1JB49R9F	AG		C	Resistor(1/16W 49.9Ω ± 1%)	[R734]
402	VRSCY1JB49R9F	AG		C	Resistor(1/16W 49.9Ω ± 1%)	[R735]
403	VRS-CZ1JB103J	AA		C	Resistor(1/16W 10KΩ ± 5%)	[R738]
404	VRS-CZ1JB103J	AA		C	Resistor(1/16W 10KΩ ± 5%)	[R739]
405	VRS-CZ1JB103J	AA		C	Resistor(1/16W 10KΩ ± 5%)	[R740]
406	VRS-CZ1JB221J	AD		C	Resistor(1/16W 200Ω ± 5%)	[R741]
407	VRS-HT3DA221J	AB		C	Resistor(2W 220Ω ± 5%)	[R800]
408	VRS-CZ1JB102J	AA		C	Resistor(1/16W 1KΩ ± 5%)	[R821]
409	VRS-CZ1JB103J	AA		C	Resistor(1/16W 10KΩ ± 5%)	[R822]
410	VRS-CY1JB000J	AA		C	Resistor(1/16W 0Ω ± 5%)	[R825]
411	VRS-CY1JB000J	AA		C	Resistor(1/16W 0Ω ± 5%)	[R826]
412	VRS-CZ1JB100J	AA		C	Resistor(1/16W 10Ω ± 5%)	[R841]
413	VRS-CZ1JB000J	AA		C	Resistor(1/16W 0Ω ± 5%)	[R844]
414	VRS-CZ1JB000J	AA		C	Resistor(1/16W 0Ω ± 5%)	[R848]
415	VRS-CY1JB000J	AA		C	Resistor(1/16W 0Ω ± 5%)	[R849]
416	VRS-CZ1JB562J	AA		C	Resistor(1/16W 5.6KΩ ± 5%)	[R900]
417	VRS-CZ1JB104J	AA		C	Resistor(1/16W 100KΩ ± 5%)	[R902]
418	VRS-CZ1JB000J	AA		C	Resistor(1/16W 0Ω ± 5%)	[R903]
419	VRS-TV2AB221J	AA		C	Resistor(1/10W 220Ω ± 5%)	[R905]
420	VRS-CZ1JB000J	AA		C	Resistor(1/16W 0Ω ± 5%)	[R911]
421	VRS-CZ1JB000J	AA		C	Resistor(1/16W 0Ω ± 5%)	[R913]
422	VRS-HT3DA110J	AE		C	Resistor(2W 11Ω ± 5%)	[R916]
423	VRS-CZ1JB271J	AA		C	Resistor(1/16W 270Ω ± 5%)	[RA00]
424	VRS-CZ1JB271J	AA		C	Resistor(1/16W 270Ω ± 5%)	[RA01]
425	VRS-CZ1JB000J	AA		C	Resistor(1/16W 0Ω ± 5%)	[RA07]

NO.	PARTS CODE	PRICE RANK	NEW MARK	PART RANK	DESCRIPTION	
[5] Control PWB unit						
426	VRS-CZ1JB103J	AA		C	Resistor(1/16W 10KΩ ± 5%)	[RA08]
427	VRS-CZ1JB000J	AA		C	Resistor(1/16W 0Ω ± 5%)	[RA12]
428	VRS-CZ1JB271J	AA		C	Resistor(1/16W 270Ω ± 5%)	[RA15]
429	VRS-CZ1JB104J	AA		C	Resistor(1/16W 100KΩ ± 5%)	[RA16]
430	VRS-CZ1JB104J	AA		C	Resistor(1/16W 100KΩ ± 5%)	[RA17]
431	VRS-CZ1JB104J	AA		C	Resistor(1/16W 100KΩ ± 5%)	[RA18]
432	VRS-CZ1JB000J	AA		C	Resistor(1/16W 0Ω ± 5%)	[RA19]
433	VRS-CZ1JB000J	AA		C	Resistor(1/16W 0Ω ± 5%)	[RA20]
434	VHiLD111733-1	AN		B	IC(LD1117AL-33-TN3-A-R)	[REG900]
435	VHiBA178M24-1	AL		B	IC(BA178M24FP-E2)	[REG901]
436	VHHTBPS333H-1	AF		B	Thermistor(33KΩ)	[THERM2]
437	RCRSP2236XHZZ	AK		B	Crystal(12MHz)	[X1]
438	RCRSA2233XHPZ	AG		B	Crystal(32.768kHz)	[X2]
439	RCRSP2237XHZZ	AK		B	Crystal(25MHz)	[X3]
440	VHDB340A+++-1	AH		B	Diode(B340A)	[ZD600]
441	VHEPTZ12B++-1	AG		B	Zener diode(PTZ12B)	[ZD601]
	(Unit)					
901	DCEKC481XXHS1	BW	N	E	Control PWB unit (within ROM)	
[6] LIU PWB unit						
⚠ 1	VHVDSS301L/-U	AF		B	Varistor(DSS-301L)	[AR1]
⚠ 2	VHVRA501PC6-1	AG		B	Varistor(RA501P-C6)	[AR2]
⚠ 3	VHVRA501PC6-1	AG		B	Varistor(RA501P-C6)	[AR3]
4	QCNWN205CXHZZ	AF		C	ARG earth cable	[ARG]
5	VCEAGA1HW106M	AA		C	Capacitor(50WV 10μ F)	[C1]
6	RC-FZ3079SCZZ	AG		C	Capacitor(250WV 1μ F)	[C4]
7	RC-FZ3078SCZZ	AF		C	Capacitor(250WV 0.56μ F)	[C5]
8	VCEAGA1HW226M	AB		C	Capacitor(50WV 22μ F)	[C7]
9	VCEAGA1HW107M	AA		C	Capacitor(50WV 100μ F)	[C8]
10	VCEAGA1CW476M	AB		C	Capacitor(16WV 47μ F)	[C9]
11	VCEAGA1HW106M	AA		C	Capacitor(50WV 10μ F)	[C10]
12	VCFYDA1HA334J	AC		C	Capacitor(50WV 0.33μ F)	[C13]
13	VCEAGA1HW107M	AA		C	Capacitor(50WV 100μ F)	[C15]
14	VCEAEA1CW226M	AA		C	Capacitor(16WV 22μ F)	[C16]
15	VCEAEA1EW475M	AA		C	Capacitor(25WV 4.7μ F)	[C17]
16	VCKYCY1HF104Z	AA		C	Capacitor(50WV 0.1μ F)	[C101]
17	VCKYCY1HB563K	AC		C	Capacitor(50WV 0.056μ F)	[C102]
18	VRS-CY1JB000J	AA		C	Resistor(1/16W 0Ω ± 5%)	[C105]
19	VCKYCY1CB104K	AB		C	Capacitor(16WV 0.1μ F)	[C106]
20	VRS-CY1JB000J	AA		C	Resistor(1/16W 0Ω ± 5%)	[C107]
21	VCKYCY1HB183K	AB		C	Capacitor(50WV 0.018μ F)	[C108]
22	VCKYCY1HB102K	AA		C	Capacitor(50WV 1000PF)	[C109]
23	VCKYCY1HB102K	AA		C	Capacitor(50WV 1000PF)	[C110]
24	VCKYCY1HF104Z	AA		C	Capacitor(50WV 0.1μ F)	[C111]
25	VCKYCY1HB152K	AB		C	Capacitor(50WV 1500PF)	[C113]
26	VCCCCY1HH221J	AA		C	Capacitor(50WV 220PF)	[C114]
27	VCKYCY1HB102K	AA		C	Capacitor(50WV 1000PF)	[C115]
28	VCKYCY1CB104K	AB		C	Capacitor(16WV 0.1μ F)	[C116]
29	VCKYCY1HB223K	AC		C	Capacitor(50WV 0.022μ F)	[C118]
30	VCKYCY1HB683K	AC		C	Capacitor(50WV 0.068μ F)	[C119]
31	VCKYCY1CB104K	AB		C	Capacitor(16WV 0.1μ F)	[C122]
32	VCCCCY1HH680J	AA		C	Capacitor(50WV 68PF)	[C123]
33	VCKYCY1HB102K	AA		C	Capacitor(50WV 1000PF)	[C124]
34	VCKYCY1HB821K	AA		C	Capacitor(50WV 820PF)	[C125]
35	VCKYCY1CB104K	AB		C	Capacitor(16WV 0.1μ F)	[C126]
36	VCKYCY1HB103K	AA		C	Capacitor(50WV 0.01μ F)	[C132]
37	VCKYCY1CB104K	AB		C	Capacitor(16WV 0.1μ F)	[C134]
38	VCKYCY1HB222K	AA		C	Capacitor(50WV 2200PF)	[C135]
39	VCKYCY1HB222K	AA		C	Capacitor(50WV 2200PF)	[C136]
40	VCKYCY1CB104K	AB		C	Capacitor(16WV 0.1μ F)	[C143]
⚠ 41	RRLYD3434XHZZ	AP		B	Relay(OUAZ-SH-124DZ)	[CML1]
42	QJAKZ2079XH0D	AD		C	Jack	[CNHJ]
43	QCNCM2666XH1E	AF		C	Connector(15pin)	[CNLIU]
44	QJAKZ2087XH0D	AE		C	Jack	[CNLNJ]
45	QJAKZ2087XH0B	AD		C	Jack	[CNTLJ]
46	VHD1N4148//-1	AA		B	Diode(1N4148)	[D1]
47	VHD1N4148//-1	AA		B	Diode(1N4148)	[D2]
48	VHD1SS355//-1	AB		B	Diode(1SS355)	[D101]
49	QCNWN205CXHZZ	AF		C	FG earth cable	[FG]
50	RH-iX2383XHZZ	AG		B	IC(LM2902NS)	[IC101]
⚠ 51	RFiLN2027XHZZ	AC		C	Coil(R-5C)	[L1]
⚠ 52	RFiLN2027XHZZ	AC		C	Coil(R-5C)	[L2]
53	RCiLF2125SCZZ	AF		C	Coil(4.7mH)	[L5]
⚠ 54	RFiLN2027XHZZ	AC		C	Coil(R-5C)	[L6]
⚠ 55	RFiLN2027XHZZ	AC		C	Coil(R-5C)	[L7]
56	VHPPS2535-1//	AH		B	Photo transistor(PS2535-1)	[PC2]
57	VHPPS2561L-1/	AG		B	Photo transistor(PS2561L-1)	[PC3]
58	VHPSG206S//-1	AG		B	Photo transistor(SG206S)	[PH1]
59	VSBS108////-1	AE		B	FET(BS108)	[Q1]
60	VSKTC3198GR-1	AD		B	Transistor(KTC3198GR)	[Q2]
61	VSRN1406F++-1	AF		B	Transistor(RN1406)	[Q101]
62	VSRN1406F++-1	AF		B	Transistor(RN1406)	[Q102]
63	VSRN1406F++-1	AF		B	Transistor(RN1406)	[Q104]
64	VSRN1406F++-1	AF		B	Transistor(RN1406)	[Q105]

NO.	PARTS CODE	PRICE RANK	NEW MARK	PART RANK	DESCRIPTION	
[6] LIU PWB unit						
65	VSRN2402F++-1	AF		B	Transistor(RN2402)	[Q103]
66	VRD-HT2EY150J	AA		C	Resistor(1/4W 15Ω ± 5%)	[R1]
67	VRD-HT2EY103J	AA		C	Resistor(1/4W 10KΩ ± 5%)	[R2]
68	VRD-HT2EY150J	AA		C	Resistor(1/4W 15Ω ± 5%)	[R3]
69	VRD-HT2EY221J	AA		C	Resistor(1/4W 220Ω ± 5%)	[R4]
70	VRD-HT2EY433J	AA		C	Resistor(1/4W 43KΩ ± 5%)	[R6]
71	VRD-HT2EY101J	AA		C	Resistor(1/4W 100Ω ± 5%)	[R10]
72	VRD-HT2EY101J	AA		C	Resistor(1/4W 100Ω ± 5%)	[R11]
73	VRD-HT2EY151J	AA		C	Resistor(1/4W 150Ω ± 5%)	[R12]
74	VRD-HT2HY223J	AA		C	Resistor(1/2W 22KΩ ± 5%)	[R14]
75	VRS-RE2HA101J	AB		C	Resistor(1/2W 100Ω ± 5%)	[R16]
76	VRS-TS2AD153J	AA		C	Resistor(1/10W 15KΩ ± 5%)	[R101]
77	VRS-TS2AD000J	AA		C	Resistor(1/10W 0Ω ± 5%)	[R102]
78	VRS-TS2AD471J	AA		C	Resistor(1/10W 470Ω ± 5%)	[R104]
79	VRS-CY1JB392J	AA		C	Resistor(1/16W 3.9KΩ ± 5%)	[R105]
80	VRS-CY1JB271J	AA		C	Resistor(1/16W 270Ω ± 5%)	[R106]
81	VRS-CY1JB621J	AA		C	Resistor(1/16W 620Ω ± 5%)	[R108]
82	VRS-CY1JB162J	AA		C	Resistor(1/16W 1.6KΩ ± 5%)	[R109]
83	VRS-CY1JB223J	AA		C	Resistor(1/16W 22KΩ ± 5%)	[R110]
84	VRS-CY1JB223J	AA		C	Resistor(1/16W 22KΩ ± 5%)	[R111]
85	VRS-CY1JB333J	AA		C	Resistor(1/16W 33KΩ ± 5%)	[R112]
86	VRS-CY1JB333J	AA		C	Resistor(1/16W 33KΩ ± 5%)	[R113]
87	VRS-CY1JB332J	AA		C	Resistor(1/16W 3.3KΩ ± 5%)	[R114]
88	VCKYCY1AB105K	AB		C	Capacitor(10WV 1μ F)	[R115]
89	VRS-CY1JB332J	AA		C	Resistor(1/16W 3.3KΩ ± 5%)	[R116]
90	VRS-CY1JB203J	AA		C	Resistor(1/16W 20KΩ ± 5%)	[R117]
91	VRS-CY1JB102J	AA		C	Resistor(1/16W 1KΩ ± 5%)	[R118]
92	VRS-CY1JB103J	AA		C	Resistor(1/16W 10KΩ ± 5%)	[R119]
93	VRS-CY1JB102J	AA		C	Resistor(1/16W 1KΩ ± 5%)	[R120]
94	VRS-CY1JB103J	AA		C	Resistor(1/16W 10KΩ ± 5%)	[R121]
95	VRS-CY1JB154J	AA		C	Resistor(1/16W 150KΩ ± 5%)	[R122]
96	VRS-CY1JB000J	AA		C	Resistor(1/16W 0Ω ± 5%)	[R123]
97	VRS-CY1JB224J	AA		C	Resistor(1/16W 220KΩ ± 5%)	[R125]
98	VRS-CY1JB102J	AA		C	Resistor(1/16W 1KΩ ± 5%)	[R126]
99	VRS-CY1JB113J	AA		C	Resistor(1/16W 11KΩ ± 5%)	[R127]
100	VRS-CY1JB822J	AA		C	Resistor(1/16W 8.2KΩ ± 5%)	[R128]
101	VRS-CY1JB154J	AA		C	Resistor(1/16W 150KΩ ± 5%)	[R129]
102	VRS-CY1JB332J	AA		C	Resistor(1/16W 3.3KΩ ± 5%)	[R130]
103	VRS-CY1JB913J	AA		C	Resistor(1/16W 91KΩ ± 5%)	[R131]
104	VRS-CY1JB222J	AA		C	Resistor(1/16W 2.2KΩ ± 5%)	[R132]
105	VRS-CY1JB152J	AA		C	Resistor(1/16W 1.5KΩ ± 5%)	[R133]
106	VRS-CY1JB102J	AA		C	Resistor(1/16W 1KΩ ± 5%)	[R134]
107	VRS-TS2AD301J	AA		C	Resistor(1/10W 300Ω ± 5%)	[R135]
108	RH-DX2007SCZZ	AC		B	Diode bridge(S1ZB60)	[REC1]
109	VHiKiA78L05BP	AF		B	IC(KIA78L05BP)	[REG1]
⚠ 110	RTRNi2165XHZZ	AG		B	Transformer(I2165)	[T1]
111	VHVTN07G101-1	AB		B	Varistor(TNR7V101K)	[VA1]
112	VHEMTZJ6R8B-1	AC		B	Zener diode(MTZJ6.8B)	[ZD1]
113	VHEHZ2A1///-1	AC		B	Zener diode(HZ2A1)	[ZD2]
114	VHEHZ2A1///-1	AC		B	Zener diode(HZ2A1)	[ZD3]
115	VHEMTZJ100B-1	AC		B	Zener diode(MTZJ10B)	[ZD4]
116	VHEMTZJ300B-1	AA		B	Zener diode(MTZJ30B)	[ZD5]
117	VHEMTZJ200B-1	AC		B	Zener diode(MTZJ20B)	[ZD7]
	(Unit)					
901	DCEKL259DXH14	BE	N	E	LIU PWB unit	
[7] Power supply PWB unit						
1	0KYL5051AQ001	AE		C	Ferrite beads(BL02RN1)	[BEA1]
2	0KYL5051AQ001	AE		C	Ferrite beads(BL02RN1)	[BEA101]
3	0KYC2131QS104	AG		C	Capacitor(275WV 0.1μ F)	[C1]
4	0KYC3138MS390	AU		C	Electrolytic Capacitor(400WV 39μ F)	[C5]
5	0KYC1384QS472	AG		C	Capacitor(4700PF)	[C6]
6	0KYC1384QS472	AG		C	Capacitor(4700PF)	[C7]
7	0KYC10B2SQ470	AG		C	Capacitor(2KWV 47PF)	[C8]
8	0KYC1102EC472	AC		C	Capacitor(50WV 4700PF)	[C9]
9	0KYC1102CC333	AC		C	Capacitor(25WV 0.033μ F)	[C10]
10	0KYC1131EC101	AC		C	Capacitor(50WV 100PF)	[C11]
11	0KYC30A0EQ101	AH		C	Electrolytic Capacitor(100WV 50μ F)	[C101]
12	0KYC30A0BQ471	AL		C	Electrolytic Capacitor(16WV 470μ F)	[C102]
13	0KYC1132BC104	AC		C	Capacitor(16WV 0.1μ F)	[C110]
14	0KYK2051AQ002	AG		C	Connector(3pin)	[CNAC]
15	0KYK2148LS002	AG		C	Connector(8pin)	[CNPW]
16	0KYD2051AQ002	AD		B	Diode(1SS133)	[D3]
17	0KYD2051AQ002	AD		B	Diode(1SS133)	[D4]
18	0KYD4055AQ022	AD		B	Zener diode(MTZJ9.1)	[D5]
19	0KYD2051AQ002	AD		B	Diode(1SS133)	[D6]
20	0KYD2051AQ002	AD		B	Diode(1SS133)	[D7]
21	0KYD4055AQ065	AE		B	Zener diode(MTZJ30)	[D8]
22	0KYD1057AQ006	AF		B	Diode(ERA15-06)	[D10]
23	0KYD1057AQ006	AF		B	Diode(ERA15-06)	[D11]
24	0KYD1057AQ006	AF		B	Diode(ERA15-06)	[D12]
25	0KYD1057AQ006	AF		B	Diode(ERA15-06)	[D13]
26	0KYD2049BQ202	AQ		B	Diode(ERC91-02)	[D101]
27	0KYD20Q0AQ003	AL		B	Diode(EC31QS03L)	[D102]
28	0KYD4145AA006	AK		B	Zener diode(TZP36)	[D104]

NO.	PARTS CODE	PRICE RANK	NEW MARK	PART RANK	DESCRIPTION	
[7] Power supply PWB unit						
29	0KYK7135AS003	AM		A	Fuse(T2.5A/250V)	[F1]
30	0KYK7135AS003	AM		A	Fuse(T2.5A/250V)	[F2]
31	0KY0MPS902200	AF		C	Heat sink	[HS1]
32	0KYH2211AR001	AL		B	IC(NJM1431AL2)	[IC101]
33	0KYL1173JL553	AS		C	Coil(SS11VL-03550)	[L1]
34	0KYW0000AQ005	AC		C	Jumper wire(5mm)	[NTC1]
35	0KYW0000AQ012	AC		C	Jumper wire(12.5mm)	[P101]
36	0KYH7152AS001	AL		B	Optical isolater(PS2581)	[PC1]
37	0KYT2718KL001	AV		B	FET(2SK2718)	[Q1]
38	0KYT4097CC002	AG		B	Transistor(2SC4097)	[Q2]
39	0KYR3133AC225	AC		C	Resistor(1/4W 2.2MΩ)	[R1]
40	0KYR3126TC394	AC		C	Resistor(1/8W 390KΩ)	[R2]
41	0KYR3126TC394	AC		C	Resistor(1/8W 390KΩ)	[R3]
42	0KYR3126TC394	AC		C	Resistor(1/8W 390KΩ)	[R4]
43	0KYR3114VC183	AC		C	Resistor(1/10W 18KΩ)	[R5]
44	0KYR3121TC222	AC		C	Resistor(1/8W 2.2KΩ)	[R6]
45	0KYR3111VC182	AC		C	Resistor(1/10W 1.8KΩ)	[R7]
46	0KYR3111VC333	AB		C	Resistor(1/10W 33KΩ)	[R8]
47	0KYR3121TC101	AB		C	Resistor(1/8W 100Ω)	[R9]
48	0KYR3111VC682	AB		C	Resistor(1/10W 6.8KΩ)	[R10]
49	0KYR3114VC103	AC		C	Resistor(1/10W 10KΩ)	[R11]
50	0KYR3111VC223	AB		C	Resistor(1/10W 22KΩ)	[R12]
51	0KYR3111VC221	AC		C	Resistor(1/10W 220Ω)	[R13]
52	0KYR3121TC681	AB		C	Resistor(1/8W 680Ω)	[R17]
53	0KYR1053UQ470	AC		C	Resistor(1/4W 47Ω)	[R19]
54	0KYR3133AC225	AC		C	Resistor(1/4W 2.2MΩ)	[R41]
55	0KYR1053UQ562	AC		C	Resistor(1/4W 5.6KΩ)	[R103]
56	0KYR1053UQ562	AC		C	Resistor(1/4W 5.6KΩ)	[R104]
57	0KYR1053UQ562	AC		C	Resistor(1/4W 5.6KΩ)	[R107]
58	0KYR3121TC101	AB		C	Resistor(1/8W 100Ω)	[R110]
59	0KYR3111VC272	AC		C	Resistor(1/10W 2.7KΩ)	[R111]
60	0KYR3111VC472	AC		C	Resistor(1/10W 4.7KΩ)	[R112]
61	0KYR3114VC562	AC		C	Resistor(1/10W 5.6KΩ)	[R113]
62	0KYR3114VC562	AC		C	Resistor(1/10W 5.6KΩ)	[R115]
63	0KYL2100DS010	BA		B	Transformer(10D1)	[T1]
64	0KYR8054EQ102	AG		C	Variable resistor(1/10W 1KΩ)	[VR101]
65	0KYD7114AR005	AG		B	Transinent voltage surge suppressor(ENE471)	[Z1]
	(Unit)					
⚠ 901	RDENT2228XHZZ	BF		E	Power supply PWB unit	
[8] Operation panel PWB unit						
1	VHPSG206S//-1	AG		B	Photo transistor(SG206S)	[PH1]
2	VHPSG206S//-1	AG		B	Photo transistor(SG206S)	[PH2]
3	VHPSG206S//-1	AG		B	Photo transistor(SG206S)	[PH3]
	(Unit)					
901	DCEKP343DXH01	AU		E	Operation panel PWB unit	

■INDEX

PARTS CODE	No.	PRICE RANK	NEW MARK	PART RANK
【 C 】				
CCNWN495CXH01	1-28	AP		C
CFRM-2277XH01	1-45	BD		C
CFRM-2278XH01	1-8	BD		C
CPAKC439HXH01	4-11	BA	N	D
CPLTP3434XH01	4-7	BB		C
CRŌLP2499XH01	1-29	AM		C
CRŌLR2362AX01	1-18	AN		C
CRŌLR2548XH01	1-27	AT		C
【 D 】				
DCEKC481XXHS1	1-52	BW	N	E
〃	5-901	BW	N	E
DCEKL259DXH14	1-30	BE	N	E
〃	6-901	BE	N	E
DCEKP341DXH07	2-901	BQ	N	E
DCEKP343DXH01	2-9	AU		E
〃	8-901	AU		E
DUNTK245DXHPW	4-12	AX		E
DUNTM342DXH01	1-53	BR		E
【 G 】				
GCABB2468XHSB	1-31	BC		D
GCASP2197XHSA	2-1	BA		D
GCASP2198XHSA	2-2	BA		D
GCŌVA2538XHSA	1-68	BC		C
GCŌVA2539XHSA	1-69	BC		C
GCŌVA2540XHSA	1-1	BC		C
GLEGG2078XHZZ	1-32	AD		C
【 H 】				
HPNLH2458XHSD	2-37	AP		D
【 J 】				
JBTN-2537XHSA	2-3	AS		C
JBTN-2538XHSA	2-4	AS		C
JBTN-2539XHSA	2-5	AS		C
JBTN-2541XHSA	2-6	AS		C
JBTN-2542XHSC	2-7	AS		C
JBTN-2544XHSA	2-8	AS		C
【 L 】				
LBNDJ2006XHZZ	1-56	AA		C
LBSHP2169XHZZ	1-5	AF		C
LFRM-2277XHZZ	1-46	AT		C
LFRM-2278XHZZ	1-9	AT		C
LHLDZ2322XHZZ	1-64	AK		C
LHLDZ2323XHZZ	1-65	AK		C
LPLTG3429XHZZ	2-18	AF		C
LPLTM2924XHFW	3-1	AQ		C
LPLTM3317XHZZ	1-33	AL		C
LPLTM3431XHZZ	1-47	AG		C
LPLTM3436XHZZ	1-10	AG		C
LPLTM3437XHZZ	1-57	AG		C
LPLTM3441XHZZ	1-55	AL		C
LPLTP2884AXZA	1-22	AP		C
LPLTP3257XHZL	2-19	AE		C
LPLTP3257XHZR	2-20	AE		C
LPLTP3263XHSJ	3-2	AP		C
LPLTP3430XHZZ	2-21	AW		C
LPLTP3432XHSA	1-34	AW		C
〃	4-21	AW		C
LPLTP3433XHSA	1-35	AW		C
〃	4-22	AW		C
LPLTP3442XHSA	4-9	AQ		C
LX-BZ2138XHZ7	1-B6	AD		C
LX-BZ2222XHZ7	2-B2	AD		C
〃	3-B1	AD		C
LX-BZ2234XHZ7	1-B7	AA		C
LX-BZ2282XHZ7	1-B3	AE		C
LX-BZ2286XHZ7	1-B5	AE		C
【 M 】				
MARMP2034XHZA	2-22	AF		C
MARMP2042XHZA	1-70	AF		C
MARMP2046XHZZ	1-48	AH		C
MLEVP2426XHZZ	2-23	AH		C
MLEVP2427XHZZ	2-24	AK		C
MLEVP2428XHZZ	1-2	AK		C
MSPRC3387XHZZ	1-49	AD		C
MSPRC3406XHZZ	1-23	AD		C
MSPRC3407XHZZ	3-3	AE		C
MSPRC3470XHZZ	1-36	AF		C
MSPRC3488XHZZ	1-58	AE		C
MSPRC3489XHZZ	1-59	AE		C
MSPRC3630XHZZ	2-14	AE		C
MSPRC3634XHZZ	1-3	AE		C
MSPRD3398XHZZ	2-25	AE		C
MSPRD3399XHZZ	2-26	AE		C
MSPRD3495XHZZ	2-29	AE		C
MSPRD3632XHZZ	2-30	AE		C
MSPRD3633XHZZ	2-31	AE		C
MSPRD3636XHZZ	1-11	AE		C
MSPRD3637XHZZ	1-60	AE		C
MSPRD3656XHZZ	2-27	AE		C
MSPRD3657XHZZ	2-28	AE		C
MSPRP3119XHZZ	1-4	AC		C
MSPRT2932XHFJ	3-4	AC		C
【 N 】				
NGERH2365AXZZ	3-5	AD		C
NGERH2366AXZZ	3-6	AD		C
NGERH2611XHZZ	1-12	AE		C
〃	1-50	AE		C
NGERH2636XHZZ	1-37	AF		C
NGERH2639XHZZ	1-13	AF		C
NGERH2641XHZZ	1-6	AE		C
NGERH2717XHZZ	1-51	AP		C
NGERH2718XHZZ	1-14	AP		C
NGERH2719XHZZ	1-15	AP		C
NGERH2720XHZZ	1-16	AP		C
NGERH2721XHZZ	1-19	AP		C
NGERP2318XHZZ	2-15	AD		C
NRŌLP2332XHZA	2-32	AL		C
NRŌLR2549XHZZ	1-7	AU		C
NSFTP2413XHZZ	1-61	AL		C
NSFTZ2367XHZZ	1-20	AG		C
【 P 】				
PCŌVA2146XHSA	1-71	AY		C
PCUSU2238XHZZ	2-38	AE		C
PFLT-2039XHZZ	1-62	AK		C
PGiDM2493XHVB	3-9	AL		C
PGiDM2723XHSA	1-72	AT		C
PGiDM2724XHSA	2-16	AT		C
PGiDM2725XHSA	2-17	AT		C
PGiDM2726XHZZ	2-33	AT		C
PGiDM2727XHZZ	1-63	AT		C
PGiDM2728XHZZ	1-21	AT		C
PGiDM2729XHSA	1-24	AT		C
PGUMM2225XHZZ	1-73	AG		C
PHŌP-2095XHVD	3-7	AU		C
PSEL-2015XHZZ	3-8	AB		C
PSHEF3928XHZZ	2-34	AN		C
PSHEP3939XHZZ	2-35	AG		C
PSHEZ3293XHZZ	1-76	AH		C
PSHEZ3344XHZZ	1-77	AD		C
PSHEZ3410XHZZ	1-83	AB		C
PSHEZ3760XHZZ	1-25	AE		C
PSHEZ3770XHZZ	1-26	AG		C
【 Q 】				
QACCL2102XHZZ	1-40	AY		B
QCNCM2666XH0B	5-227	AD		C
QCNCM2666XH0D	5-226	AD		C
QCNCM2666XH0G	5-216	AE		C
QCNCM2666XH0H	5-225	AE		C
QCNCM2666XH1E	5-221	AF		C
〃	6-43	AF		C
QCNCM7014SC0B	5-217	AD		C
〃	5-219	AD		C
QCNCW2556SC0D	5-218	AH		C
QCNCW2556SC1D	5-223	AH		C
〃	5-224	AH		C
QCNCW2556SC1i	5-222	AG		C
QCNTM2054XHZZ	2-10	AP		C
QCNTM2055XHZZ	2-11	AP		C
QCNTM2056XHZZ	2-12	AT		C
QCNWG0376AFZZ	4-14	AM		C
QCNWG202DXHFW	4-13	AP		C
QCNWN200CXHZZ	1-41	AL		C
QCNWN205CXHZZ	6-4	AF		C
〃	6-49	AF		C
QCNWN253DXHZZ	1-66	AP		C
QCNWN263DXHZZ	1-54	AC		C
QCNWN294DXHZZ	1-42	AQ	N	C
QCNWN499CXHZZ	1-75	AP		C

PARTS CODE	No.	PRICE RANK	NEW MARK	PART RANK
〃	2-36	AP		C
QFS-L2016XHZZ	5-233	AD		A
QJAKT2089XHZZ	5-220	AT		C
QJAKZ2079XH0D	6-42	AD		C
QJAKZ2087XH0B	6-45	AD		C
QJAKZ2087XH0D	6-44	AE		C
QPLGZ9065AFZZ	4-28	AP		C
【 R 】				
RC-FZ3078SCZZ	6-7	AF		C
RC-FZ3079SCZZ	6-6	AG		C
RCiLF2125SCZZ	6-53	AF		C
RCiLZ2200XHZZ	5-255	AP		C
RC-KZ3122SCZZ	5-174	AL		C
〃	5-181	AL		C
RCORF2137XHZZ	1-80	AF		B
RCORF2145XHZZ	1-43	AF		B
RCRSA2233XHPZ	5-438	AG		B
RCRSP2236XHZZ	5-437	AK		B
RCRSP2237XHZZ	5-439	AK		B
RDENT2228XHZZ	1-44	BF		E
〃	7-901	BF		E
RFiLN2027XHZZ	6-51	AC		C
〃	6-52	AC		C
〃	6-54	AC		C
〃	6-55	AC		C
RH-DX2007SCZZ	6-108	AC		B
RH-iX2346XHZZ	5-239	AG		B
〃	5-241	AG		B
RH-iX2383XHZZ	6-50	AG		B
RH-iX2505XHPZ	5-234	BG		B
RMOTS2209XHZZ	1-17	AV		B
RRLYD3434XHZZ	6-41	AP		B
RR-SZ3047SCZZ	5-387	AA		C
〃	5-388	AA		C
〃	5-389	AA		C
〃	5-390	AA		C
RR-SZ3048SCZZ	5-391	AA		C
〃	5-392	AA		C
RTRNi2165XHZZ	6-110	AG		B
RTRNL2178SCZZ	5-248	AA		B
RUNTZ2145XHZZ	1-67	BN		B
【 S 】				
SPAKA275HXHZZ	4-10	AQ		D
SPAKA276HXHZZ	4-17	AQ		D
SPAKA364HXHZZ	4-24	AF		D
SPAKA441HXHZZ	4-15	AG	N	D
SPAKA442HXHZZ	4-16	AQ	N	D
SPAKP274HXHZZ	4-18	AQ		D
SPAKP420DXHZZ	4-26	AF		D
SSAKA2008XHZZ	4-25	AA		D
SSAKA3001CCZZ	4-27	AA		D
【 T 】				
TCADH3939XHZZ	4-2	AF	N	D
TiNSE4562XHTZ	4-1	AM	N	D
TLABH415KXHSA	4-6	AK		D
TLABH545KXHZZ	1-82	AE		D
【 U 】				
UBATL2232XHZZ	5-1	AF		B
UiNK-2046XHZZ	4-20	BN		A
【 V 】				
VCCCCY1HH221J	6-26	AA		C
VCCCCY1HH470J	5-205	AA		C
〃	5-206	AA		C
〃	5-207	AA		C
〃	5-208	AA		C
〃	5-212	AA		C
〃	5-213	AA		C
〃	5-214	AA		C
〃	5-215	AA		C
VCCCCY1HH560J	5-203	AA		C
〃	5-204	AA		C
VCCCCY1HH680J	6-32	AA		C
VCCCCZ1EH101J	5-66	AA		C
〃	5-67	AA		C
〃	5-68	AA		C
〃	5-69	AA		C
〃	5-134	AA		C
VCCCCZ1EH180J	5-176	AA		C
〃	5-177	AA		C
VCCCCZ1EH221J	5-84	AB		C
〃	5-85	AB		C
〃	5-86	AB		C

PARTS CODE	No.	PRICE RANK	NEW MARK	PART RANK
〃	5-107	AB		C
〃	5-108	AB		C
〃	5-109	AB		C
〃	5-110	AB		C
〃	5-115	AB		C
〃	5-119	AB		C
〃	5-122	AB		C
〃	5-123	AB		C
〃	5-126	AB		C
〃	5-127	AB		C
〃	5-130	AB		C
〃	5-132	AB		C
VCCCCZ1EH270J	5-58	AA		C
〃	5-59	AA		C
VCCCCZ1EH7R0D	5-51	AA		C
〃	5-52	AA		C
VCEAEA1CW226M	6-14	AA		C
VCEAEA1EW475M	6-15	AA		C
VCEAGA1CW476M	6-10	AB		C
VCEAGA1HW106M	6-5	AA		C
〃	6-11	AA		C
VCEAGA1HW107M	6-9	AA		C
〃	6-13	AA		C
VCEAGA1HW226M	5-135	AB		C
〃	5-145	AB		C
〃	6-8	AB		C
VCEAZA1HW227M	5-146	AG		C
〃	5-162	AG		C
VCFYDA1HA334J	6-12	AC		C
VCKYCY1AB105K	5-111	AB		C
〃	5-116	AB		C
〃	5-128	AB		C
〃	5-140	AB		C
〃	5-141	AB		C
〃	5-198	AB		C
〃	6-88	AB		C
VCKYCY1AF105Z	5-57	AC		C
〃	5-192	AC		C
VCKYCY1CB104K	5-106	AB		C
〃	6-19	AB		C
〃	6-28	AB		C
〃	6-31	AB		C
〃	6-35	AB		C
〃	6-37	AB		C
〃	6-40	AB		C
VCKYCY1HB102K	5-199	AA		C
〃	5-200	AA		C
〃	5-201	AA		C
〃	5-202	AA		C
〃	6-22	AA		C
〃	6-23	AA		C
〃	6-27	AA		C
〃	6-33	AA		C
VCKYCY1HB103K	6-36	AA		C
VCKYCY1HB152K	6-25	AB		C
VCKYCY1HB183K	6-21	AB		C
VCKYCY1HB222K	6-38	AA		C
〃	6-39	AA		C
VCKYCY1HB223K	6-29	AC		C
VCKYCY1HB563K	6-17	AC		C
VCKYCY1HB683K	6-30	AC		C
VCKYCY1HB821K	6-34	AA		C
VCKYCY1HF104Z	5-83	AA		C
〃	5-139	AA		C
〃	5-144	AA		C
〃	5-147	AA		C
〃	5-148	AA		C
〃	5-149	AA		C
〃	5-150	AA		C
〃	5-151	AA		C
〃	5-152	AA		C
〃	5-161	AA		C
〃	5-163	AA		C
〃	5-193	AA		C
〃	5-194	AA		C
〃	5-195	AA		C
〃	6-16	AA		C
〃	6-24	AA		C
VCKYCZ0JB105K	5-155	AB		C
VCKYCZ1AB104K	5-61	AC		C
〃	5-87	AC		C
〃	5-88	AC		C

PARTS CODE	No.	PRICE RANK	NEW MARK	PART RANK
〃	5-117	AC		C
〃	5-118	AC		C
〃	5-159	AC		C
VCKYCZ1CB103K	5-156	AA		C
〃	5-157	AA		C
〃	5-158	AA		C
〃	5-175	AA		C
〃	5-191	AA		C
VCKYCZ1CB683K	5-160	AE		C
VCKYCZ1CF104Z	5-46	AB		C
〃	5-47	AB		C
〃	5-48	AB		C
〃	5-49	AB		C
〃	5-50	AB		C
〃	5-54	AB		C
〃	5-55	AB		C
〃	5-60	AB		C
〃	5-62	AB		C
〃	5-63	AB		C
〃	5-64	AB		C
〃	5-65	AB		C
〃	5-71	AB		C
〃	5-73	AB		C
〃	5-74	AB		C
〃	5-75	AB		C
〃	5-76	AB		C
〃	5-77	AB		C
〃	5-78	AB		C
〃	5-79	AB		C
〃	5-80	AB		C
〃	5-81	AB		C
〃	5-89	AB		C
〃	5-90	AB		C
〃	5-92	AB		C
〃	5-94	AB		C
〃	5-96	AB		C
〃	5-97	AB		C
〃	5-99	AB		C
〃	5-100	AB		C
〃	5-101	AB		C
〃	5-103	AB		C
〃	5-114	AB		C
〃	5-129	AB		C
〃	5-137	AB		C
〃	5-153	AB		C
〃	5-154	AB		C
〃	5-166	AB		C
〃	5-167	AB		C
〃	5-168	AB		C
〃	5-169	AB		C
〃	5-170	AB		C
〃	5-171	AB		C
〃	5-172	AB		C
〃	5-173	AB		C
〃	5-178	AB		C
〃	5-179	AB		C
〃	5-180	AB		C
〃	5-182	AB		C
〃	5-183	AB		C
〃	5-184	AB		C
〃	5-185	AB		C
〃	5-186	AB		C
〃	5-187	AB		C
〃	5-189	AB		C
〃	5-196	AB		C
〃	5-197	AB		C
VCKYCZ1EB102K	5-70	AA		C
〃	5-82	AA		C
〃	5-91	AA		C
〃	5-98	AA		C
〃	5-105	AA		C
〃	5-136	AA		C
〃	5-164	AA		C
〃	5-165	AA		C
VCKYCZ1EB222K	5-138	AB		C
〃	5-143	AB		C
VCKYCZ1EB472K	5-124	AA		C
〃	5-125	AA		C
VCKYTV1AF106Z	5-53	AC		C
〃	5-56	AC		C
〃	5-93	AC		C
〃	5-95	AC		C

PARTS CODE	No.	PRICE RANK	NEW MARK	PART RANK
〃	5-102	AC		C
〃	5-131	AC		C
〃	5-190	AC		C
VHD1N4148//-1	6-46	AA		B
〃	6-47	AA		B
VHD1SS352F+-1	5-228	AF		B
〃	5-230	AF		B
〃	5-231	AF		B
VHD1SS355//-1	6-48	AB		B
VHDB340A+++-1	5-440	AH		B
VHDRB715F//-1	5-229	AF		B
VHEHZ2A1///-1	6-113	AC		B
〃	6-114	AC		B
VHEMTZJ100B-1	6-115	AC		B
VHEMTZJ200B-1	6-117	AC		B
VHEMTZJ300B-1	6-116	AA		B
VHEMTZJ6R8B-1	6-112	AC		B
VHEPTZ12B++-1	5-441	AG		B
VHHTBPS333H-1	5-436	AF		B
VHi14D0830+-1	5-244	AU		B
VHi25V016CS-1	5-235	AX		B
VHiBA178M24-1	5-435	AL		B
VHiCX20452+-1	5-240	AY		B
VHiCX20556+-1	5-251	AU		B
VHiF016+TF64B	5-238	AZ	N	B
VHiKiA78L05BP	6-109	AF		B
VHiLD111733-1	5-434	AN		B
VHiLN91C113-1	5-246	BA		B
VHiLV125AT+-1	5-237	AN		B
VHiLVC2G14D-1	5-247	AN		B
VHiNJM2113M-1	5-242	AG		B
VHiS64AH75E-1	5-236	BA		B
VHiTC7PA04+-1	5-245	AG		B
VHiTC7PA53F-1	5-243	AG		B
〃	5-249	AG		B
〃	5-250	AG		B
VHPGP1S094HCZ	5-261	AG		B
VHPPS2535-1//	6-56	AH		B
VHPPS2561L-1/	6-57	AG		B
VHPSG206S//-1	6-58	AG		B
〃	8-1	AG		B
〃	8-2	AG		B
〃	8-3	AG		B
VHVDSS301L/-U	6-1	AF		B
VHVRA501PC6-1	6-2	AG		B
〃	6-3	AG		B
VHVTN07G101-1	6-111	AB		B
VRD-HT2EY101J	6-71	AA		C
〃	6-72	AA		C
VRD-HT2EY103J	6-67	AA		C
VRD-HT2EY150J	6-66	AA		C
〃	6-68	AA		C
VRD-HT2EY151J	6-73	AA		C
VRD-HT2EY221J	6-69	AA		C
VRD-HT2EY433J	6-70	AA		C
VRD-HT2HY223J	6-74	AA		C
VRS-CG1JF000J	5-37	AB		C
〃	5-38	AB		C
〃	5-44	AB		C
〃	5-45	AB		C
VRS-CG1JF101J	5-2	AA		C
〃	5-3	AA		C
〃	5-4	AA		C
〃	5-5	AA		C
〃	5-6	AA		C
〃	5-7	AA		C
〃	5-8	AA		C
〃	5-17	AA		C
〃	5-22	AA		C
〃	5-23	AA		C
〃	5-24	AA		C
〃	5-27	AA		C
〃	5-28	AA		C
〃	5-29	AA		C
〃	5-30	AA		C
〃	5-31	AA		C
VRS-CG1JF103J	5-9	AC		C
〃	5-36	AC		C
〃	5-39	AC		C
VRS-CG1JF221J	5-21	AC		C
〃	5-32	AC		C
〃	5-33	AC		C

PARTS CODE	No.	PRICE RANK	NEW MARK	PART RANK
〃	5-34	AC		C
〃	5-35	AC		C
VRS-CG1JF271J	5-10	AD		C
〃	5-11	AD		C
〃	5-15	AD		C
〃	5-16	AD		C
〃	5-26	AD		C
VRS-CG1JF330J	5-12	AC		C
〃	5-13	AC		C
〃	5-14	AC		C
〃	5-18	AC		C
〃	5-19	AC		C
〃	5-20	AC		C
〃	5-25	AC		C
〃	5-40	AC		C
〃	5-41	AC		C
VRS-CG1JF333J	5-42	AC		C
〃	5-43	AC		C
VRS-CY1JB000J	5-113	AA		C
〃	5-121	AA		C
〃	5-232	AA		C
〃	5-252	AA		C
〃	5-253	AA		C
〃	5-254	AA		C
〃	5-256	AA		C
〃	5-258	AA		C
〃	5-369	AA		C
〃	5-370	AA		C
〃	5-410	AA		C
〃	5-411	AA		C
〃	5-415	AA		C
〃	6-18	AA		C
〃	6-20	AA		C
〃	6-96	AA		C
VRS-CY1JB102J	6-91	AA		C
〃	6-93	AA		C
〃	6-98	AA		C
〃	6-106	AA		C
VRS-CY1JB103J	6-92	AA		C
〃	6-94	AA		C
VRS-CY1JB113J	6-99	AA		C
VRS-CY1JB152J	6-105	AA		C
VRS-CY1JB154J	6-95	AA		C
〃	6-101	AA		C
VRS-CY1JB162J	6-82	AA		C
VRS-CY1JB203J	6-90	AA		C
VRS-CY1JB222J	6-104	AA		C
VRS-CY1JB223J	6-83	AA		C
〃	6-84	AA		C
VRS-CY1JB224J	6-97	AA		C
VRS-CY1JB271J	6-80	AA		C
VRS-CY1JB332J	6-87	AA		C
〃	6-89	AA		C
〃	6-102	AA		C
VRS-CY1JB333J	6-85	AA		C
〃	6-86	AA		C
VRS-CY1JB392J	6-79	AA		C
VRSCY1JB49R9F	5-397	AG		C
〃	5-398	AG		C
〃	5-399	AG		C
〃	5-400	AG		C
〃	5-401	AG		C
〃	5-402	AG		C
VRS-CY1JB621J	6-81	AA		C
VRSCY1JB75R0F	5-385	AD		C
〃	5-386	AD		C
VRS-CY1JB822J	6-100	AA		C
VRS-CY1JB913J	6-103	AA		C
VRS-CZ1JB000J	5-104	AA		C
〃	5-120	AA		C
〃	5-133	AA		C
〃	5-142	AA		C
〃	5-188	AA		C
〃	5-209	AA		C
〃	5-210	AA		C
〃	5-211	AA		C
〃	5-257	AA		C
〃	5-269	AA		C
〃	5-270	AA		C
〃	5-277	AA		C
〃	5-280	AA		C
〃	5-294	AA		C

PARTS CODE	No.	PRICE RANK	NEW MARK	PART RANK
〃	5-297	AA		C
〃	5-306	AA		C
〃	5-307	AA		C
〃	5-308	AA		C
〃	5-314	AA		C
〃	5-317	AA		C
〃	5-324	AA		C
〃	5-325	AA		C
〃	5-330	AA		C
〃	5-339	AA		C
〃	5-342	AA		C
〃	5-343	AA		C
〃	5-344	AA		C
〃	5-345	AA		C
〃	5-346	AA		C
〃	5-377	AA		C
〃	5-413	AA		C
〃	5-414	AA		C
〃	5-418	AA		C
〃	5-420	AA		C
〃	5-421	AA		C
〃	5-425	AA		C
〃	5-427	AA		C
〃	5-432	AA		C
〃	5-433	AA		C
VRS-CZ1JB100J	5-412	AA		C
VRS-CZ1JB101J	5-284	AA		C
〃	5-285	AA		C
〃	5-286	AA		C
〃	5-293	AA		C
〃	5-295	AA		C
VRS-CZ1JB102J	5-327	AA		C
〃	5-335	AA		C
〃	5-408	AA		C
VRS-CZ1JB103J	5-72	AA		C
〃	5-273	AA		C
〃	5-276	AA		C
〃	5-290	AA		C
〃	5-299	AA		C
〃	5-300	AA		C
〃	5-301	AA		C
〃	5-303	AA		C
〃	5-304	AA		C
〃	5-305	AA		C
〃	5-312	AA		C
〃	5-313	AA		C
〃	5-315	AA		C
〃	5-319	AA		C
〃	5-349	AA		C
〃	5-350	AA		C
〃	5-358	AA		C
〃	5-362	AA		C
〃	5-364	AA		C
〃	5-371	AA		C
〃	5-372	AA		C
〃	5-375	AA		C
〃	5-381	AA		C
〃	5-382	AA		C
〃	5-403	AA		C
〃	5-404	AA		C
〃	5-405	AA		C
〃	5-409	AA		C
〃	5-426	AA		C
VRS-CZ1JB104J	5-272	AA		C
〃	5-281	AA		C
〃	5-288	AA		C
〃	5-289	AA		C
〃	5-296	AA		C
〃	5-316	AA		C
〃	5-331	AA		C
〃	5-366	AA		C
〃	5-417	AA		C
〃	5-429	AA		C
〃	5-430	AA		C
〃	5-431	AA		C
VRS-CZ1JB105J	5-278	AD		C
〃	5-393	AD		C
VRS-CZ1JB122J	5-279	AA		C
VRS-CZ1JB124F	5-359	AD		C
〃	5-361	AD		C
VRS-CZ1JB133J	5-309	AC		C
〃	5-311	AC		C

PARTS CODE	No.	PRICE RANK	NEW MARK	PART RANK
VRS-CZ1JB152J	5-348	AA		C
〃	5-354	AA		C
VRS-CZ1JB164J	5-329	AD		C
VRS-CZ1JB183J	5-328	AD		C
VRS-CZ1JB202J	5-112	AD		C
〃	5-321	AD		C
VRS-CZ1JB203J	5-326	AD		C
VRS-CZ1JB221J	5-282	AD		C
〃	5-383	AD		C
〃	5-406	AD		C
VRS-CZ1JB222F	5-368	AG		C
VRS-CZ1JB224J	5-332	AA		C
〃	5-334	AA		C
VRS-CZ1JB225J	5-271	AA		C
VRS-CZ1JB271J	5-291	AA		C
〃	5-298	AA		C
〃	5-423	AA		C
〃	5-424	AA		C
〃	5-428	AA		C
VRS-CZ1JB303J	5-341	AD		C
VRS-CZ1JB330J	5-287	AA		C
〃	5-376	AA		C
VRS-CZ1JB332J	5-310	AA		C
〃	5-320	AA		C
〃	5-333	AA		C
〃	5-340	AA		C
VRS-CZ1JB363F	5-355	AG		C
〃	5-360	AG		C
VRSCZ1JB3650F	5-357	AG		C
VRS-CZ1JB393J	5-318	AD		C
VRS-CZ1JB470J	5-395	AA		C
VRS-CZ1JB471J	5-292	AA		C
〃	5-378	AA		C
VRS-CZ1JB472J	5-302	AA		C
〃	5-323	AA		C
〃	5-337	AA		C
VRS-CZ1JB473J	5-322	AA		C
VRSCZ1JB4991F	5-283	AG		C
〃	5-373	AG		C
〃	5-374	AG		C
VRSCZ1JB5490F	5-356	AG		C
〃	5-363	AG		C
VRS-CZ1JB562J	5-351	AA		C
〃	5-416	AA		C
VRSCZ1JB6041F	5-365	AG		C
VRS-CZ1JB620J	5-347	AA		C
VRS-CZ1JB681J	5-394	AC		C
VRSCZ1JB7321F	5-367	AG		C
VRS-CZ1JB823J	5-336	AD		C
VRS-CZ1JB912F	5-338	AG		C
VRS-HT3AA1R3J	5-352	AE		C
〃	5-353	AE		C
VRS-HT3DA110J	5-422	AE		C
VRS-HT3DA221J	5-407	AB		C
VRS-RE2HA101J	6-75	AB		C
VRS-TS2AD000J	6-77	AA		C
VRS-TS2AD153J	6-76	AA		C
VRS-TS2AD301J	6-107	AA		C
VRS-TS2AD471J	6-78	AA		C
VRS-TV2AB000J	5-259	AA		C
〃	5-260	AA		C
〃	5-274	AA		C
〃	5-275	AA		C
〃	5-384	AA		C
VRS-TV2AB103J	5-379	AA		C
〃	5-380	AA		C
VRS-TV2AB113F	5-396	AA		C
VRS-TV2AB221J	5-419	AA		C
VS2SA2059++-1	5-262	AH		B
VS2SC2412K/-1	5-268	AB		B
VSBS108////-1	6-59	AE		B
VSKTC3198GR-1	6-60	AD		B
VSRN1402F++-1	5-263	AF		B
〃	5-264	AF		B
〃	5-266	AF		B
VSRN1406F++-1	5-265	AF		B
〃	5-267	AF		B
〃	6-61	AF		B
〃	6-62	AF		B
〃	6-63	AF		B
〃	6-64	AF		B
VSRN2402F++-1	6-65	AF		B

PARTS CODE	No.	PRICE RANK	NEW MARK	PART RANK
VVLLMG2025TPR	2-13	BA		B
【 X 】				
XEBS726P08000	2-B1	AE		C
XEBS726P10000	2-B3	AC		C
XEBS730P08000	1-B2	AC		C
XEBS730P10000	1-B1	AC		C
〃	3-B2	AC		C
XHBS730P06000	1-B4	AC		C
XWHS740-08100	1-W1	AA		C
【 0 】				
0KY0MPS902200	7-31	AF		C
0KYC10B2SQ470	7-7	AG		C
0KYC1102CC333	7-9	AC		C
0KYC1102EC472	7-8	AC		C
0KYC1131EC101	7-10	AC		C
0KYC1132BC104	7-13	AC		C
0KYC1384QS472	7-5	AG		C
〃	7-6	AG		C
0KYC2131QS104	7-3	AG		C
0KYC30A0BQ471	7-12	AL		C
0KYC30A0EQ101	7-11	AH		C
0KYC3138MS390	7-4	AU		C
0KYD1057AQ006	7-22	AF		B
〃	7-23	AF		B
〃	7-24	AF		B
〃	7-25	AF		B
0KYD2049BQ202	7-26	AQ		B
0KYD2051AQ002	7-16	AD		B
〃	7-17	AD		B
〃	7-19	AD		B
〃	7-20	AD		B
0KYD20Q0AQ003	7-27	AL		B
0KYD4055AQ022	7-18	AD		B
0KYD4055AQ065	7-21	AE		B
0KYD4145AA006	7-28	AK		B
0KYD7114AR005	7-65	AG		B
0KYH2211AR001	7-32	AL		B
0KYH7152AS001	7-36	AL		B
0KYK2051AQ002	7-14	AG		C
0KYK2148LS002	7-15	AG		C
0KYK7135AS003	7-29	AM		A
〃	7-30	AM		A
0KYL1173JL553	7-33	AS		C
0KYL2100DS010	7-63	BA		B
0KYL5051AQ001	7-1	AE		C
〃	7-2	AE		C
0KYR1053UQ470	7-53	AC		C
0KYR1053UQ562	7-55	AC		C
〃	7-56	AC		C
〃	7-57	AC		C
0KYR3111VC182	7-45	AC		C
0KYR3111VC221	7-51	AC		C
0KYR3111VC223	7-50	AB		C
0KYR3111VC272	7-59	AC		C
0KYR3111VC333	7-46	AB		C
0KYR3111VC472	7-60	AC		C
0KYR3111VC682	7-48	AB		C
0KYR3114VC103	7-49	AC		C
0KYR3114VC183	7-43	AC		C
0KYR3114VC562	7-61	AC		C
〃	7-62	AC		C
0KYR3121TC101	7-47	AB		C
〃	7-58	AB		C
0KYR3121TC222	7-44	AC		C
0KYR3121TC681	7-52	AB		C
0KYR3126TC394	7-40	AC		C
〃	7-41	AC		C
〃	7-42	AC		C
0KYR3133AC225	7-39	AC		C
〃	7-54	AC		C
0KYR8054EQ102	7-64	AG		C
0KYT2718KL001	7-37	AV		B
0KYT4097CC002	7-38	AG		B
0KYW0000AQ005	7-34	AC		C
0KYW0000AQ012	7-35	AC		C

SHARP

COPYRIGHT © 2007 BY SHARP CORPORATION
ALL RIGHTS RESERVED.

No Part of this publication may be reproduced,
stored in a retrieval system, or transmitted in
any from or by any means, electronic, mechanical,
photocopying , recording, or otherwise, without
prior written permission of the publisher.

SHARP CORPORATION
Communication Systems Group
Customer Satisfaction Promotion Center
Higashihiroshima, Hiroshima 739-0192, Japan
A0703-PDF•DS•IS•T