Digital World Receiver AE3905/00

Service
Service
Service

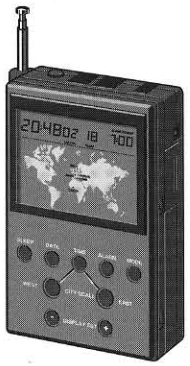

Service Manual

Table of contents

	page
Warnings	2
Specification	3
Connection & Controls	3 – 4
Dismantling hints	5 – 6
Blockdiagram	7 – 9
Tuner Board	
Component Layout	10 – 12
Circuit Diagram	13 – 15
NF Part	
Circuit Diagram	16 – 18
Component Layout	19 – 20
Adjustment table	21 – 22
Component Layout	23 – 25
Exploded view	26 – 27
Mechanical partslist	28
Electrical partslist	29 – 32

"Pour votre sécurite, ces documents doivent être utilisés par des spécialistes agrées, seuls habilités à réparer votre appareil en panne".

Published by Consumer Electronics Printed in The Netherlands Copyright reserved Subject to modification (GB) 4822 725 23708

PHILIPS

PHILIPS

CS 45 591

Handling chip components

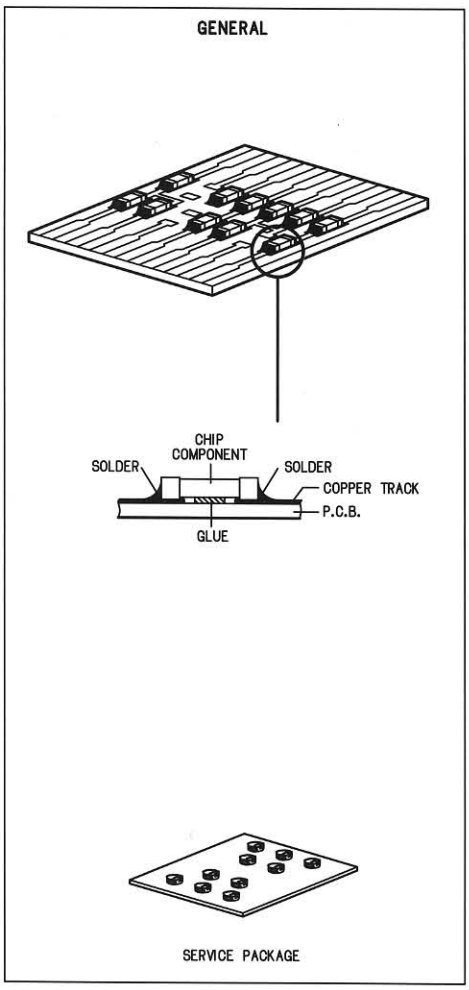

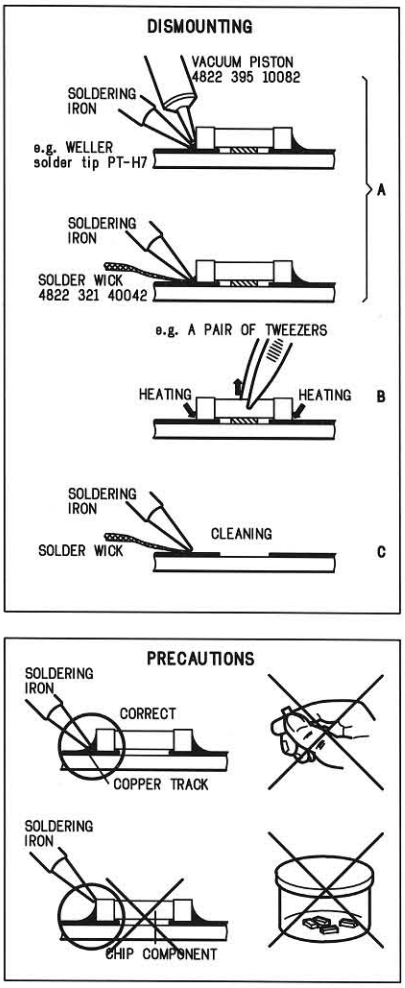

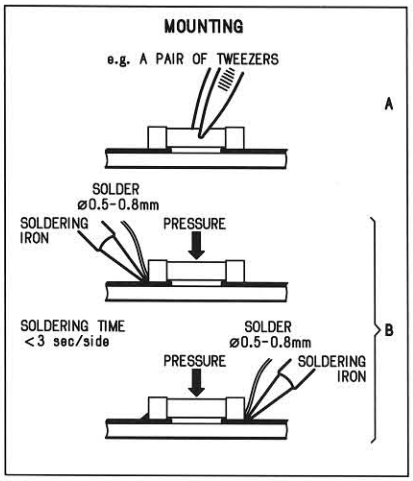

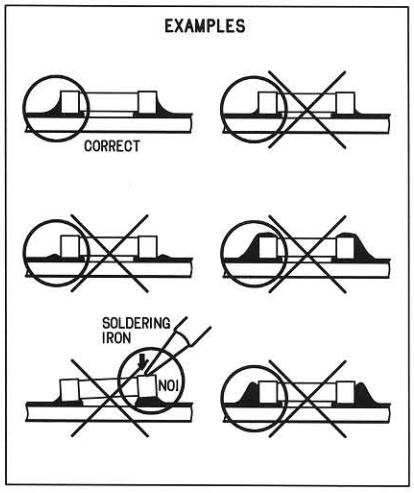

(GB) WARNING
All ICs and many other semiconductors are susceptible to electrostatic discharges (ESD). Careless handling during repair can reduce life drastically.
When repairing, make sure that you are connected with the same potential as the mass of the set via a wrist wrap with resistance. Keep components and tools at this potential.

(F) ATTENTION
Tous les IC et beaucoup d´autres semi-conducteurs sont sensibles aux décharges statiques (ESD). Leur longévite pourrait être considérablement écourtée par le fait qu´aucune précaution nést prise à leur manipulation.
Lors de réparations, s´assurer de bien être relié au même potentiel que la masse de l´appareil et enfileer le bracelet serti d´une résistance de sécurité.
Veiller à ce que les composants ainsi que les outils que l´on utilise soient également à ce potentiel.

(D) WARNUNG
Alle ICs und viele andere Halbleiter sind empfindlich gegenüber elektrostatischen Entladungen (ESD).
Unsorgfältige Behandlung im Reparaturfall kann die Lebensdauer drastisch reduzieren.
Sorgen Sie dafür, daß sie im Reparaturfall über ein Pulsarmband mit Widerstand mit dem Massepotential des Gerätes verbunden sind.
Halten Sie Bauteile und Hilfsmittel ebenfalls auf diesem Potential.

(NL) WAARSCHUWING
Alle IC´s en vele andere halfgeleiders zijn gevoelig voor electrostatische ontladingen (ESD).
Onzorgvuldig behandelen tijdens reparatie kan de levensduur drastisch doen vermindern. Zorg ervoor dat u tijdens reparatie via een polsband met weerstand verbonden bent met hetzelfde potentiaal als de massa van het apparaat.
Houd componenten en hulpmiddelen ook op ditzelfde potentiaal.

(I) AVVERTIMENTO
Tutti IC e parecchi semi-conduttori sono sensibili alle scariche statiche (ESD).
La loro longevità potrebbe essere fortemente ridatta in caso di non osservazione della più
grande cauzione alla loro manipolazione. Durante le riparationi occorre quindi essere collegato allo stesso potenziale che quello della massa deláppparecchio tramite un braccialetto a resistenza.
Assicurarsi che i componenti e anche gli utensili con quali si lavora siano anche a questo potenziale.

(GB)
Safety regulations require that the set be restored to its original condition and that parts which are identical with those specified be used.

(D)
Bei jeder Reparatur sind die geltenden Sicherheitsvorschriften zu beachten. Der Originalzustand des Gerätes darf nicht verändert werden. Für Reparaturen sind Originalersatzteile zu verwenden.

(I)
Le norme di sicurezza estigono che l´apparecchio venga rimesso nelle condizioni originali e che siano utilizzati i pezzi di ricambiago identici a quelli specificati.

(F)
Les normes de sécurité exigent que l`appareil soit remis à l`état d`origine et que soient utilisées les pièces de rechange identiques à celles spécifiées.

(NL)
Veiligheidsbepalingen vereisen, dat het apparaat in zijn oorspronkelijke toestand wordt teruggebracht en dat onderdelen, identiek aan de gespecificeerde, worden toegepast.

Specification:

General:

Nominal Voltage	: 3 V
Current consumption	: 40 mA in FM
(with headphone 32 Ω)	: 50 mA in AM
	: 10 μA in Radio off (Clock)
Low Voltage auto shutoff	: < 2,2 V
Low Batt detection	: 2,4 ± 0,1 V
Battery lifetime (alkalyn)	: > 15 hours
External DC	: 3 V / 150 mA

FM Part:

Frequency range	: 87,5 – 108 MHz
Tuning Step	: 100 kHz
IF Frequency	: 10,7 MHz
Sensitivity	
mono S/N = 26 dB	: 2 μV
stereo S/N = 46 dB	: 80 μV
– 3 dB limiting point	: 3 μV
Search sensitivity	: > 3 μV
Stereo switching level	: > 3 μV
Distortion at f = 75 kHz	: 2 %
Image Rejection	: 26 dB
IF suppression	: 70 dB
Channel separation	
at 10 V	: > 5 dB
at 100 V	: 26 dB
at 1000 V	: 26 dB
IF bandwidth	: 150 ± 40kHz
LOCAL – DX	: 20 – 30 dB attenuation
AF Frequency response	: 20 Hz – 17 kHz

LF–Part:

Output power	
Stereo Headphone 32 Ω	: 2 x 10 mW
Loudspeaker 32 Ω	: 80 mW
Volume Control	
Control range	: 70 dB min.
Control signal	: PWM 32 Hz 30 steps
5kHz suppression for AM	: 30 dB
Mute attenuation	: 60 dB

AM Part:

Frequency range	: 147 – 29995 kHz
Tuning steps	
147 – 516 kHz	: 3 kHz
522 – 1701 kHz	: 9 kHz } ext. switchable
520 – 1700 kHz	: 10 kHz } ext. switchable
1705 – 29995 kHz	: 5 kHz
Search sensitivity	
LW	: > 500 V/m
MW	: > 300 V/m
SW	: > 10 V
1st IF frequency	: 55,845 MHz
2nd IF frequency	: 450 kHz
LOCAL – DX	: 20 – 30 dB attenuation
AF Frequency response	: 20 Hz – 2,2 kHz

Connection & Controls

Adjusting time, date and alarmtime (1003 Clock foil)
Adjust successively the timezone, hours and minutes:
- Keep TIME button pressed.
- One or more place names start blinking in the display.
- Adjust the timezone using the DISPLAY SET + or – buttons and then release the TIME button.
- Repeat this procedure for adjusting the hours and the minutes.

Note: When you press any other function button during this procedure, time setting starts all from the beginning.

Adjust successively the years, months and days:
- Keep the DATE button pressed.
- The 'years' indication starts blinking in the display.
- Adjust the years using the DISPLAY + or – buttons and then release the DATE button.
- Repeat this procedure for adjusting the months and the days.

Adjust successively the hours and the minutes:
- Keep the ALARM button pressed.
- The 'hours' indication starts blinking in the display.
- Adjust the hours using the DISPLAY + or – buttons and then release the ALARM button.
- Repeat this procedure for adjusting the minutes.

World time
In the display at the right side you can read the time in another city or part of the world.
- Press CITY SCAN EAST or WEST briefly each time until you reach the desired city or timezone. The 'city-time' appears in the display.

Note: The set does not take summertime in account.

Radio
9 / 10 KHz – 24 / 12 hours switch **(1401)**
With the 9 / 10 KHz switch you can select the size of the frequency step between adjacent channels in the AM (=MW) band.
At the same time you select the 12 or 24 hours clocksystem:
- 9 KHz corresponds with the 24 hours clock.
- 10 KHz corresponds with the 12 hours clock.

In North– and South America it should be set to 10 KHz / 12 hours clock. In all other parts of the world to 9 KHz / 24 hours clock.

In case of the 12 hours clock, the AM or PM indicator appears in the display.

Antenna
- For FM, pull out the telescopic antenna**(417)**. To improve FM-reception, incline and turn the antenna. Reduce its length if the FM-signal is too strong (very close to a station). To improve FM reception use the supplied SW antenna **(type SBC 3581)**.
- For AM (=MW) and LW, the set is provided with a built-in antenna, so there is no need to use the telescopic antenna. The antenna can be directed by turning the whole set.
- For SW, the telescopic antenna must be pulled out and placed in the vertical position. To improve SW-reception, vary the length of the antenna or use the supplied SW-antenna (type SBC 3581).

Local / distance
With the local / distance switch **(1005 Tuner foil)** you can adjust the sensitivity of the radio.
- Press LOCAL / DISTANCE. 'LOCAL' indication appears in the display. Only strong transmitters are received, and weak transmitters or interference (caused by computers, TV-sets etc.) will be suppressed.

News or music
With the NEWS or MUSIC button, you can influence the sound:
- Press NEWS**(1503)**; the high tones are increased which is more suitable for listening to newsreports.
- Press MUSIC**(1504)**; the bass tones are increased which is more suitable for listening to the music.

Tuning (1005 Tuner foil)
There are 3 possibilities to tune to a frequency:
Automatic tuning
- Keep TUNING + or – pressed until indication A (automatic tuning) appears in the display; then release the button. Tuning stops when a strong staion is found.
- If this is not the station of your choise, simply repeat this operation.

Manual tuning
- Keep TUNING + or – pressed until you approach the required frequency and then release the button.

- Then
  reque
  found

Direct tu
When y
can dire
- Selec
- Press

Memory
You car
on the o
Manual
- Tune
- Keep
  blinki
- Now

PRESET
Note: a
another

Tuning
- Press
- Press
- Press

- Then press TUNING + or – briefly each time. In this way the f requency is changed step by step until the desired frequency is found.

Direct tuning
When you already know the frequency of the desired station, you can directly tune to this frequency:
- Select the digits of the frequency with the PRESET buttons 1...9.
- Press the FM or AM button.

Memory presets
You can store the frequencies of 18 radiostations: 9 on FM and 9 on the other bands (AM/LW/SW).
Manual programming of preset stations
- Tune to the radiostation you want to store.
- Keep MEMORY button pressed. The PRESET symbol starts blinking.
- Now press the desired PRESET button 1...9. The chosen PRESET button is shown in the display and the frequency is stored.

Note: a stored frequency is only erased from the memory by storing another frequency in its place.

Tuning to preset stations
- Press FM or AM.
- Press the MEMORY button.
- Press the desired PRESET button 1...9.

Autostore presets
You can store the frequencies of 18 radiostations: 9 on FM and 9 on the other bands (AM/LW/SW).
Automatic programming of preset stations
- Press AUTO STORE button for more than 2 seconds. Then release this button. 9 stations in the desired waveband will now be stored automatically in the memory.
- When AUTO STORE is finished, the stored stations are scanned once automatically and you hear each station for 3 seconds.
- To stop auto store, press any button.

Tuning to autostore presets
- Press the AUTOSTORE button.
- Press the desired PRESET button 1...9.

General information
Lock switch **(1402)**
To prevent accidental pressing of buttons the set is provided with a LOCK switch.
- Set LOCK switch to position LOCK. All buttons will be locked, except ALARM REPEAT, BUZZER OFF, VOLUME, MUSIC, NEWS and POWER ON/OFF.

Reset
If the display shows false information, you can reset the set:
- Take out the batteries temporarily and place a coin in the battery compartment.

During battery replacement, the clock and station memory will be saved.

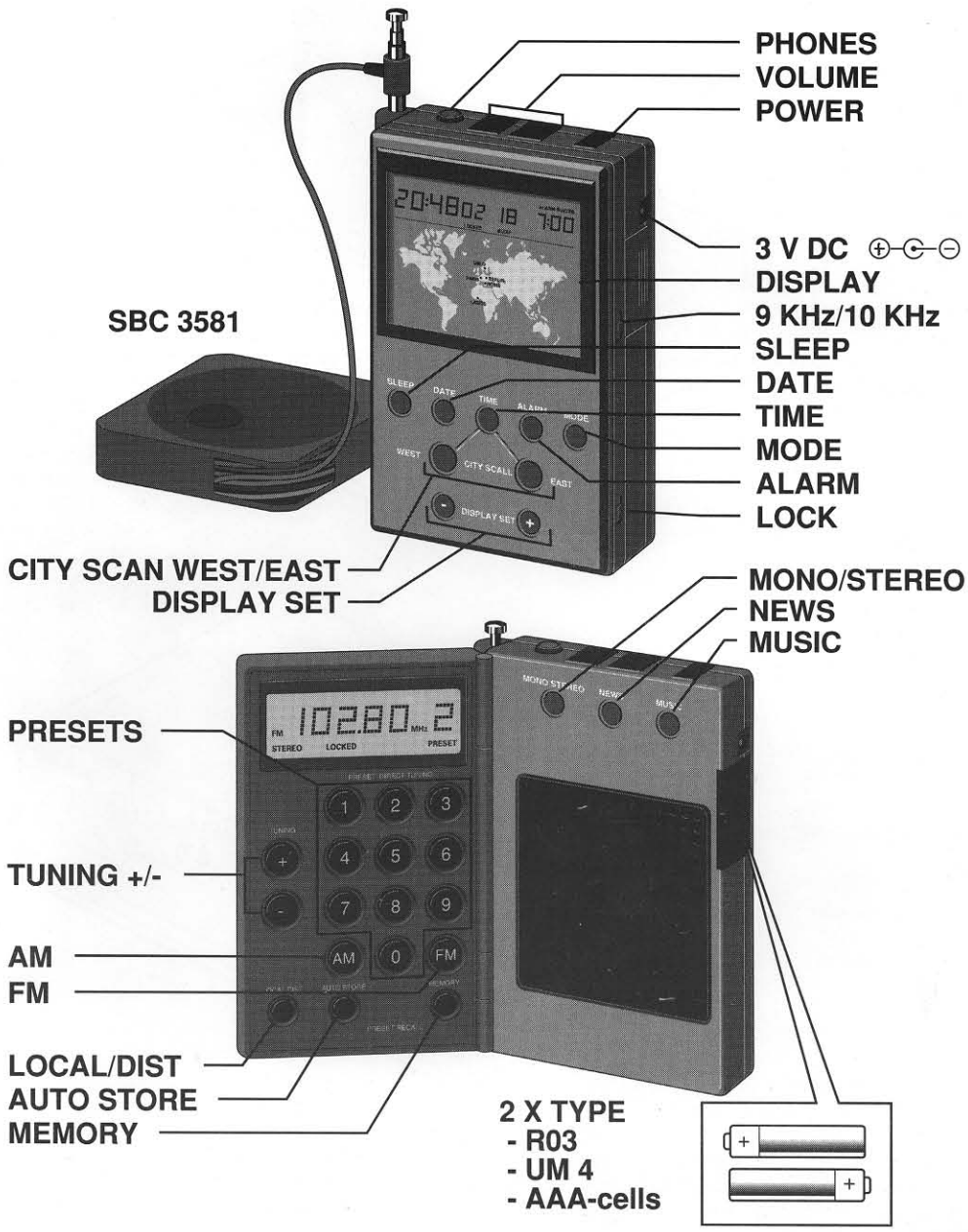

DISMANTLING HINTS

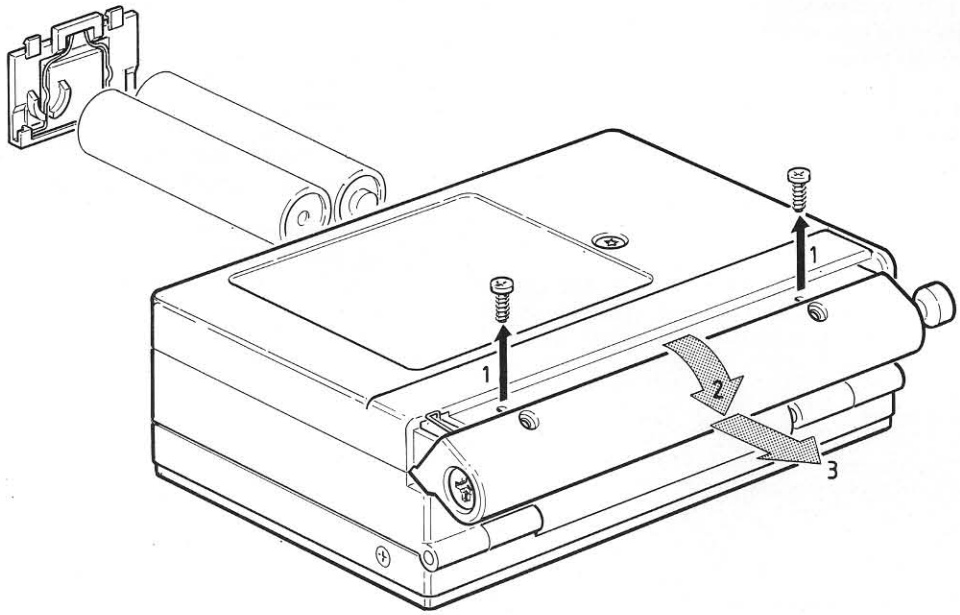

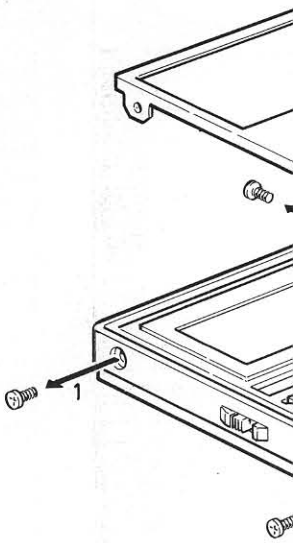

DISCONNECT FLEXPRINT ON TUNER SIDE BEFORE DISMANTLING CONTROL UNIT.

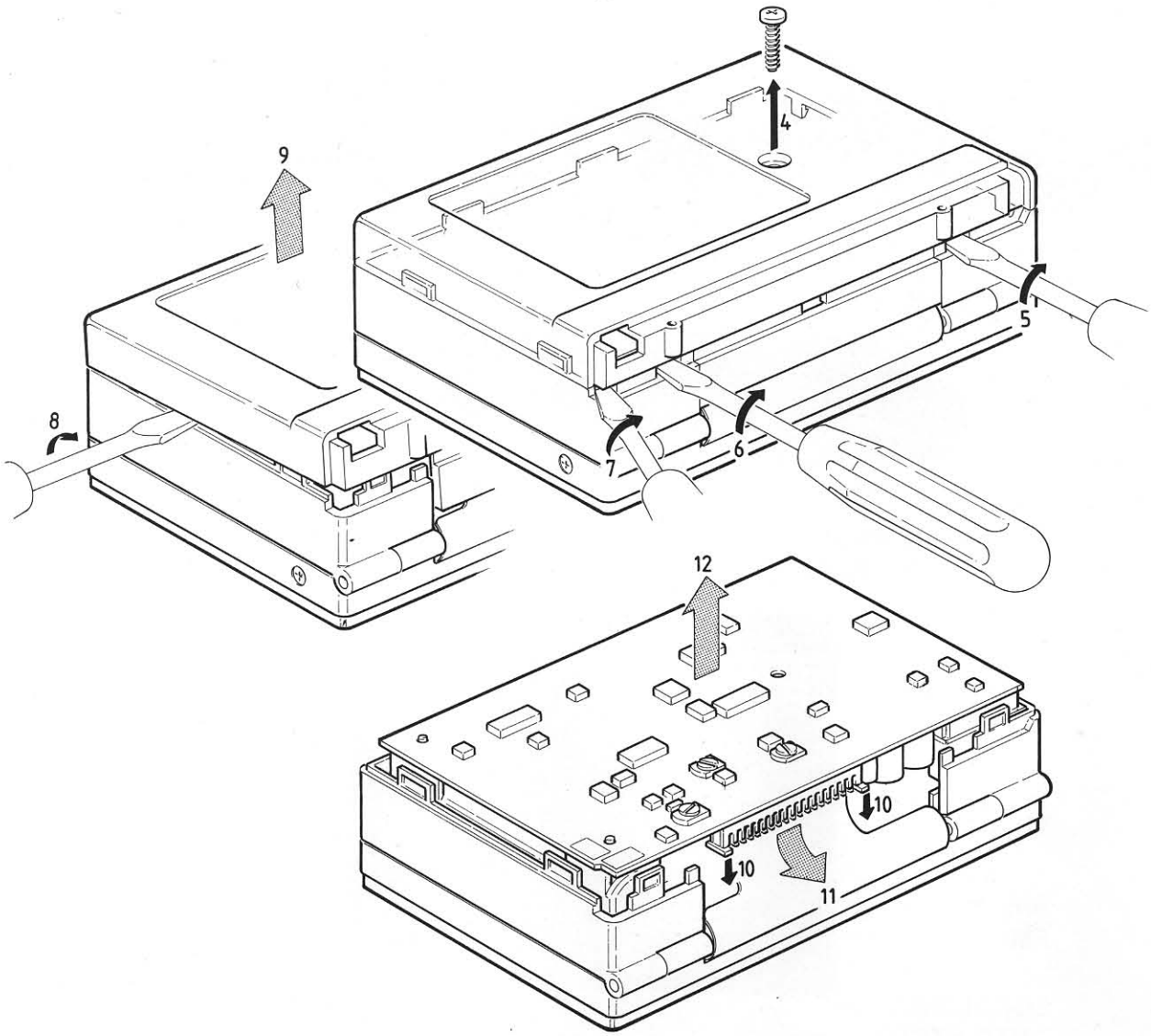

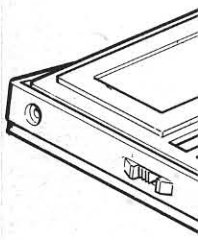

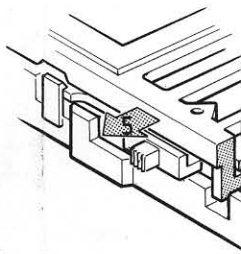

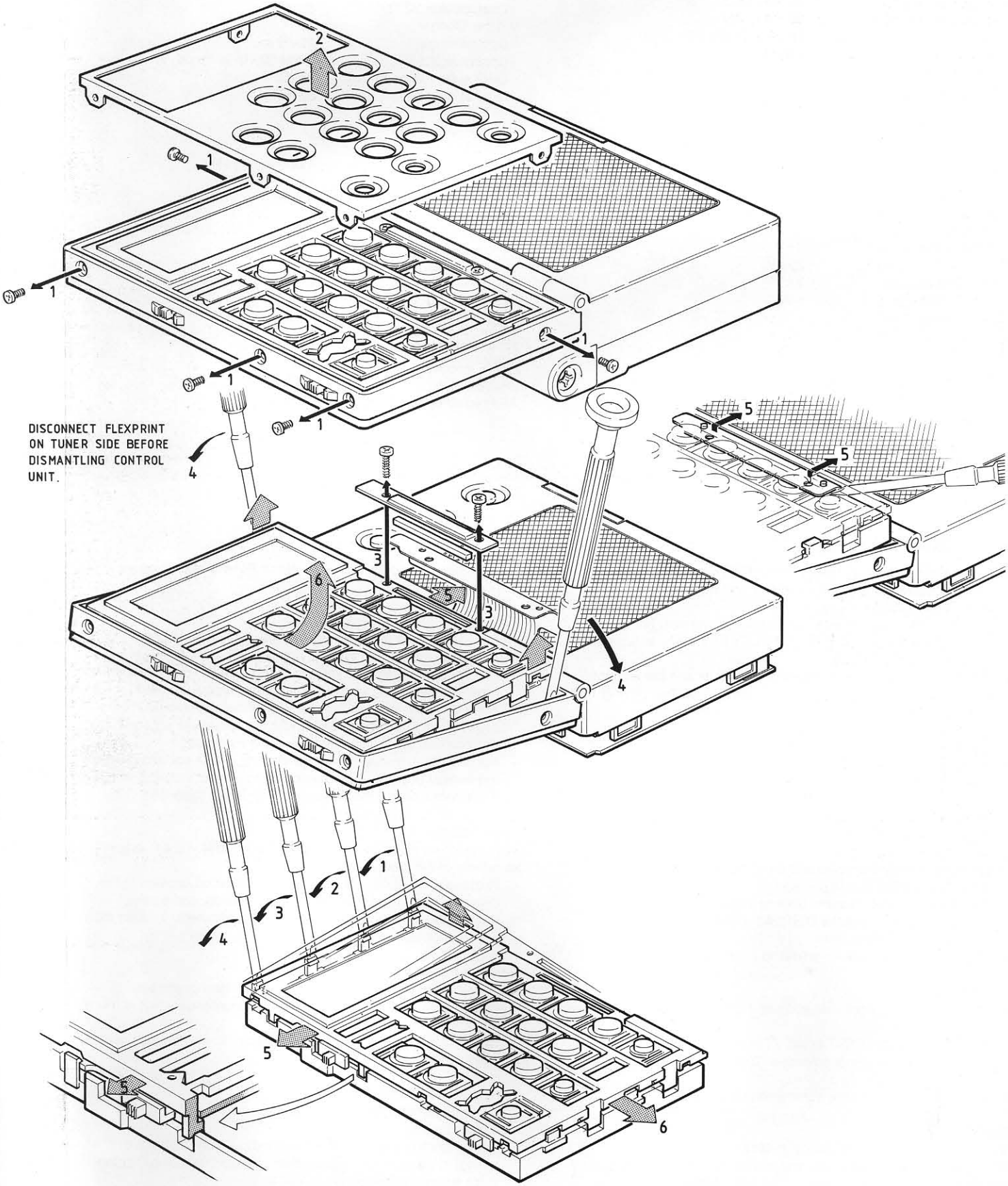
DISCONNECT FLEXPRINT
ON TUNER SIDE BEFORE
DISMANTLING CONTROL
UNIT.

BLOCKDIAGRAM

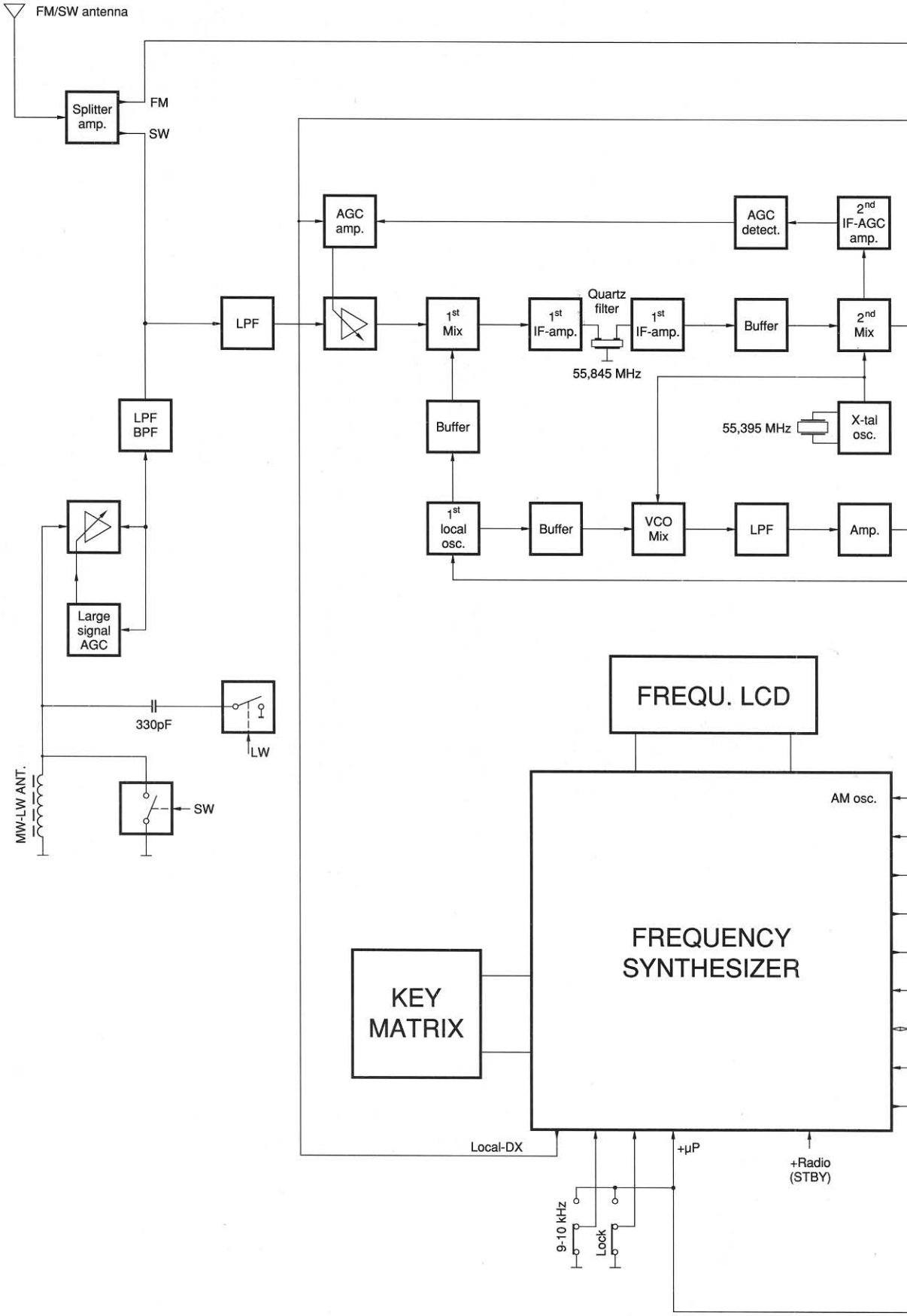

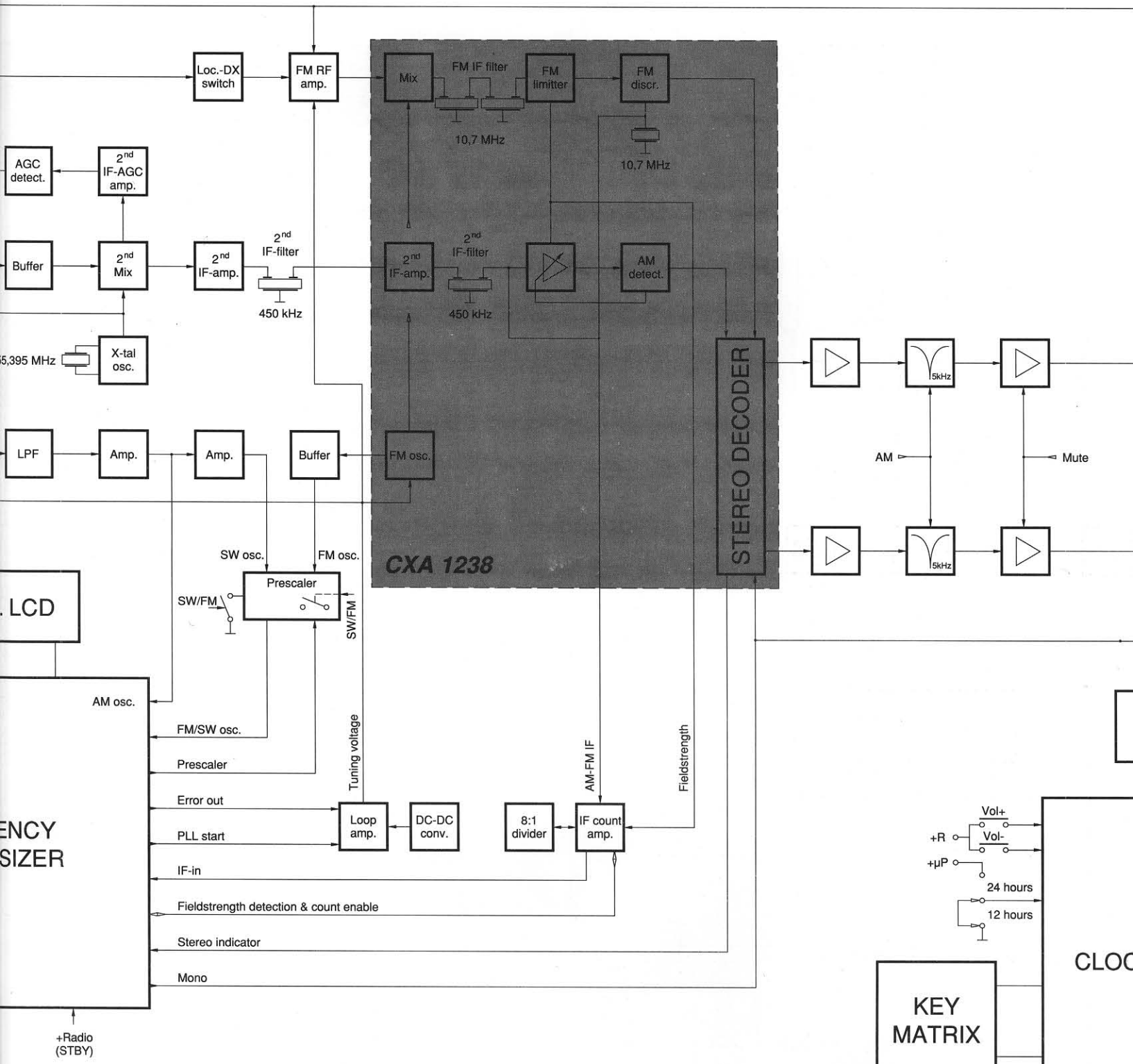
Loc.-DX switch
FM RF amp.
Mix
FM IF filter
FM limitter
FM discr.
10,7 MHz
10,7 MHz
AGC detect.
2nd IF-AGC amp.
Buffer
2nd Mix
2nd IF-amp.
2nd IF-filter
450 kHz
2nd IF-amp.
2nd IF-filter
450 kHz
AM detect.
X-tal osc.
LPF
Amp.
Amp.
Buffer
FM osc.
STEREO DECODER
5kHz
5kHz
AM
Mute
CXA 1238
SW osc.
FM osc.
Prescaler
SW/FM
SW/FM
LCD
AM osc.
FM/SW osc.
Prescaler
Tuning voltage
AM-FM IF
Fieldstrength
Error out
PLL start
IF-in
Loop amp.
DC-DC conv.
8:1 divider
IF count amp.
Fieldstrength detection & count enable
Stereo indicator
Mono
+Radio (STBY)
Vol+
Vol-
+R
+µP
24 hours
12 hours
KEY MATRIX

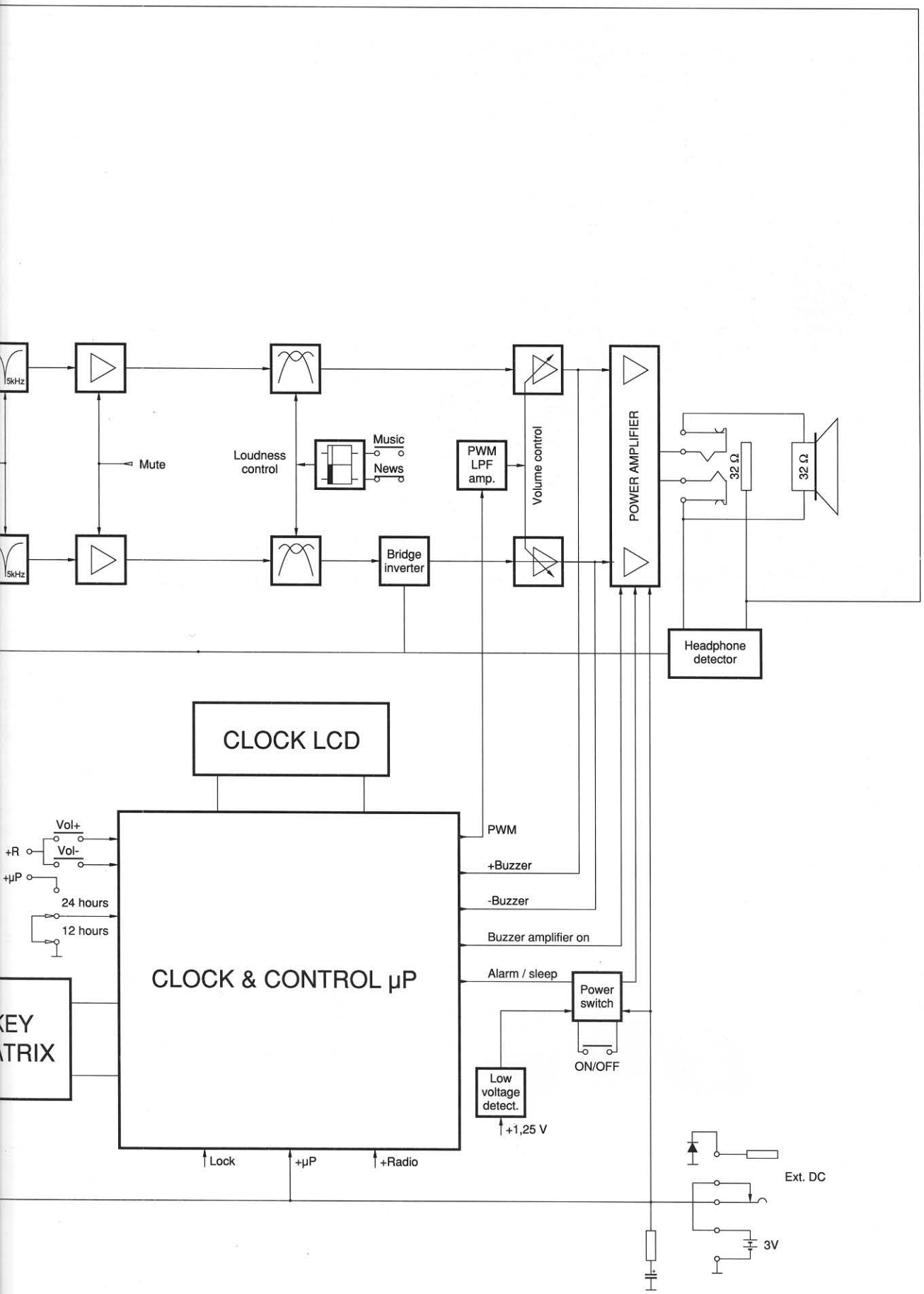
5kHz
5kHz
Mute
Loudness control
Music
News
PWM LPF amp.
Volume control
POWER AMPLIFIER
32 Ω
32 Ω
Bridge inverter
Headphone detector
CLOCK LCD
Vol+
Vol-
+R
+µP
24 hours
12 hours
CLOCK & CONTROL µP
PWM
+Buzzer
-Buzzer
Buzzer amplifier on
Alarm / sleep
Power switch
ON/OFF
Low voltage detect.
+1,25 V
Lock
+µP
+Radio
Ext. DC
3V

11	E 3	2193	C 4	3158	C 2	3220	D 3	6172	D 2
1250	A 4	2194	C 3	3159	C 2	3222	D 3	6210	D 3
1251	A 1	2195	C 3	3160	D 1	3223	E 3	6211	D 3
1253	A 2	2196	C 4	3161	D 2	3224	D 3	6281	B 3
1254	A 4	2197	D 3	3162	D 2	3225	D 3	6282	B 3
1255	A 3	2198	D 3	3163	D 2	3226	D 3	7120	C 2
1256	C 1	2199	D 3	3164	D 1	3227	D 3	7124	B 2
1257	B 2	2200	D 1	3165	D 2	3228	E 3	7125	B 2
1258	B 2	2205	D 4	3166	D 2	3244	C 1	7126	B 2
2131	B 1	2206	D 4	3167	D 2	3245	C 1	7129	C 3
2154	C 3	2207	B 3	3168	D 2	3246	C 2	7130	D 2
2157	D 2	2211	D 4	3169	D 2	3247	D 2	7131	D 1
2158	D 1	2212	D 3	3170	D 2	3248	B 3	7132	D 2
2159	D 1	2213	C 3	3171	D 2	3251	B 4	7136	D 1
2160	D 2	2214	D 3	3172	C 2	3252	B 4	7212	D 3
2161	D 2	2215	D 3	3173	C 2	3253	B 3	7213	D 3
2162	D 2	2216	B 3	3175	B 3	3254	B 3	7214	D 3
2163	D 2	2217	E 3	3176	B 3	3265	B 2	7251	B 4
2164	D 2	2218	D 3	3178	B 2	3281	A 2	7252	B 3
2165	D 2	2219	D 3	3179	B 2	3282	A 3	7283	B 4
2166	D 2	2220	D 3	3180	C 2	3292	B 3	7284	B 3
2167	D 2	2221	D 3	3181	E 3	3293	B 3		
2168	E 2	2222	D 3	3184	D 3	3294	A 3		
2169	D 2	2223	B 3	3185	D 3	3295	A 3		
2170	D 2	2251	B 4	3186	D 3	3296	A 3		
2171	D 2	2252	B 3	3187	D 3	3299	B 3		
2172	D 2	2255	B 2	3188	C 3	5103	E 2		
2173	C 2	2263	A 1	3189	C 3	5119	C 2		
2177	C 2	2281	B 2	3191	B 2	5124	C 2		
2179	B 2	2282	B 2	3192	C 3	5170	D 2		
2181	C 2	2285	A 3	3196	D 1	5180	C 2		
2182	C 2	2289	A 2	3197	D 1	5181	C 2		
2183	C 2	2291	A 2	3199	D 2	5182	C 3		
2184	C 2	2292	A 2	3205	D 4	5183	C 4		
2185	C 2	2293	A 3	3206	D 4	5184	B 3		
2186	C 3	2295	B 1	3210	D 4	5185	B 3		
2187	D 2	2296	B 1	3211	D 4	5186	D 2		
2188	B 4	2297	B 3	3215	C 3	6106	B 2		
2189	B 4	2298	B 3	3216	D 1	6107	C 2		
2190	C 3	2299	A 3	3217	D 3	6108	C 2		
2191	C 4	2300	A 3	3218	D 3	6170	D 2		
2192	C 3	3157	D 2	3219	D 3	6171	D 2		

TUNER BOARD / COPPERSIDE VIEW

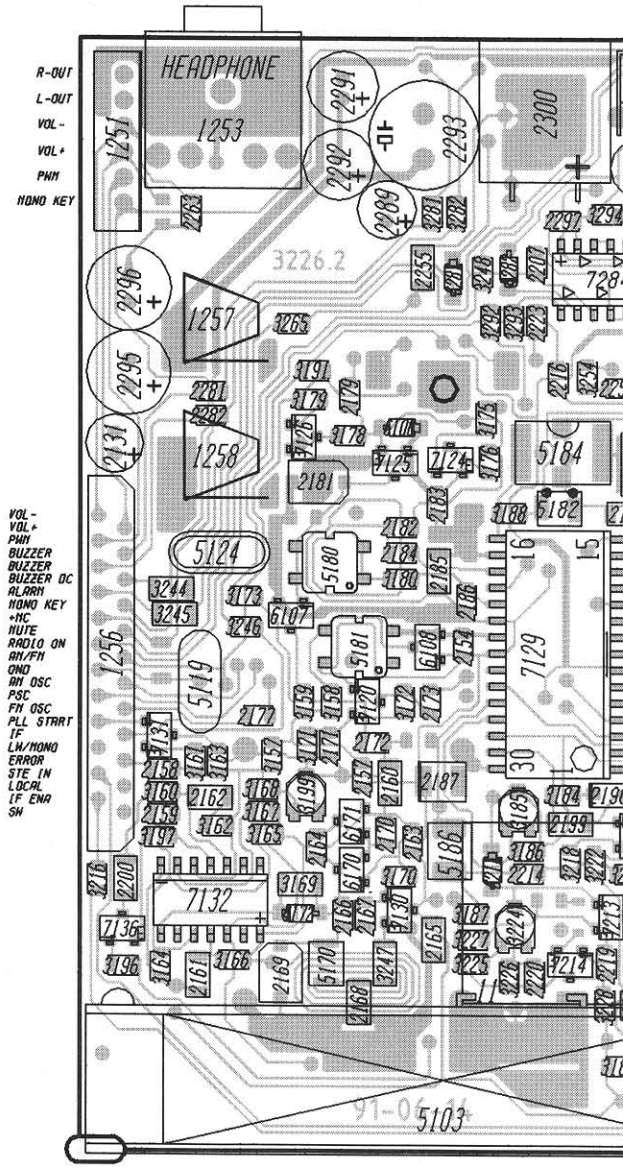

CAD-REF: PC.AE3905.P1.D2.AE3905.00.SERV-A

/ COPPERSIDE VIEW / AE3905

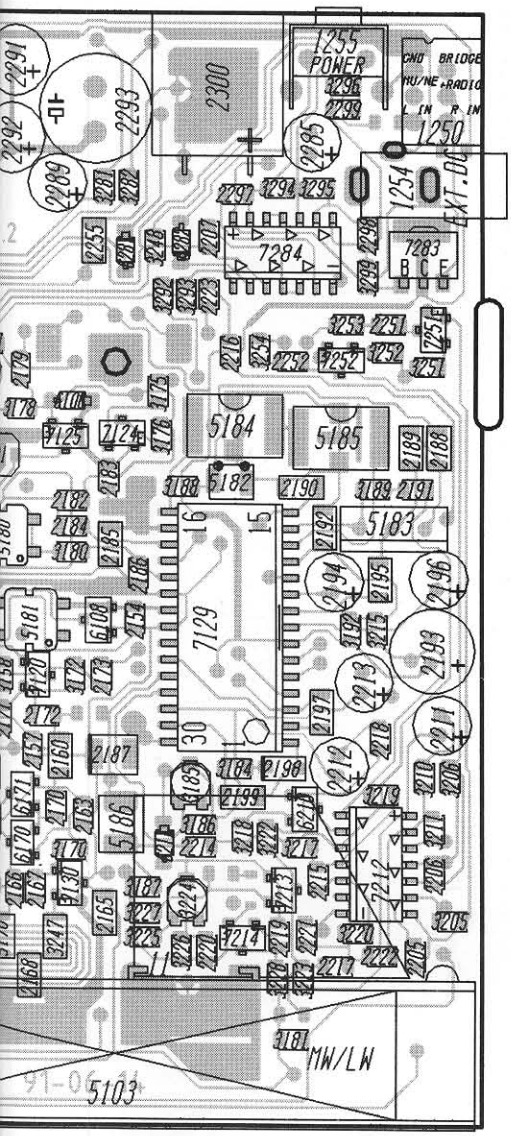

.P1.D2.AE3905.00.SERV-A / 91-07-11

TUNER BOARD / COMPONENTSIDE VIEW / AE

CAD-REF: PC.AE3905.P1.D2.AE3905.00.SERV-B / 91-07-11

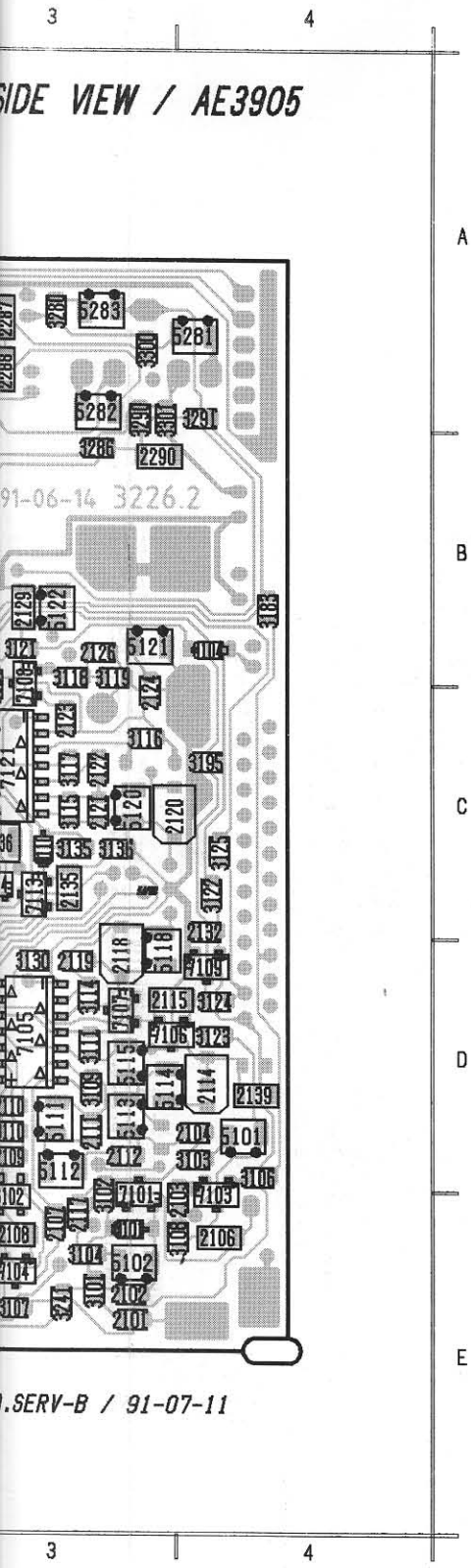

2101	E 3	2147	C 2	3117	C 3	3193	E 3	3288	A 3	7107	D 3
2102	E 3	2155	D 2	3118	B 3	3194	E 2	3289	A 1	7108	B 3
2103	E 4	2156	E 2	3119	B 3	3195	C 4	3290	A 3	7109	D 4
2104	D 4	2174	C 2	3120	C 3	3198	B 2	3291	A 4	7110	E 3
2105	E 1	2175	C 3	3121	B 3	3201	C 2	3297	A 2	7111	D 2
2106	E 4	2176	C 2	3122	C 4	3202	C 2	3300	A 3	7112	D 3
2107	E 3	2178	B 2	3123	D 4	3203	D 1	3301	A 3	7113	C 3
2108	E 3	2201	C 2	3124	D 4	3204	D 1	5101	D 4	7114	C 3
2109	D 3	2202	C 2	3125	C 4	3213	C 2	5102	E 3	7115	D 2
2110	D 3	2203	C 2	3126	C 2	3214	C 2	5111	D 3	7116	D 2
2111	D 3	2204	C 2	3127	C 3	3221	C 1	5112	D 3	7117	D 2
2112	D 3	2210	C 1	3128	B 3	3241	E 3	5113	D 3	7118	C 2
2114	D 4	2250	B 2	3129	C 2	3242	C 2	5114	D 3	7121	C 3
2115	D 3	2253	B 2	3130	D 3	3243	C 2	5115	D 3	7122	D 2
2116	D 2	2254	B 2	3131	D 3	3249	B 3	5117	D 3	7123	D 2
2117	E 3	2257	B 2	3132	D 3	3250	B 2	5118	D 3	7127	C 2
2118	D 3	2258	C 1	3133	D 2	3255	B 2	5120	C 3	7128	C 2
2119	D 3	2259	B 2	3134	C 3	3256	B 2	5121	B 3	7133	C 2
2120	C 3	2260	B 1	3135	C 3	3257	B 2	5122	B 3	7134	B 3
2121	C 3	2261	A 2	3136	C 3	3258	C 2	5123	B 2	7135	D 3
2122	C 3	2262	B 1	3137	D 2	3259	B 1	5140	D 2	7210	C 1
2123	C 3	2283	A 2	3138	D 2	3260	C 1	5141	E 2	7211	C 1
2124	C 3	2284	A 2	3139	D 2	3261	B 2	5142	D 2	7253	B 2
2125	C 2	2286	A 2	3140	D 2	3262	B 2	5281	A 4	7254	C 2
2126	B 3	2287	A 3	3141	D 2	3263	B 3	5282	A 3	7255	B 2
2127	C 3	2288	A 3	3143	E 2	3264	B 3	5283	A 3	7256	B 1
2129	B 3	2290	B 3	3144	D 2	3267	B 2	6101	E 3	7257	B 2
2130	C 3	3101	E 3	3145	E 2	3268	B 2	6102	E 3	7281	A 2
2132	C 4	3102	E 3	3146	E 2	3269	B 2	6104	B 4	7282	A 2
2133	E 2	3103	D 4	3147	E 2	3270	C 1	6105	D 2		
2134	D 3	3104	E 3	3148	D 1	3271	B 2	6109	D 2		
2135	C 3	3106	D 4	3149	D 2	3272	B 1	6110	C 3		
2136	C 3	3107	E 3	3150	D 1	3273	B 2	6111	D 2		
2137	D 2	3108	E 4	3152	C 2	3274	B 1	6213	C 1		
2138	D 2	3109	D 3	3153	D 2	3275	B 2	6250	A 2		
2139	D 4	3110	D 3	3154	D 2	3276	B 1	6283	A 2		
2140	D 2	3111	D 3	3155	E 2	3280	A 3	7101	E 3		
2141	E 2	3112	D 3	3156	E 2	3283	A 2	7102	E 3		
2142	E 2	3113	D 3	3174	C 3	3284	A 2	7103	E 4		
2143	D 1	3114	D 3	3182	C 2	3285	A 3	7104	E 3		
2144	E 2	3115	C 3	3183	B 4	3286	B 3	7105	D 3		
2146	C 2	3116	C 3	3190	B 2	3287	A 3	7106	D 3		

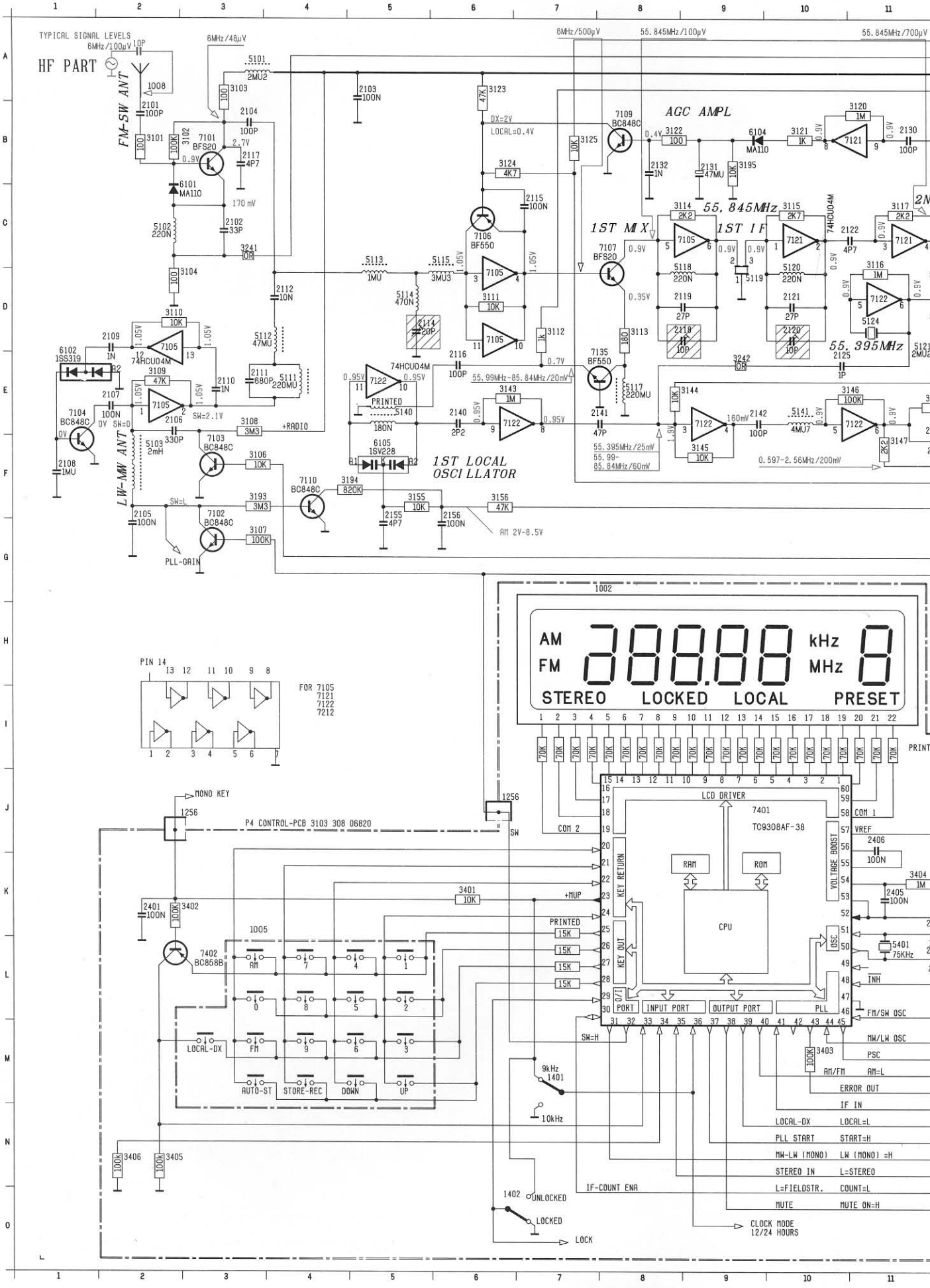

CAD-REF: ES.AE3905.P1.AE3905.00.SH1.D03 (91-09-10)

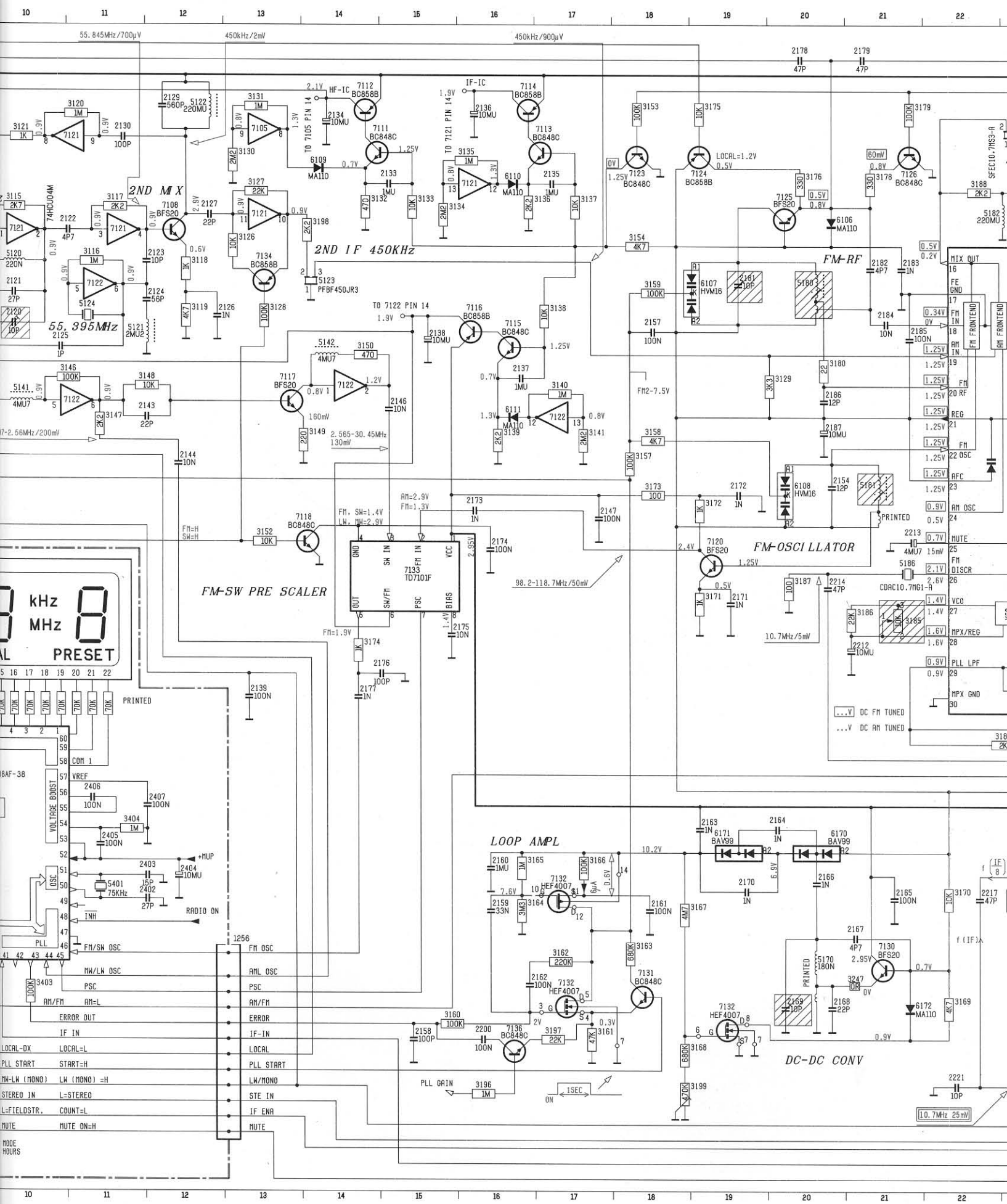
2ND MIX
2ND IF 450KHz
55.395MHz
FM-RF
FM-OSCILLATOR
FM-SW PRE SCALER
LOOP AMPL
DC-DC CONV
kHz
MHz
PRESET
PRINTED
COM 1
VREF
VOLTAGE BOOST
RADIO ON
FM/SW OSC
MW/LW OSC
PSC
AM/FM
ERROR OUT
IF IN
LOCAL-DX
PLL START
MW-LW (MONO)
STEREO IN
L=FIELDSTR.
MUTE
MODE
HOURS
FM OSC
AML OSC
ERROR
IF-IN
LOCAL
LW/MONO
STE IN
IF ENA
LOCAL=L
START=H
LW (MONO) =H
L=STEREO
COUNT=L
MUTE ON=H
PLL GAIN
DC FM TUNED
DC AM TUNED
MIX OUT
FE GND
FM IN
AM IN
FM RF
REG
FM OSC
AFC
AM OSC
MUTE
FM DISCR
VCO
MPX/REG
PLL LPF
MPX GND
FM FRONTEND
AM FRONTEND
55.845MHz/700µV
450kHz/2mV
450kHz/900µV
98.2-118.7MHz/50mV
10.7MHz/5mV
10.7MHz 25mV

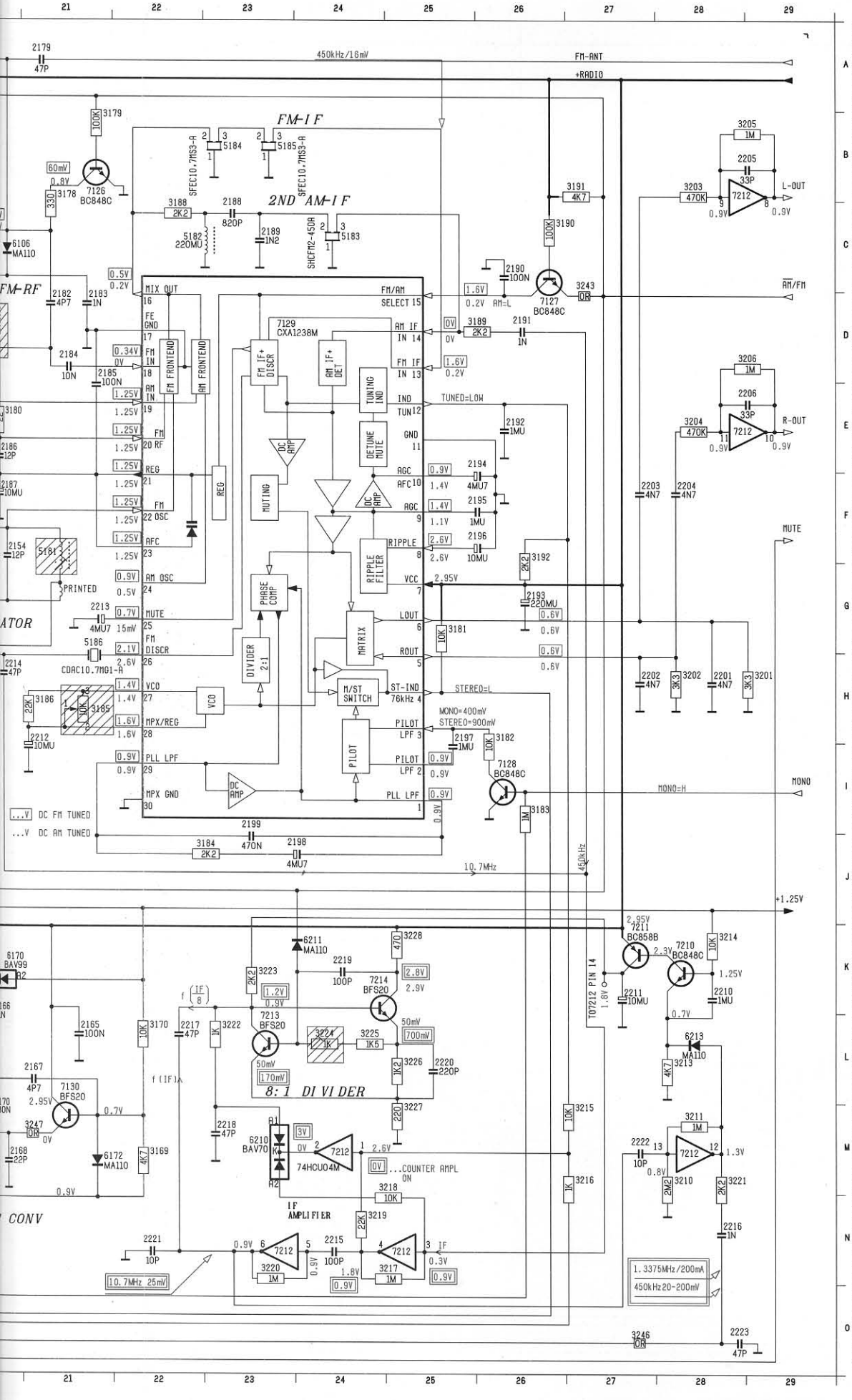

	1002	G 8	2407	J11	3243	C27	
	1005	K 3	3101	B 2	3246	O27	
	1008	A 2	3102	B 3	3247	M21	
A	1256	L13	3103	A 3	3401	K 6	
	1401	M 7	3104	D 2	3402	K 2	
	1402	O 6	3106	F 3	3403	M10	
	2101	B 2	3107	G 3	3404	K11	
	2102	C 3	3108	E 3	3405	N 2	
	2103	A 5	3109	E 2	3406	N 2	
	2104	B 3	3110	D 2	5101	A 3	
	2105	F 2	3111	D 6	5102	C 3	
	2106	E 2	3112	D 7	5103	F 2	
B	2107	E 2	3113	D 8	5111	E 4	
	2108	F 1	3114	C 9	5112	D 4	
	2109	D 2	3115	C10	5113	C 5	
	2110	E 3	3116	C11	5114	D 5	
	2111	E 3	3117	C11	5115	C 6	
	2112	D 4	3118	D12	5117	E 8	
	2114	D 5	3119	D12	5118	C 9	
	2115	C 7	3120	B11	5119	D 9	
C	2116	E 6	3121	B10	5120	C10	
	2117	B 3	3122	B 8	5121	D12	
	2118	D 9	3123	A 6	5122	B12	
	2119	D 9	3124	B 6	5123	D14	
	2120	D10	3125	B 7	5124	D11	
	2121	D10	3126	C13	5140	E 5	
	2122	C11	3127	C13	5141	E10	
	2123	C11	3128	D13	5142	E14	
D	2124	D11	3129	E20	5170	M20	
	2125	E10	3130	B13	5180	D20	
	2126	D12	3131	A13	5181	F21	
	2127	C12	3132	C14	5182	C23	
	2129	A12	3133	C15	5183	C24	
	2130	B11	3134	C15	5184	B23	
	2131	B 9	3135	B16	5185	B23	
	2132	B 8	3136	C16	5186	G21	
E	2133	B15	3137	C17	5401	L11	
	2134	B14	3138	D17	6101	B 2	
	2135	B17	3139	F16	6102	D 1	
	2136	B16	3140	E17	6104	B 9	
	2137	E16	3141	F17	6105	F 5	
	2138	D15	3143	E 6	6106	C20	
	2139	I13	3144	E 8	6107	D19	
	2140	E 6	3145	F 9	6108	F20	
F	2141	E 8	3146	E11	6109	B14	
	2142	E 9	3147	F11	6110	B16	
	2143	E12	3148	E12	6111	E16	
	2144	F12	3149	F14	6170	K20	
	2146	E15	3150	E14	6171	K19	
	2147	G17	3152	G13	6172	M21	
	2154	F20	3153	B18	6210	M23	
	2155	F 5	3154	C18	6211	K24	
G	2156	F 6	3155	F 5	6213	L28	
	2157	D18	3156	F 6	7101	B 3	
	2158	M15	3157	F18	7102	F 3	
	2159	L16	3158	F18	7103	F 3	
	2160	K16	3159	D18	7104	E 1	
	2161	L18	3160	M15	7105	D 2	
	2162	M16	3161	M17	7106	C 6	
	2163	K19	3162	L17	7107	C 8	
	2164	K20	3163	L18	7108	C12	
H	2165	L21	3164	L16	7109	B 8	
	2166	K20	3165	K16	7110	F 4	
	2167	L21	3166	K17	7111	B15	
	2168	M20	3167	L18	7112	A14	
	2169	M20	3168	N18	7113	B17	
	2170	L19	3169	M22	7114	A16	
	2171	H19	3170	L22	7115	D16	
	2172	F19	3171	H19	7116	D16	
I	2173	G16	3172	G19	7117	E13	
	2174	G16	3173	F18	7118	G14	
	2175	H15	3174	H14	7120	G19	
	2176	I15	3175	B19	7121	C10	
	2177	I14	3176	B20	7122	E 5	
	2178	A20	3178	B21	7123	B18	
	2179	A21	3179	B21	7124	B19	
	2181	D19	3180	E20	7125	C20	
J	2182	D21	3181	G25	7126	B21	
	2183	D21	3182	H26	7127	D26	
	2184	D21	3183	I26	7128	I26	
	2185	D21	3184	J23	7129	D23	
	2186	E20	3185	H21	7130	L21	
	2187	F20	3186	H21	7131	M18	
	2188	C23	3187	H20	7132	K17	
	2189	C23	3188	C22	7133	H15	
K	2190	C26	3189	D26	7134	C13	
	2191	D26	3190	C26	7135	D 8	
	2192	E26	3191	B27	7136	M16	
	2193	G26	3192	F26	7210	K28	
	2194	E26	3193	F 3	7211	K27	
	2195	F26	3194	F 5	7212	M24	
	2196	F26	3195	B 9	7213	L23	
	2197	H25	3196	N16	7214	K24	
L	2198	J24	3197	M17	7401	J 9	
	2199	I23	3198	C14	7402	L 3	
	2200	M16	3199	N18			
	2201	H28	3201	H29			
	2202	H27	3202	H28			
	2203	F27	3203	B28			
	2204	F28	3204	E28			
	2205	B29	3205	B29			
	2206	E29	3206	D29			
M	2210	K28	3210	M28			
	2211	K27	3211	M28			
	2212	H21	3213	L28			
	2213	G21	3214	K28			
	2214	H20	3215	M27			
	2215	N24	3216	M27			
	2216	N28	3217	N25			
	2217	L22	3218	M25			
N	2218	M23	3219	N24			
	2219	K24	3220	N23			
	2220	L25	3221	M28			
	2221	N22	3222	L23			
	2222	M27	3223	K23			
	2223	O28	3224	L24			
	2401	K 2	3225	L24			
	2402	L12	3226	L25			
O	2403	K12	3227	M25			
	2404	K12	3228	K25			
	2405	K11	3241	C 3			
	2406	J11	3242	E 9			

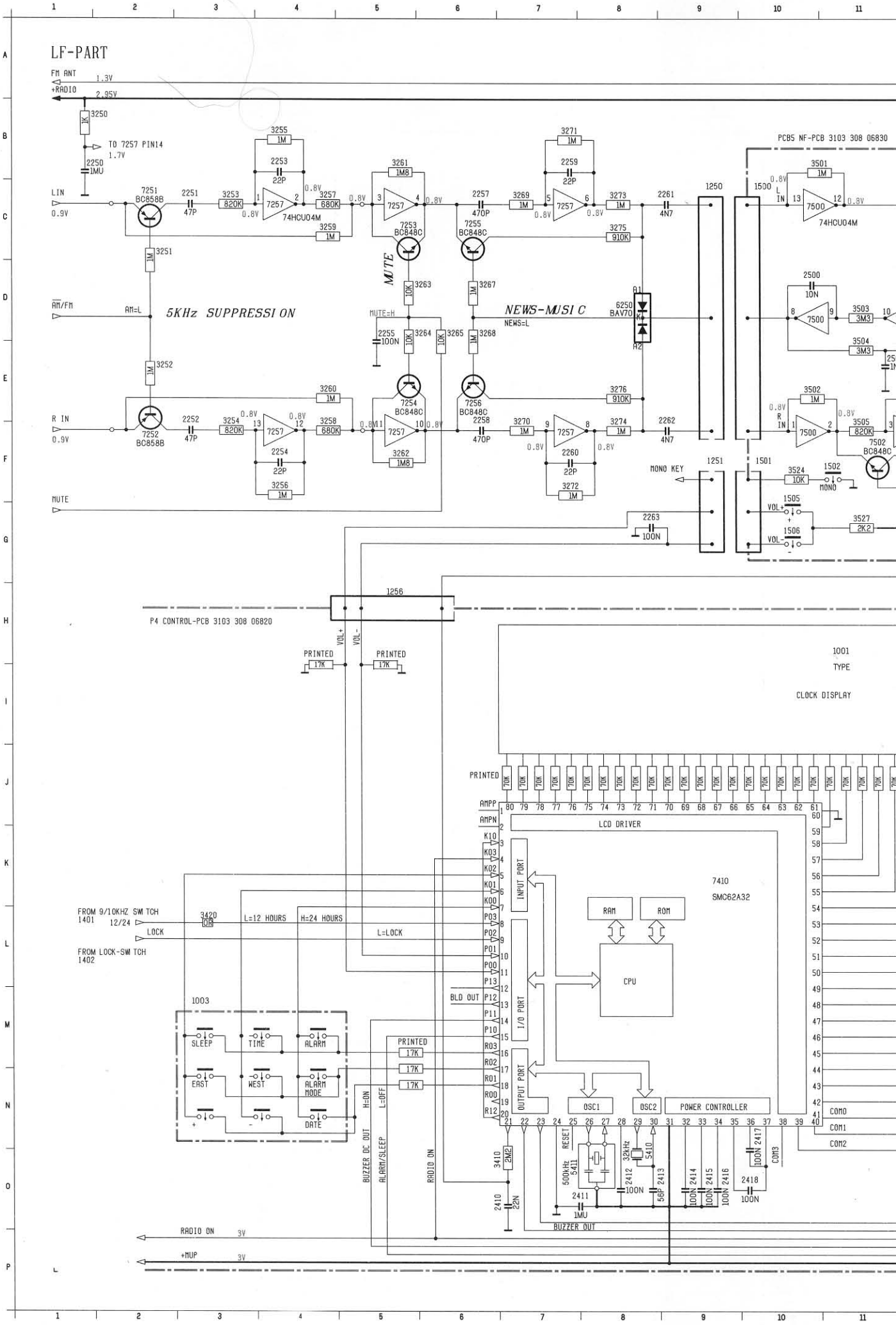
LF-PART
FM ANT
+RADIO
1.3V
2.95V
TO 7257 PIN14
1.7V
LIN
0.9V
R IN
0.9V
AM/FM
AM=L
5KHz SUPPRESSION
MUTE
MUTE=H
NEWS-MUSIC
NEWS=L
74HCU04M
MONO KEY
PCB5 NF-PCB 3103 308 06830
P4 CONTROL-PCB 3103 308 06820
PRINTED
VOL+
VOL-
1001
TYPE
CLOCK DISPLAY
LCD DRIVER
7410
SMC62A32
RAM
ROM
CPU
INPUT PORT
I/O PORT
OUTPUT PORT
OSC1
OSC2
POWER CONTROLLER
FROM 9/10KHZ SW TCH
1401
12/24
LOCK
FROM LOCK-SW TCH
1402
L=12 HOURS
H=24 HOURS
L=LOCK
BLD OUT
1003
SLEEP
TIME
ALARM
EAST
WEST
ALARM MODE
DATE
BUZZER DC OUT
H=ON
L=OFF
ALARM/SLEEP
RADIO ON
BUZZER OUT
RESET
COM0
COM1
COM2
COM3
RADIO ON
+MUP

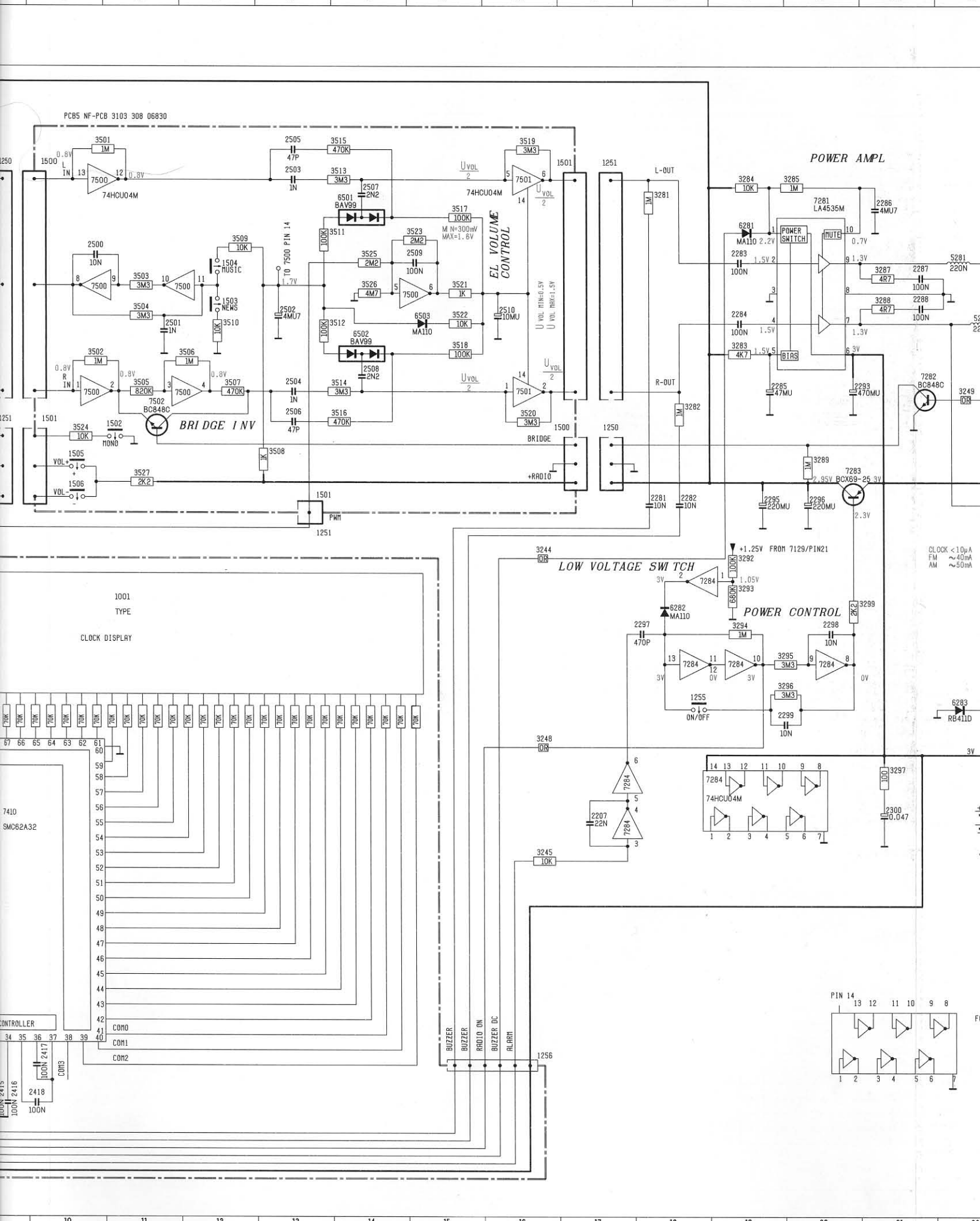
PCB5 NF-PCB 3103 308 06830
POWER AMPL
EL VOLUME CONTROL
BRIDGE INV
LOW VOLTAGE SWITCH
POWER CONTROL
74HCU04M
7500
7501
7281 LA4535M
POWER SWITCH
MUTE
BIAS
MA110
BAV99
BC848C
BCX69-25
RB411D
L-OUT
R-OUT
BRIDGE
+RADIO
PWM
MONO
MUSIC
NEWS
VOL+
VOL-
ON/OFF
+1.25V FROM 7129/PIN21
CLOCK <10µA
FM ~40mA
AM ~50mA
1001
TYPE
CLOCK DISPLAY
7410
SMC62A32
CONTROLLER
COM0
COM1
COM2
COM3
BUZZER
RADIO ON
BUZZER DC
ALARM
PIN 14

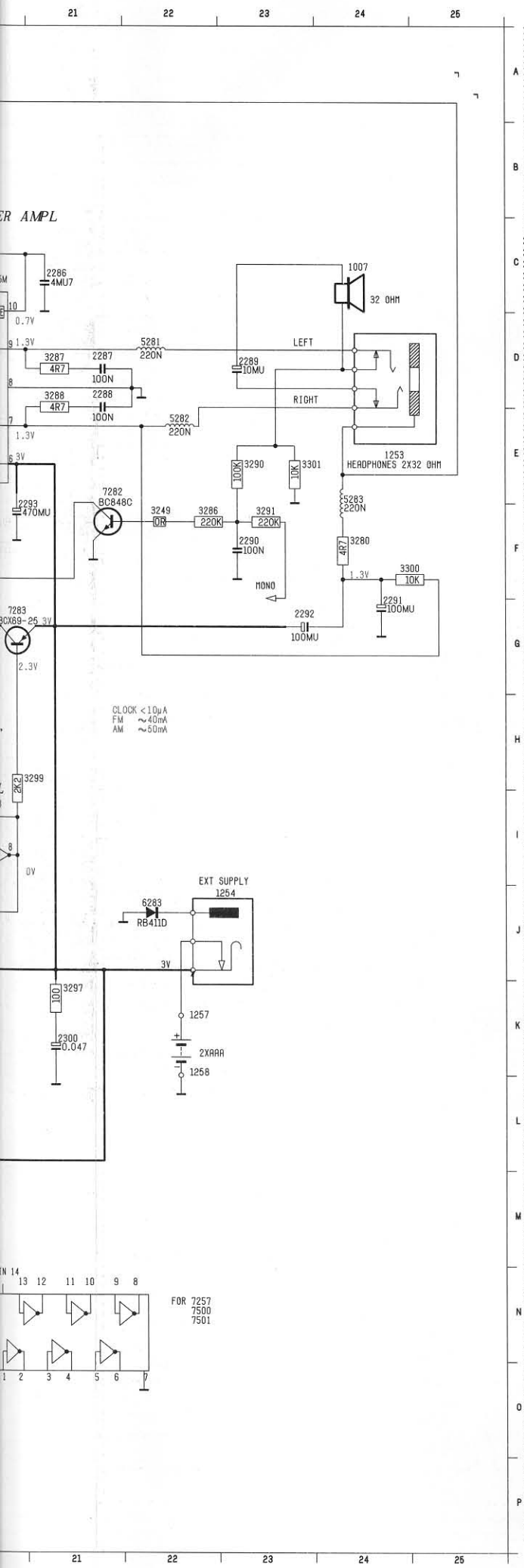

	1001	H11	3507	E12
	1003	M 3	3508	F13
	1007	C24	3509	D12
A	1250	C 9	3510	E12
	1251	C17	3511	C13
	1253	E24	3512	E13
	1254	J22	3513	C14
	1255	J18	3514	E14
	1256	H 5	3515	B14
	1257	K22	3516	F14
	1258	K22	3517	C15
	1500	C10	3518	E15
B	1501	C16	3519	B16
	1502	F10	3520	F16
	1503	D12	3521	D15
	1504	D12	3522	E15
	1505	F10	3523	C15
	1506	G10	3524	F10
	2207	K17	3525	D14
	2250	B 1	3526	D14
C	2251	C 3	3527	G11
	2252	E 3	5281	D22
	2253	B 4	5282	E22
	2254	F 4	5283	E24
	2255	D 5	5410	O 8
	2257	C 6	5411	O 7
	2258	E 6	6250	D 8
	2259	B 7	6281	C19
D	2260	F 7	6282	H18
	2261	C 9	6283	J22
	2262	E 9	6501	C14
	2263	G 8	6502	E14
	2281	G18	6503	E15
	2282	G18	7251	C 2
	2283	D19	7252	F 2
	2284	E19	7253	C 5
E	2285	F19	7254	E 5
	2286	C21	7255	C 6
	2287	D21	7256	E 6
	2288	D21	7257	C 4
	2289	D23	7281	C20
	2290	F23	7282	E21
	2291	G24	7283	G20
	2292	G23	7284	K18
F	2293	F20	7410	K 9
	2295	G19	7500	C10
	2296	G20	7501	C16
	2297	I18	7502	F11
	2298	I20		
	2299	J20		
	2300	K21		
	2410	O 6		
G	2411	O 8		
	2412	O 8		
	2413	O 8		
	2414	O 9		
	2415	O 9		
	2416	O 9		
	2417	O10		
	2418	O10		
	2500	D10		
H	2501	E11		
	2502	E13		
	2503	C13		
	2504	E13		
	2505	B13		
	2506	F13		
	2507	C14		
	2508	E14		
I	2509	D15		
	2510	E16		
	3244	H16		
	3245	L16		
	3248	J16		
	3249	F22		
	3250	B 1		
	3251	C 2		
J	3252	E 2		
	3253	C 3		
	3254	E 3		
	3255	B 4		
	3256	F 4		
	3257	C 4		
	3258	E 4		
	3259	C 4		
K	3260	E 4		
	3261	B 5		
	3262	F 5		
	3263	D 5		
	3264	D 5		
	3265	D 6		
	3267	D 6		
	3268	D 6		
L	3269	C 7		
	3270	E 7		
	3271	B 7		
	3272	F 7		
	3273	C 8		
	3274	E 8		
	3275	C 8		
	3276	E 8		
M	3280	F24		
	3281	C18		
	3282	F18		
	3283	E19		
	3284	C19		
	3285	C20		
	3286	F22		
	3287	D21		
N	3288	D21		
	3289	F20		
	3290	E23		
	3291	F23		
	3292	H19		
	3293	H19		
	3294	I19		
	3295	I20		
	3296	I20		
O	3297	K21		
	3299	H20		
	3300	F25		
	3301	E23		
	3410	O 6		
	3420	L 3		
	3501	B11		
	3502	E10		
P	3503	D11		
	3504	D11		
	3505	E11		
	3506	E12		

		2504	A 2	3503	B 3	3515	A 2	7502	A 4
1500	B 4	2505	A 2	3504	B 3	3516	A 2		
1501	A 1	2506	A 2	3505	A 4	3522	B 2		
1505	B 3	2509	A 3	3506	A 3	3523	A 3		
1506	B 2	2510	B 2	3507	A 3	6503	A 2		
2500	B 3	3501	B 3	3513	A 1	7500	B 3		
2503	A 1	3502	A 4	3514	A 2	7501	B 2		

LF BOARD / COMPONENTSIDE VIEW / AE3905

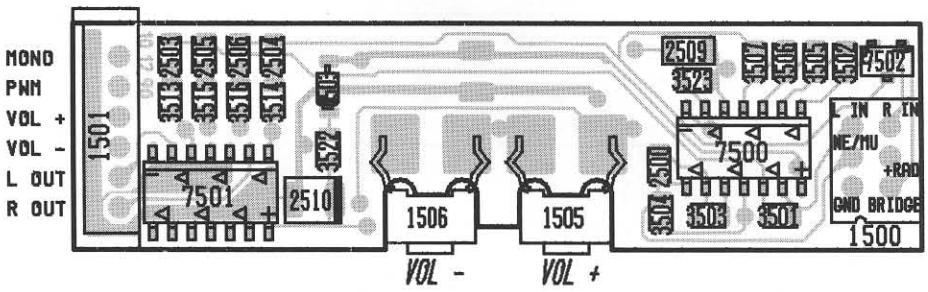

CAD-REF: PC.AE3905.P5.D1.AE3905.00.SERV-B / 91-07-18

LF BOARD / COPPERSIDE VIEW / AE3905

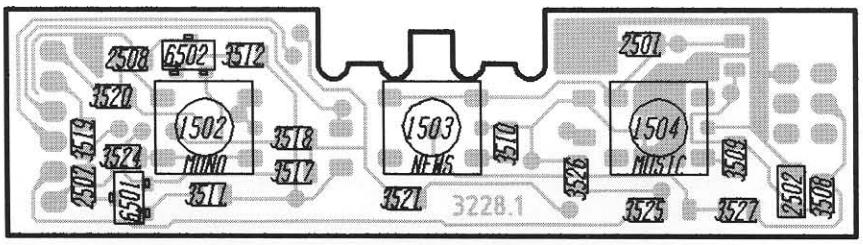

CAD-REF: PC.AE3905.P5.D1.AE3905.00.SERV-A / 91-07-18

1502	B 2	2502	B 4	3509	B 4	3517	B 2	3521	B 2	3527	B 4
1503	B 3	2507	B 1	3510	B 3	3518	B 2	3524	B 1	6501	B 2
1504	B 3	2508	A 2	3511	B 2	3519	B 1	3525	B 3	6502	A 2
2501	A 3	3508	B 4	3512	A 2	3520	A 1	3526	B 3		

CONTROL BOARD / COMPONENTSIDE VIEW / AE3905

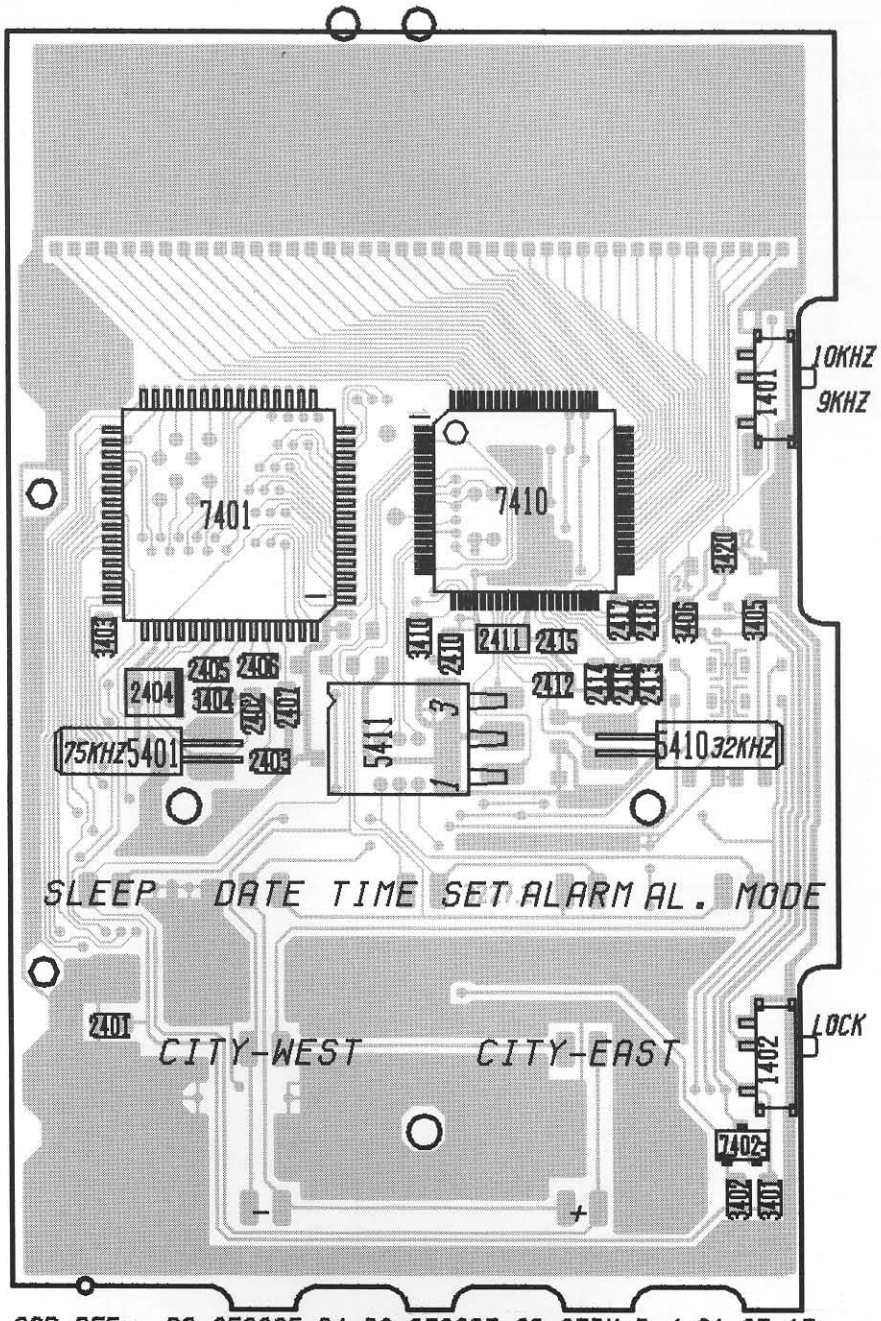

1401	B	4
1402	D	4
2401	D	1
2402	C	2
2403	C	2
2404	C	2
2405	C	2
2406	C	2
2407	C	2
2410	C	3
2411	C	3
2412	C	3
2413	C	3
2414	C	3
2415	C	3
2416	C	3
2417	C	3
2418	C	3
3401	E	4
3402	E	4
3403	C	1
3404	C	2
3405	C	4
3406	C	3
3410	C	2
3420	C	3
5401	C	2
5410	C	3
5411	C	2
7401	B	2
7402	E	4
7410	B	3

Adjustment & Test Instruction

Adjust / Test	Mode	Display	Input signal	Signal injection	Output signal	Measuring poi
Radio LCD	Radio	all segments	+3,0 V	Battery or ext. DC	Radio display	-
Clock LCD	-				Clock display	-
Buzzer on	Clock				Loudspeaker	-
Sleep / Alarm		-			Radio display	-
Stand by		Time		ext. DC	-	ext. DC socket
DC - DC Converter	FM	108 MHz		Battery or ext. DC	84,0 MHz / 25 mV at 50 Ω	Collector 7130
		108 MHz			10 V	Pin 14 of 7132
FM OSC		108 MHz			7,5 V ± 0,2 V	Pin 5 or 12 of 713
		87,5 MHz			2,0 V ± 0,2 V	
FM RF		108 MHz	sweep 500 kHz approx. 3 µV	Telescopic aerial connection Source = 50 Ω	≈400 mV	Pin 8 or 10 of 721
		87,5 MHz				
MPX - VCO		108 MHz	CW 1 mV		75 kHz / 100 mVpp	Pin 4 of 7129
FM IF 8:1 Divider		108 MHz	1 mV / 1 kHz Δf = 180 kHz		400 mV, 748 ns	2223
Search sensitivity		107 MHz	5 µV / 1 kHz Δf = 22,5 kHz			-
Local DX		107 MHz	5 µV / 100 µV 1 kHz		1 kHz AF	Headphones
AM 1st Osc.	AM	29995 kHz	-	Battery or ext. DC	8,0 V - 8,5 V DC	Pin 5 or 12 of 713
		147 kHz	-		2,0 V - 2,5 V DC	
PLL - Start		147 kHz	-		2 V → 0,5 V → 2 V DC	
Tuning Voltage Limiter		147 kHz	-		approx. 4 V DC	
1st AM IF		29995 kHz	Sweepsignal Level: 100 mV Frequ: 55,845 MHz Span : 60 kHz	Telescopic aerial connection Source = 50 Ω	≈300mV	Pin 8 of 7121 with 1 MΩ probe
1st IF Trap						
Search sensitivity		29000 kHz	10 µV / 29 MHz 30% AM		LCD, Loudspeaker	-
Local DX		29000 kHz	100 µV	-	LCD, Loudspeaker	-
5 kHz suppression	FM	108 MHz	1 mV / 5 kHz Δf = 22,5 kHz	Telescopic aerial connection	5 kHz AF	Headphone
Low voltage shut off	FM	108 MHz	< 2,2 V	Battery	-	-
			< 2,6 V	ext. DC	-	-

signal	Measuring point	Adjust	Remarks
splay	-	-	Press any RADIO key before connecting supply voltage
splay	-	-	press WEST, EAST, MODE at same time
aker	-	-	press WEST, EAST, MODE at same time - buzzer is beeping
splay	-	-	Press sleep → Radio is switched on
	ext. DC socket	-	Current should be less than 10 µA
mV at 50 Ω	Collector 7130	2169	Adjust to 84 MHz ± 500 kHz
	Pin 14 of 7132	3199	Adjust to 10 V - 10,5 V
),2 V	Pin 5 or 12 of 7132	5181	If PLL not locked → AF outputsignal is muted!
),2 V		check only	If PLL not locked → AF outputsignal is muted!
≈400 mV	Pin 8 or 10 of 7212	2181	max S-curve Any connection on HEADPHONE socket influences the FM signal
		5180	max S-curve
0 mVpp	Pin 4 of 7129	3185	Adjust to 76 kHz ± 500 Hz
400 mV	2223	3224	Shortcircuit pin 1 of 7212 to GND to switch on counter amplifier. Adjust to a single curve with a frequency of 1,3375 MHz.
	-	-	Stop at 107,0 MHz
AF	Headphones	-	For LOCAL increase inputsignal to 100 µV for same volume.
V DC	Pin 5 or 12 of 7132	-	If PLL not locked → AF outputsignal is muted!
V DC		-	If PLL not locked → AF outputsignal is muted!
→ 2 V DC		-	Shortcircuit tuning voltage for a moment to GND → set will be muted until power is switched off/on. **ATTENTION: Whenever the AM PLL is unlocked the PLL start has to be activated by switching POWER off/on or FM/AM !!**
V DC		-	Shortcircuit "ERROR OUT" Signal Pin 3 of 7132 to GND.
≈300mV	Pin 8 of 7121 with 1 MΩ probe		To avoid influence of IF suppression connect a resistor 1 kΩ over resonant circuit 2129/5122. **ATTENTION: Totaly mismatched quartzfilter can cause oscillating of 1st IF Amplifier.**
		2114	Disadjust IF-Trap for max outputsignal
		2120	Adjust to max amplitude and min ripple
		2118	Adjust to max amplitude and min ripple repeat
		2114	Adjust to min. amplitude (1st IF Rejection)
speaker	-	-	Stop at 29 000 kHz
speaker	-	-	For LOCAL increase inputsignal to 100 µV for same volume
AF	Headphone	-	Shortcircuit Collector - Emitter of 7251, 7252 → 5 kHz will be reduced more than 20 dB
	-	-	Radio is switched off automatically
	-	-	Radio is switched off automatically

11	E 3	2193	C 4	3158	C 2	3220	D 3	6172	D 2
1250	A 4	2194	C 3	3159	C 2	3222	D 3	6210	D 3
1251	A 1	2195	C 3	3160	D 1	3223	E 3	6211	D 3
1253	A 2	2196	C 4	3161	D 2	3224	D 3	6281	B 3
1254	A 4	2197	D 3	3162	D 2	3225	D 3	6282	B 3
1255	A 3	2198	D 3	3163	D 2	3226	D 3	7120	C 2
1256	C 1	2199	D 3	3164	D 1	3227	D 3	7124	B 2
1257	B 2	2200	D 1	3165	D 2	3228	E 3	7125	B 2
1258	B 2	2205	D 4	3166	D 2	3244	C 1	7126	B 2
2131	B 1	2206	D 4	3167	D 2	3245	C 1	7129	C 3
2154	C 3	2207	B 3	3168	D 2	3246	C 2	7130	D 2
2157	D 2	2211	D 4	3169	D 2	3247	D 2	7131	D 1
2158	D 1	2212	D 3	3170	D 2	3248	B 3	7132	D 2
2159	D 1	2213	C 3	3171	D 2	3251	B 4	7136	D 1
2160	D 2	2214	D 3	3172	C 2	3252	B 4	7212	D 3
2161	D 2	2215	D 3	3173	C 2	3253	B 3	7213	D 3
2162	D 2	2216	B 3	3175	B 3	3254	B 3	7214	D 3
2163	D 2	2217	E 3	3176	B 3	3265	B 2	7251	B 4
2164	D 2	2218	D 3	3178	B 2	3281	A 2	7252	B 3
2165	D 2	2219	D 3	3179	B 2	3282	A 3	7283	B 4
2166	D 2	2220	D 3	3180	C 2	3292	B 3	7284	B 3
2167	D 2	2221	D 3	3181	E 3	3293	B 3		
2168	E 2	2222	D 3	3184	D 3	3294	A 3		
2169	D 2	2223	B 3	3185	D 3	3295	A 3		
2170	D 2	2251	B 4	3186	D 3	3296	A 3		
2171	D 2	2252	B 3	3187	D 3	3299	B 3		
2172	D 2	2255	B 2	3188	C 3	5103	E 2		
2173	C 2	2263	A 1	3189	C 3	5119	C 2		
2177	C 2	2281	B 2	3191	B 2	5124	C 2		
2179	B 2	2282	B 2	3192	C 3	5170	D 2		
2181	C 2	2285	A 3	3196	D 1	5180	C 2		
2182	C 2	2289	A 2	3197	D 1	5181	C 2		
2183	C 2	2291	A 2	3199	D 2	5182	C 3		
2184	C 2	2292	A 2	3205	D 4	5183	C 4		
2185	C 2	2293	A 3	3206	D 4	5184	B 3		
2186	C 3	2295	B 1	3210	D 4	5185	B 3		
2187	D 2	2296	B 1	3211	D 4	5186	D 2		
2188	B 4	2297	B 3	3215	C 3	6106	B 2		
2189	B 4	2298	B 3	3216	D 1	6107	C 2		
2190	C 3	2299	A 3	3217	D 3	6108	C 2		
2191	C 4	2300	A 3	3218	D 3	6170	D 2		
2192	C 3	3157	D 2	3219	D 3	6171	D 2		

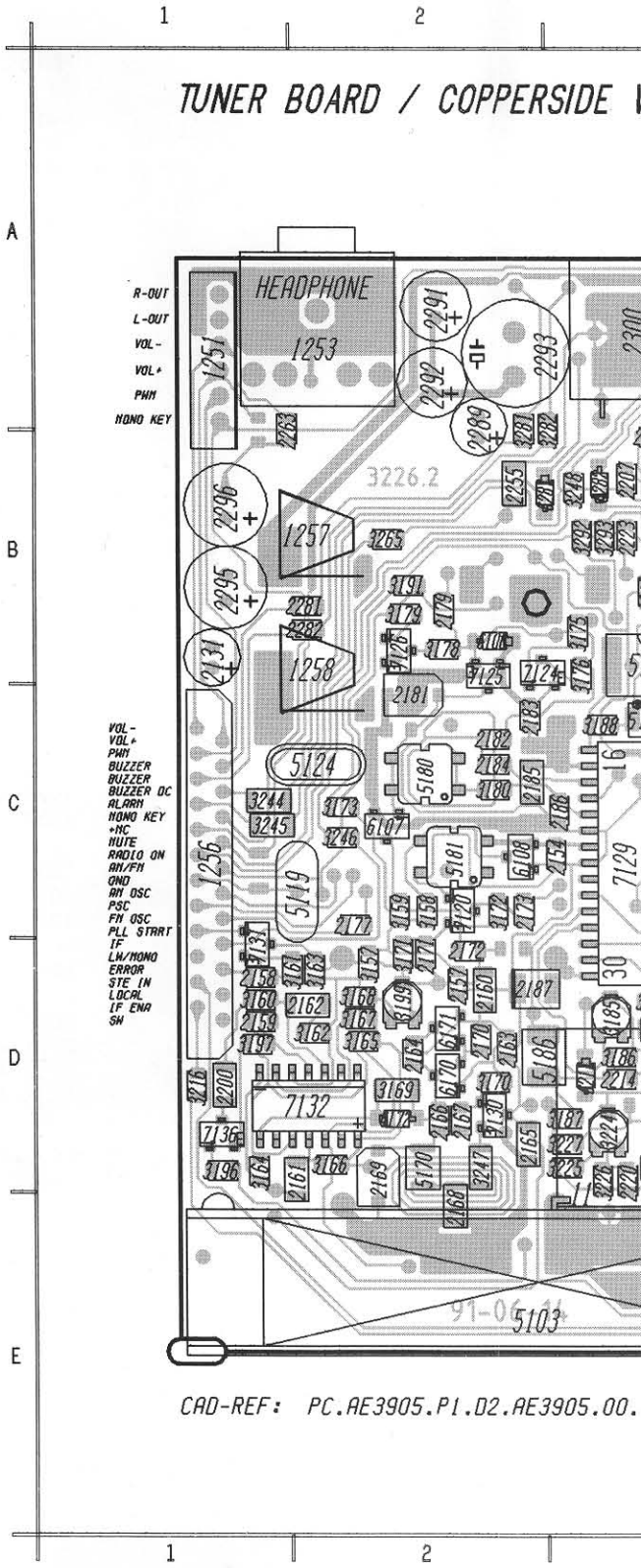

/ COPPERSIDE VIEW / AE3905

05.P1.D2.AE3905.00.SERV-A / 91-07-11

TUNER BOARD / COMPONENTSIDE VIEW / AE

CAD-REF: PC.AE3905.P1.D2.AE3905.00.SERV-B / 91-07-11

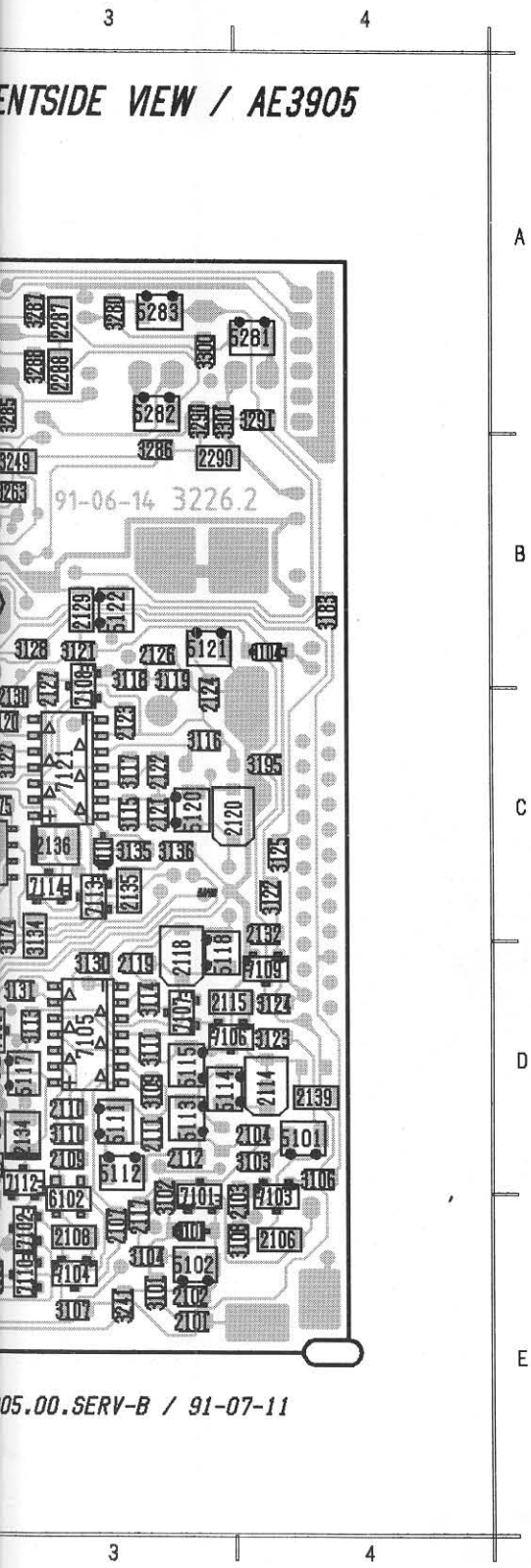

2101	E 3	2147	C 2	3117	C 3	3193	E 3	3288	A 3	7107	D 3
2102	E 3	2155	D 2	3118	B 3	3194	E 2	3289	A 1	7108	B 3
2103	E 4	2156	E 2	3119	B 3	3195	C 4	3290	A 3	7109	D 4
2104	D 4	2174	C 2	3120	C 3	3198	B 2	3291	A 4	7110	E 3
2105	E 1	2175	C 3	3121	B 3	3201	C 2	3297	A 2	7111	D 2
2106	E 4	2176	C 2	3122	C 4	3202	C 2	3300	A 3	7112	D 3
2107	E 3	2178	B 2	3123	D 4	3203	D 1	3301	A 3	7113	C 3
2108	E 3	2201	C 2	3124	D 4	3204	D 1	5101	D 4	7114	C 3
2109	D 3	2202	C 2	3125	C 4	3213	C 2	5102	E 3	7115	D 2
2110	D 3	2203	C 2	3126	C 2	3214	C 2	5111	D 3	7116	D 2
2111	D 3	2204	C 2	3127	C 3	3221	C 1	5112	D 3	7117	D 2
2112	D 3	2210	C 1	3128	B 3	3241	E 3	5113	D 3	7118	C 2
2114	D 4	2250	B 2	3129	C 2	3242	C 2	5114	D 3	7121	C 3
2115	D 3	2253	B 2	3130	D 3	3243	C 2	5115	D 3	7122	D 2
2116	D 2	2254	B 2	3131	D 3	3249	B 3	5117	D 3	7123	D 2
2117	E 3	2257	B 2	3132	D 3	3250	B 2	5118	D 3	7127	C 2
2118	D 3	2258	C 1	3133	D 2	3255	B 2	5120	C 3	7128	C 2
2119	D 3	2259	B 2	3134	C 3	3256	B 2	5121	B 3	7133	C 2
2120	C 3	2260	B 1	3135	C 3	3257	B 2	5122	B 3	7134	B 3
2121	C 3	2261	A 2	3136	C 3	3258	C 2	5123	B 2	7135	D 3
2122	C 3	2262	B 1	3137	D 2	3259	B 1	5140	D 2	7210	C 1
2123	C 3	2283	A 2	3138	D 2	3260	C 1	5141	E 2	7211	C 1
2124	C 3	2284	A 2	3139	D 2	3261	B 2	5142	D 2	7253	B 2
2125	C 2	2286	A 2	3140	D 2	3262	B 2	5281	A 4	7254	C 2
2126	B 3	2287	A 3	3141	D 2	3263	B 3	5282	A 3	7255	B 2
2127	C 3	2288	A 3	3143	E 2	3264	B 3	5283	A 3	7256	B 1
2129	B 3	2290	B 3	3144	D 2	3267	B 2	6101	E 3	7257	B 2
2130	C 3	3101	E 3	3145	E 2	3268	B 2	6102	E 3	7281	A 2
2132	C 4	3102	E 3	3146	E 2	3269	B 2	6104	B 4	7282	A 2
2133	E 2	3103	D 4	3147	E 2	3270	C 1	6105	D 2		
2134	D 3	3104	E 3	3148	D 1	3271	B 2	6109	D 2		
2135	C 3	3106	D 4	3149	D 2	3272	B 1	6110	C 3		
2136	C 3	3107	E 3	3150	D 1	3273	B 2	6111	D 2		
2137	D 2	3108	E 4	3152	C 2	3274	B 1	6213	C 1		
2138	D 2	3109	D 3	3153	D 2	3275	B 2	6250	A 2		
2139	D 4	3110	D 3	3154	D 2	3276	B 1	6283	A 2		
2140	D 2	3111	D 3	3155	E 2	3280	A 3	7101	E 3		
2141	E 2	3112	D 3	3156	E 2	3283	A 2	7102	E 3		
2142	E 2	3113	D 3	3174	C 3	3284	A 2	7103	E 4		
2143	D 1	3114	D 3	3182	C 2	3285	A 3	7104	E 3		
2144	E 2	3115	C 3	3183	B 4	3286	B 3	7105	D 3		
2146	C 2	3116	C 3	3190	B 2	3287	A 3	7106	D 3		

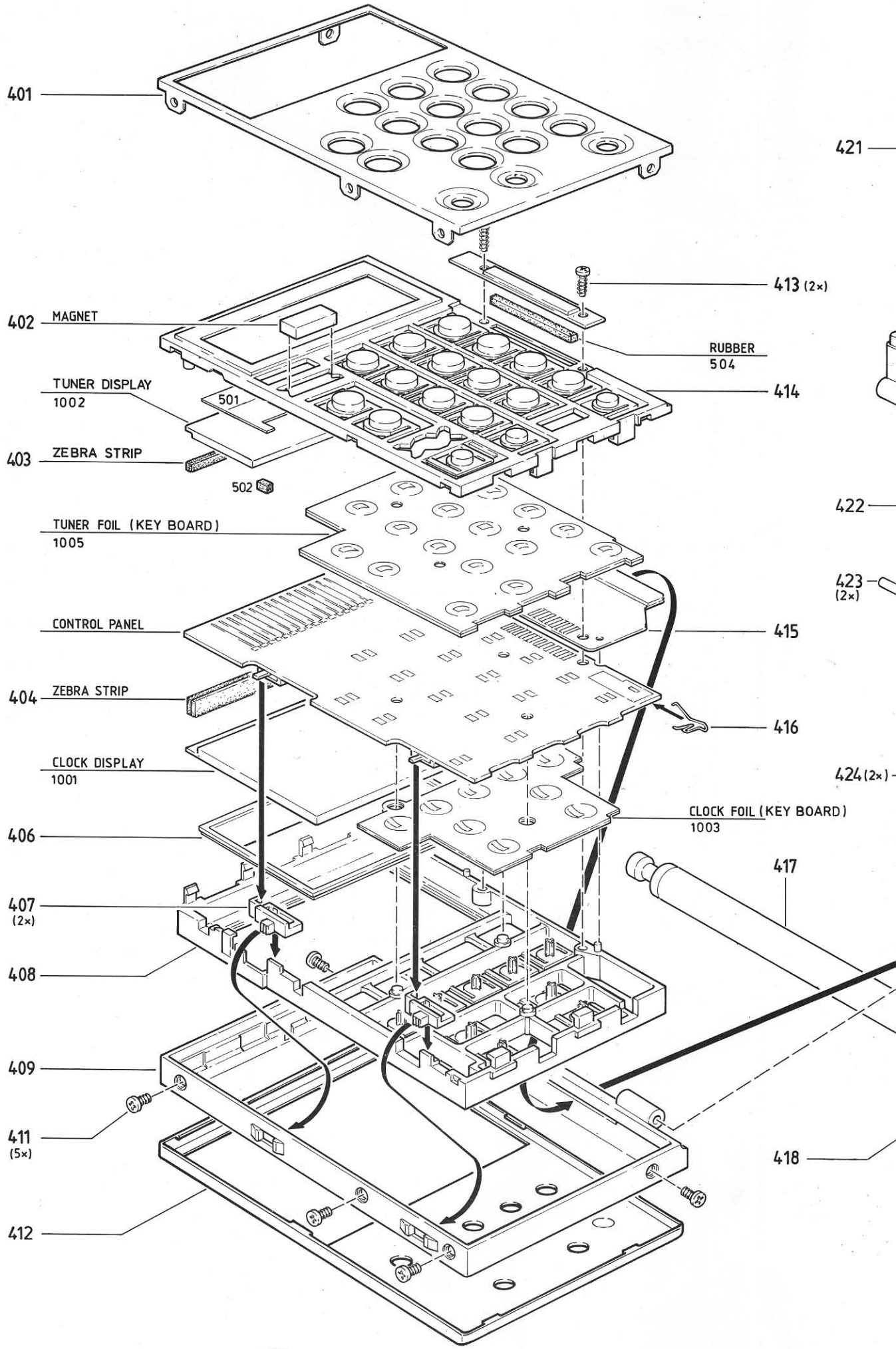
401
421
413 (2×)
402 MAGNET
RUBBER
504
TUNER DISPLAY
1002
501
414
403 ZEBRA STRIP
502
422
TUNER FOIL (KEY BOARD)
1005
423
(2×)
CONTROL PANEL
415
404 ZEBRA STRIP
416
CLOCK DISPLAY
1001
424 (2×)
CLOCK FOIL (KEY BOARD)
1003
406
417
407
(2×)
408
409
411
(5×)
418
412

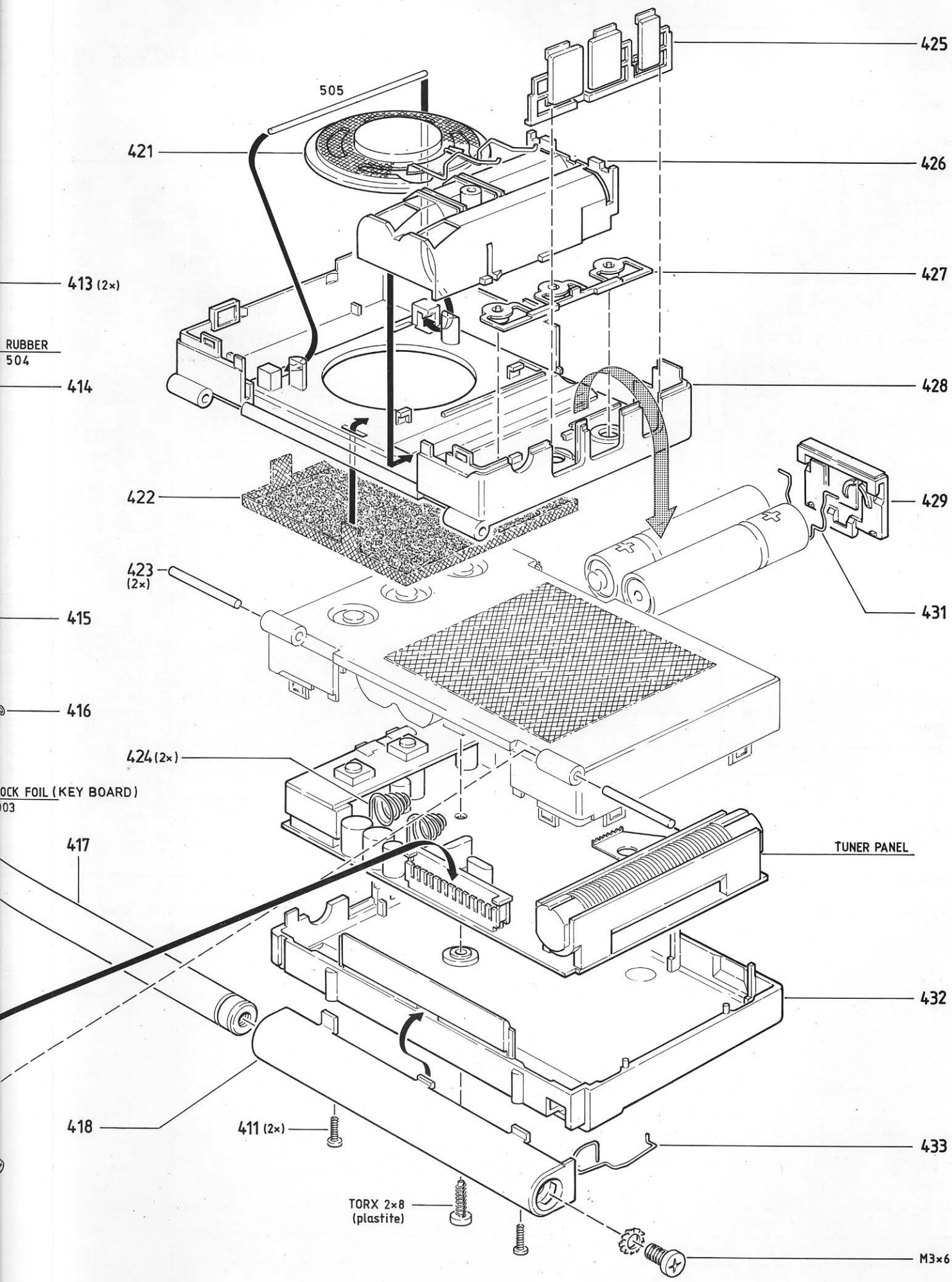
425
505
421
426
413 (2×)
427
RUBBER
504
414
428
422
429
423
(2×)
431
415
416
424 (2×)
OCK FOIL (KEY BOARD)
03
417
TUNER PANEL
432
418
411 (2×)
433
TORX 2×8
(plastite)
M3×6

MECHANICAL PARTS

401	4822 454 21057	TUNER COVER PRINTED
402	4822 526 20197	MAGNET
406	4822 450 61796	WINDOW PRINTED
407	4822 410 61596	KNOB PRINTED
408	4822 410 61593	CLOCK BUTTON PRINTED
409	4822 464 70584	FRAME LACQUERED
411	4822 502 13871	SCREW TAPPING
412	4822 454 21056	CLOCK COVER PRINTED
413	4822 502 13872	SCREW PLASTITE
414	4822 410 61594	TUNER BUTTON PRINTED
416	4822 492 70987	SPRING
418	4822 404 10856	ANTENNA SUPPORT
422	4822 458 30621	SPEAKER GRILL
422	4822 492 70783	LS-spring
424	4822 535 93271	AXLE
425	4822 410 61595	KEY SET (VOLUME)
427	4822 410 61592	KEY SET (MUSIC/NEWS)
428	4822 423 51094	FRONT PRINTED
429	4822 423 41157	BATTERY LID
431	4822 290 81457	CONTACT SPRING
432	4822 421 20054	REAR CABINET
433	4822 290 81453	CONTACT SPRING
1003	4822 466 10613	CLOCK FOIL ASSY
1005	4822 466 10614	TUNER FOIL ASSY
1007	4822 240 30602	LOUDSPEAKER
1008	4822 303 30408	TELESCOPIC AERIAL
1010	4822 210 10453	TUNER (complete)
1040	4822 214 51925	CONTROL PRINT (assy)
1050	4822 214 51926	LF PRINT (complete)
8001	4822 267 41024	ZEBRA STRIP (Clock)
8002	4822 267 41025	ZEBRA STRIP (Tuner)
8003	4822 214 51924	FLEX PCB
	4822 156 31045	SHORT WAVE ANTENNA
	4822 015 20383	SBC3137 (EAR PHONE)

MISCELLANEOUS

1001	4822 130 91043	LCD (CLOCK)
1002	4822 130 91042	LCD (TUNER)
1003	4822 466 10613	CLOCK FOIL ASSY
1005	4822 466 10614	TUNER FOIL ASSY
1007	4822 240 30602	LOUDSPEAKER
1008	4822 303 30408	TELESCOPIC AERIAL
1010	4822 210 10453	TUNER (complete)
1040	4822 214 51925	CONTROL PRINT (assy)
1050	4822 214 51926	LF PRINT (complete)
1253	4822 267 31421	PHONE JACK
1254	4822 267 31149	EXT. DC SOCKET
1255	4822 276 13202	TACT SWITCH
1257	4822 290 81452	BATTERY SPRING
1258	4822 290 81452	BATTERY SPRING
1401	4822 277 21575	SLIDE SWITCH
1402	4822 277 21575	SLIDE SWITCH
1502	4822 276 13171	SWITCH TACT
1503	4822 276 13171	SWITCH TACT
1504	4822 276 13171	SWITCH TACT
1505	4822 276 13176	TACT SWITCH
1506	4822 276 13176	TACT SWITCH
8001	4822 267 41024	ZEBRA STRIP (Clock)
8002	4822 267 41025	ZEBRA STRIP (Tuner)
8003	4822 214 51924	FLEX PCB

DIODES

6101	4822 130 80727	MA110
6102	4822 130 82832	1SS319
6104	4822 130 80727	MA110
6105	4822 130 82833	1SV228
6106	4822 130 80727	MA110
6107	4822 130 81789	HVM16TR
6108	4822 130 81789	HVM16TR
6109	4822 130 80727	MA110
6110	4822 130 80727	MA110
6111	4822 130 80727	MA110
6170	5322 130 34337	BAV99
6171	5322 130 34337	BAV99
6172	4822 130 80727	MA110
6210	5322 130 34331	BAV70
6211	4822 130 80727	MA110
6213	4822 130 80727	MA110
6250	5322 130 34331	BAV70
6281	4822 130 80727	MA110
6282	4822 130 80727	MA110
6283	4822 130 82834	RB411D
6501	5322 130 34337	BAV99
6502	5322 130 34337	BAV99
6503	4822 130 80727	MA110

TRANSISTORS

7101	5322 130 42718	BFS20 (CHIP)
7102	5322 130 42136	BC848C(CHIP)
7103	5322 130 42136	BC848C(CHIP)
7104	5322 130 42136	BC848C(CHIP)
7106	4822 130 42131	BF550
7107	5322 130 42718	BFS20 (CHIP)
7108	5322 130 42718	BFS20 (CHIP)
7109	5322 130 42136	BC848C(CHIP)
7110	5322 130 42136	BC848C(CHIP)
7111	5322 130 42136	BC848C(CHIP)
7112	5322 130 41983	BC858B(CHIP)
7113	5322 130 42136	BC848C(CHIP)
7114	5322 130 41983	BC858B(CHIP)
7115	5322 130 42136	BC848C(CHIP)
7116	5322 130 41983	BC858B(CHIP)
7117	5322 130 42718	BFS20 (CHIP)

TRANSISTORS

7118	5322 130 42136	BC848C(CHIP)
7120	5322 130 42718	BFS20 (CHIP)
7123	5322 130 42136	BC848C(CHIP)
7124	5322 130 41983	BC858B(CHIP)
7125	5322 130 42718	BFS20 (CHIP)
7126	5322 130 42136	BC848C(CHIP)
7127	5322 130 42136	BC848C(CHIP)
7128	5322 130 42136	BC848C(CHIP)
7130	5322 130 42718	BFS20 (CHIP)
7131	5322 130 42136	BC848C(CHIP)
7134	5322 130 41983	BC858B(CHIP)
7135	4822 130 42131	BF550
7136	5322 130 42136	BC848C(CHIP)
7210	5322 130 42136	BC848C(CHIP)
7211	5322 130 41983	BC858B(CHIP)
7213	5322 130 42718	BFS20 (CHIP)
7214	5322 130 42718	BFS20 (CHIP)
7251	5322 130 41983	BC858B(CHIP)
7252	5322 130 41983	BC858B(CHIP)
7253	5322 130 42136	BC848C(CHIP)
7254	5322 130 42136	BC848C(CHIP)
7255	5322 130 42136	BC848C(CHIP)
7256	5322 130 42136	BC848C(CHIP)
7282	5322 130 42136	BC848C(CHIP)
7283	4822 130 61919	BCX69-25
7402	5322 130 41983	BC858B(CHIP)
7502	5322 130 42136	BC848C(CHIP)

INTEGRATED CIRCUITS

7105	4822 209 30606	MM74HCU04M
7121	4822 209 30606	MM74HCU04M
7122	4822 209 30606	MM74HCU04M
7129	4822 209 73851	CXA1238M
7132	4822 209 73849	HEF4007UBT
7133	4822 209 30605	TD7101F
7212	4822 209 30606	MM74HCU04M
7257	4822 209 30606	MM74HCU04M
7281	4822 209 30432	LA4535 M
7284	4822 209 30606	MM74HCU04M
7500	4822 209 30606	MM74HCU04M
7501	4822 209 30606	MM74HCU04M

COILS

5101	4822 157 63626	2,2µH
5102	4822 157 63624	220nH
5103	4822 526 10547	FERRITE ANTENNA
5111	4822 157 63621	220µH
5112	4822 157 63628	47µH
5113	4822 157 63625	1µH
5114	4822 157 63622	470nH
5115	4822 157 63629	3,3µH
5117	4822 157 63621	220µH
5118	4822 157 63624	220nH
5119	4822 242 81022	X-TAL 55,845MHz
5120	4822 157 63624	220nH
5121	4822 157 63626	2,2µH
5122	4822 157 63621	220µH
5123	4822 242 81024	CER FILTER 450kHz
5124	4822 242 81023	X-TAL 55,3925MHz
5140	4822 157 63623	180nH
5141	4822 157 63627	4,7µH
5142	4822 157 63627	4,7µH
5170	4822 157 63623	180nH
5180	4822 157 60592	COIL VAR. FM-RF
5181	4822 157 60592	COIL VAR. FM-RF
5182	4822 157 63621	220µH

COILS

5183	4822 242 81025	CER FILTER 450kHz
5184	4822 157 60596	CERAM. FILTER 10,7Mc
5185	4822 157 60596	CERAM. FILTER 10,7Mc
5186	4822 157 60595	FM DISCR. 10,7MHz
5281	4822 157 63624	220nH
5282	4822 157 63624	220nH
5283	4822 157 63624	220nH
5401	4822 242 81021	QUARTZ 75kHz
5410	4822 242 81016	X-TAL 32,768kHz
5411	4822 242 81026	CER RESONATOR 500kHz

CHIP RESISTORS

3101	4822 051 20101	100R	5%	0,1W
3102	4822 051 20104	100k	5%	0,1W
3103	4822 051 20101	100R	5%	0,1W
3104	4822 051 20101	100R	5%	0,1W
3106	4822 051 20103	10k	5%	0,1W
3107	4822 051 20104	100k	5%	0,1W
3108	4822 051 20335	3M3	5%	0,1W
3109	4822 051 20473	47k	5%	0,1W
3110	4822 051 20103	10k	5%	0,1W
3111	4822 051 20103	10k	5%	0,1W
3112	4822 051 10102	1k	2%	0,25W
3113	4822 051 20181	180R	5%	0,1W
3114	4822 051 20222	2k2	5%	0,1W
3115	4822 051 20332	3k3	5%	0,1W
3116	4822 051 20105	1M	5%	0,1W
3117	4822 051 20222	2k2	5%	0,1W
3118	4822 051 10102	1k	2%	0,25W
3119	4822 051 20472	4k7	5%	0,1W
3120	4822 051 20105	1M	5%	0,1W
3121	4822 051 10102	1k	2%	0,25W
3122	4822 051 20101	100R	5%	0,1W
3123	4822 051 20473	47k	5%	0,1W
3124	4822 051 20472	4k7	5%	0,1W
3125	4822 051 20103	10k	5%	0,1W
3126	4822 051 20472	4k7	5%	0,1W
3127	4822 051 20223	22k	5%	0,1W
3128	4822 051 20104	100k	5%	0,1W
3129	4822 051 20332	3k3	5%	0,1W
3130	4822 051 20225	2M2	5%	0,1W
3131	4822 051 20105	1M	5%	0,1W
3132	4822 051 20681	680R	5%	0,1W
3133	4822 051 20103	10k	5%	0,1W
3134	4822 051 10225	2,2M	10%	0,125W
3135	4822 051 20105	1M	5%	0,1W
3136	4822 051 20222	2k2	5%	0,1W
3137	4822 051 20103	10k	5%	0,1W
3138	4822 051 20103	10k	5%	0,1W
3139	4822 051 20222	2k2	5%	0,1W
3140	4822 051 20105	1M	5%	0,1W
3141	4822 051 20225	2M2	5%	0,1W
3143	4822 051 20105	1M	5%	0,1W
3144	4822 051 20103	10k	5%	0,1W
3145	4822 051 20103	10k	5%	0,1W
3146	4822 051 20104	100k	5%	0,1W
3147	4822 051 20222	2k2	5%	0,1W
3148	4822 051 20103	10k	5%	0,1W
3149	4822 051 20221	220R	5%	0,1W
3150	4822 051 20471	470R	5%	0,1W
3152	4822 051 20103	10k	5%	0,1W
3153	4822 051 20104	100k	5%	0,1W
3154	4822 051 20472	4k7	5%	0,1W
3155	4822 051 10103	10k	2%	0,25W
3156	4822 051 20473	47k	5%	0,1W
3157	4822 051 20104	100k	5%	0,1W

CHIP RESISTORS

3158	4822 051 20472	4k7	5%	0,1W
3159	4822 051 20104	100k	5%	0,1W
3160	4822 051 20104	100k	5%	0,1W
3161	4822 051 20473	47k	5%	0,1W
3162	4822 051 20224	220k	5%	0,1W
3163	4822 051 20684	680k	5%	0,1W
3164	4822 051 20335	3M3	5%	0,1W
3165	4822 051 20105	1M	5%	0,1W
3166	4822 051 20104	100k	5%	0,1W
3167	4822 051 20475	4M7	5%	0,1W
3168	4822 051 20684	680k	5%	0,1W
3169	4822 051 10472	4k7	2%	0,25W
3170	4822 051 20103	10k	5%	0,1W
3171	4822 051 10102	1k	2%	0,25W
3172	4822 051 10102	1k	2%	0,25W
3173	4822 051 20101	100R	5%	0,1W
3174	4822 051 10102	1k	2%	0,25W
3175	4822 051 20103	10k	5%	0,1W
3176	4822 051 20331	330R	5%	0,1W
3178	4822 051 20331	330R	5%	0,1W
3179	4822 051 20104	100k	5%	0,1W
3180	4822 051 20229	22R	5%	0,1W
3181	4822 051 20103	10k	5%	0,1W
3182	4822 051 10103	10k	2%	0,25W
3183	4822 051 20105	1M	5%	0,1W
3184	4822 051 20222	2k2	5%	0,1W
3185	4822 100 11575	10k TRIMPOT SMD		
3186	4822 051 20223	22k	5%	0,1W
3187	4822 051 20101	100R	5%	0,1W
3188	4822 051 20222	2k2	5%	0,1W
3189	4822 051 20222	2k2	5%	0,1W
3190	4822 051 20104	100k	5%	0,1W
3191	4822 051 20472	4k7	5%	0,1W
3192	4822 051 20104	100k	5%	0,1W
3193	4822 051 20335	3M3	5%	0,1W
3194	4822 051 20824	820k	5%	0,1W
3195	4822 051 20103	10k	5%	0,1W
3196	4822 051 20105	1M	5%	0,1W
3197	4822 051 20223	22k	5%	0,1W
3198	4822 051 20222	2k2	5%	0,1W
3199	4822 100 11826	470k TRIMPOT		
3201	4822 051 20332	3k3	5%	0,1W
3202	4822 051 20332	3k3	5%	0,1W
3203	4822 051 20474	470k	5%	0,1W
3204	4822 051 20474	470k	5%	0,1W
3205	4822 051 20105	1M	5%	0,1W
3206	4822 051 20105	1M	5%	0,1W
3210	4822 051 20225	2M2	5%	0,1W
3211	4822 051 20105	1M	5%	0,1W
3213	4822 051 20472	4k7	5%	0,1W
3214	4822 051 20103	10k	5%	0,1W
3215	4822 051 20103	10k	5%	0,1W
3216	4822 051 10102	1k	2%	0,25W
3217	4822 051 20105	1M	5%	0,1W
3218	4822 051 20103	10k	5%	0,1W
3219	4822 051 20223	22k	5%	0,1W
3220	4822 051 20105	1M	5%	0,1W
3221	4822 051 20222	2k2	5%	0,1W
3222	4822 051 10102	1k	2%	0,25W
3223	4822 051 20222	2k2	5%	0,1W
3224	4822 100 11574	1k TRIMPOT SMD		
3225	4822 051 20152	1k5	5%	0,1W
3226	4822 051 20122	1,2k	5%	0,1W
3227	4822 051 20221	220R	5%	0,1W
3228	4822 051 20471	470R	5%	0,1W
3241	4822 051 20008	CHIP JUMPER 1206		

CHIP RESISTORS

3242	4822 051 10008	JUMPER		
3243	4822 051 10008	JUMPER		
3244	4822 051 10008	JUMPER		
3245	4822 051 10103	10k	2%	0,25W
3246	4822 051 20008	CHIP JUMPER 1206		
3247	4822 051 10008	JUMPER		
3248	4822 051 20008	CHIP JUMPER 1206		
3249	4822 051 10008	JUMPER		
3250	4822 051 10102	1k	2%	0,25W
3251	4822 051 20105	1M	5%	0,1W
3252	4822 051 20105	1M	5%	0,1W
3253	4822 051 20824	820k	5%	0,1W
3254	4822 051 20824	820k	5%	0,1W
3255	4822 051 20105	1M	5%	0,1W
3256	4822 051 20105	1M	5%	0,1W
3257	4822 051 20684	680k	5%	0,1W
3258	4822 051 20684	680k	5%	0,1W
3259	4822 051 20105	1M	5%	0,1W
3260	4822 051 20105	1M	5%	0,1W
3261	4822 051 20185	1,8M	5%	0,1W
3262	4822 051 20185	1,8M	5%	0,1W
3263	4822 051 20103	10k	5%	0,1W
3264	4822 051 20103	10k	5%	0,1W
3265	4822 051 20103	10k	5%	0,1W
3267	4822 051 20105	1M	5%	0,1W
3268	4822 051 20105	1M	5%	0,1W
3269	4822 051 20105	1M	5%	0,1W
3270	4822 051 20105	1M	5%	0,1W
3271	4822 051 20105	1M	5%	0,1W
3272	4822 051 20105	1M	5%	0,1W
3273	4822 051 20105	1M	5%	0,1W
3274	4822 051 20105	1M	5%	0,1W
3275	4822 051 20914	910k	5%	0,1W
3276	4822 051 20914	910k	5%	0,1W
3280	4822 051 20478	4R7	5%	0,1W
3281	4822 051 20105	1M	5%	0,1W
3282	4822 051 20105	1M	5%	0,1W
3283	4822 051 20472	4k7	5%	0,1W
3284	4822 051 20103	10k	5%	0,1W
3285	4822 051 20105	1M	5%	0,1W
3286	4822 051 20224	220k	5%	0,1W
3287	4822 051 20478	4R7	5%	0,1W
3288	4822 051 20478	4R7	5%	0,1W
3289	4822 051 20105	1M	5%	0,1W
3290	4822 051 20104	100k	5%	0,1W
3291	4822 051 20224	220k	5%	0,1W
3292	4822 051 20104	100k	5%	0,1W
3293	4822 051 20684	680k	5%	0,1W
3294	4822 051 20105	1M	5%	0,1W
3295	4822 051 20335	3M3	5%	0,1W
3296	4822 051 20335	3M3	5%	0,1W
3297	4822 051 20101	100R	5%	0,1W
3299	4822 051 20222	2k2	5%	0,1W
3300	4822 051 20103	10k	5%	0,1W
3301	4822 051 20103	10k	5%	0,1W
3401	4822 051 20103	10k	5%	0,1W
3402	4822 051 20104	100k	5%	0,1W
3403	4822 051 20104	100k	5%	0,1W
3404	4822 051 20105	1M	5%	0,1W
3405	4822 051 20104	100k	5%	0,1W
3406	4822 051 20104	100k	5%	0,1W
3410	4822 051 20225	2M2	5%	0,1W
3420	4822 051 20008	CHIP JUMPER 1206		
3501	4822 051 20105	1M	5%	0,1W
3502	4822 051 20105	1M	5%	0,1W
3503	4822 051 20335	3M3	5%	0,1W

CHIP RESISTORS

3504	4822 051 20335	3M3	5%	0,1W
3505	4822 051 20824	820k	5%	0,1W
3506	4822 051 20105	1M	5%	0,1W
3507	4822 051 20474	470k	5%	0,1W
3508	4822 051 10102	1k	2%	0,25W
3509	4822 051 20103	10k	5%	0,1W
3510	4822 051 20103	10k	5%	0,1W
3511	4822 051 20104	100k	5%	0,1W
3512	4822 051 20104	100k	5%	0,1W
3513	4822 051 20335	3M3	5%	0,1W
3514	4822 051 20335	3M3	5%	0,1W
3515	4822 051 20474	470k	5%	0,1W
3516	4822 051 20474	470k	5%	0,1W
3517	4822 051 20104	100k	5%	0,1W
3518	4822 051 20104	100k	5%	0,1W
3519	4822 051 20335	3M3	5%	0,1W
3520	4822 051 20335	3M3	5%	0,1W
3521	4822 051 10102	1k	2%	0,25W
3522	4822 051 20103	10k	5%	0,1W
3523	4822 051 20225	2M2	5%	0,1W
3524	4822 051 20103	10k	5%	0,1W
3525	4822 051 20225	2M2	5%	0,1W
3526	4822 051 20475	4M7	5%	0,1W
3527	4822 051 20222	2k2	5%	0,1W

CAPACITORS

2131	4822 124 42315	47µF	20%	4V
2193	4822 124 42317	220µF	20%	4V
2194	5322 124 41943	4,7µF	20%	35V
2196	4822 124 22649	10µF	20%	16V
2211	4822 124 22649	10µF	20%	16V
2212	4822 124 22649	10µF	20%	16V
2213	5322 124 41943	4,7µF	20%	35V
2285	4822 124 42315	47µF	20%	4V
2289	4822 124 22649	10µF	20%	16V
2291	4822 124 42316	100µF	20%	4V
2292	4822 124 42316	100µF	20%	4V
2293	4822 124 42321	470µF	20%	4V
2295	4822 124 42317	220µF	20%	4V
2296	4822 124 42317	220µF	20%	4V
2300	4822 124 42322	47000µF	20%	5,5V
2403	5322 122 32481	15pF	5%	50V

CHIP CAPACITORS

2101	5322 122 32531	100pF	5%	50V
2102	5322 122 32659	33pF	5%	50V
2103	4822 126 10002	100nF	20%	50V
2104	5322 122 32531	100pF	5%	50V
2105	4822 122 33496	100nF	10%	63V
2106	5322 122 31842	330pF	5%	63V
2107	5322 122 34123	1nF	10%	50V
2108	4822 126 11692	1µF	20%	16V
2109	5322 122 34123	1nF	10%	50V
2110	5322 122 34123	1nF	10%	50V
2111	4822 122 32535	680pF		
2112	4822 122 33177	10nF	20%	50V
2114	4822 126 10508	trimcap 20pF		
2115	4822 122 33496	100nF	10%	63V
2116	4822 122 31765	100pF	5%	50V
2117	5322 122 32287	4,7pF	5%	50V
2118	4822 126 10507	10pF TRIMCAP SMD		
2119	5322 122 31946	27pF	5%	50V
2120	4822 126 10507	10pF TRIMCAP SMD		
2121	5322 122 31946	27pF	5%	50V
2122	5322 122 32287	4,7pF	5%	50V
2123	5322 122 32448	10pF	5%	50V

2124	5322 122 32661	56pF	5%	50V
2125	4822 122 32479	1pF	5%	50V
2126	5322 122 34123	1nF	10%	50V
2127	5322 122 32658	22pF	5%	50V
2129	4822 122 31773	560pF	5%	50V
2130	5322 122 32531	100pF	5%	50V
2132	5322 122 34123	1nF	10%	50V
2133	4822 126 11692	1µF	20%	16V
2134	5322 124 10802	10µF	20%	4V
2135	4822 126 11692	1µF	20%	16V
2136	5322 124 10802	10µF	20%	4V
2137	4822 126 11692	1µF	20%	16V
2138	5322 124 10802	10µF	20%	4V
2139	4822 122 33496	100nF	10%	63V
2140	5322 122 33063	2,2pF	10%	50V
2141	5322 122 32452	47pF	5%	50V
2142	5322 122 32531	100pF	5%	50V
2143	5322 122 32658	22pF	5%	50V
2144	4822 122 33177	10nF	20%	50V
2146	4822 122 33177	10nF	20%	50V
2147	4822 126 10002	100nF	20%	50V
2154	4822 122 32139	12pF	5%	63V
2155	5322 122 32287	4,7pF	5%	50V
2156	4822 122 33496	100nF	10%	63V
2157	4822 126 10002	100nF	20%	50V
2158	5322 122 32531	100pF	5%	50V
2159	4822 122 33342	33nF	10%	63V
2160	4822 126 11692	1µF	20%	16V
2161	4822 122 31947	100nF	20%	50V
2162	4822 122 33496	100nF	10%	63V
2163	5322 122 34123	1nF	10%	50V
2164	5322 122 34123	1nF	10%	50V
2165	4822 122 33496	100nF	10%	63V
2166	5322 122 34123	1nF	10%	50V
2167	5322 122 32287	4,7pF	5%	50V
2168	4822 122 32482	22pF	5%	63V
2169	4822 126 10507	10pF TRIMCAP SMD		
2170	5322 122 34123	1nF	10%	50V
2171	5322 122 34123	1nF	10%	50V
2172	5322 122 34123	1nF	10%	50V
2173	5322 122 34123	1nF	10%	50V
2174	4822 126 10002	100nF	20%	50V
2175	4822 122 33177	10nF	20%	50V
2176	5322 122 32531	100pF	5%	50V
2177	5322 122 34123	1nF	10%	50V
2178	5322 122 32452	47pF	5%	50V
2179	5322 122 32452	47pF	5%	50V
2181	4822 126 10507	10pF TRIMCAP SMD		
2182	5322 122 32287	4,7pF	5%	50V
2183	5322 122 34123	1nF	10%	50V
2184	4822 122 33177	10nF	20%	50V
2185	4822 122 33496	100nF	10%	63V
2186	4822 122 32139	12pF	5%	63V
2187	5322 124 10802	10µF	20%	4V
2188	4822 122 32765	820pF	10%	63V
2189	4822 122 31807	1,2nF	5%	50V
2190	4822 122 33496	100nF	10%	63V
2191	5322 122 34123	1nF	10%	50V
2192	4822 126 11692	1µF	20%	16V
2195	4822 126 11692	1µF	20%	16V
2197	4822 126 11692	1µF	20%	16V
2198	5322 124 10801	4,7µF		4V
2199	4822 122 33325	470nF	20%	50V
2200	4822 122 33496	100nF	10%	63V
2201	4822 122 33339	4,7nF	10%	50V
2202	4822 122 33339	4,7nF	10%	50V

CHIP CAPACITORS

2203	5322 122 32654	22nF	10%	63V
2204	5322 122 32654	22nF	10%	63V
2205	5322 122 32659	33pF	5%	50V
2206	5322 122 32659	33pF	5%	50V
2207	5322 122 32654	22nF	10%	63V
2210	4822 126 11692	1µF	20%	16V
2214	5322 122 32452	47pF	5%	50V
2215	5322 122 32531	100pF	5%	50V
2216	5322 122 34123	1nF	10%	50V
2217	5322 122 32452	47pF	5%	50V
2218	5322 122 32452	47pF	5%	50V
2219	5322 122 32531	100pF	5%	50V
2220	4822 122 32575	220pF	10%	500V
2221	5322 122 32448	10pF	5%	50V
2222	5322 122 32448	10pF	5%	50V
2223	5322 122 32452	47pF	5%	50V
2250	4822 126 11692	1µF	20%	16V
2251	5322 122 32452	47pF	5%	50V
2252	5322 122 32452	47pF	5%	50V
2253	5322 122 32658	22pF	5%	50V
2254	5322 122 32658	22pF	5%	50V
2255	4822 122 33496	100nF	10%	63V
2257	5322 122 32268	470pF	10%	50V
2258	5322 122 32268	470pF	10%	50V
2259	5322 122 32658	22pF	5%	50V
2260	5322 122 32658	22pF	5%	50V
2261	4822 122 33177	10nF	20%	50V
2262	4822 122 33177	10nF	20%	50V
2263	4822 126 10002	100nF	20%	50V
2281	4822 122 33177	10nF	20%	50V
2282	4822 122 33177	10nF	20%	50V
2283	4822 122 33496	100nF	10%	63V
2284	4822 122 33496	100nF	10%	63V
2286	4822 126 11692	1µF	20%	16V
2287	4822 122 33496	100nF	10%	63V
2288	4822 122 33496	100nF	10%	63V
2290	4822 122 33496	100nF	10%	63V
2297	5322 122 32268	470pF	10%	50V
2298	4822 122 33177	10nF	20%	50V
2299	4822 122 33177	10nF	20%	50V
2401	4822 126 10002	100nF	20%	50V
2402	5322 122 31946	27pF	5%	50V
2404	5322 124 10802	10µF	20%	4V
2405	4822 126 10002	100nF	20%	50V
2406	4822 126 10002	100nF	20%	50V
2407	4822 126 10002	100nF	20%	50V
2410	5322 122 32654	22nF	10%	63V
2411	4822 126 11692	1µF	20%	16V
2412	4822 126 10002	100nF	20%	50V
2413	5322 122 32661	56pF	5%	50V
2414	4822 126 10002	100nF	20%	50V
2415	4822 126 10002	100nF	20%	50V
2416	4822 126 10002	100nF	20%	50V
2417	4822 126 10002	100nF	20%	50V
2418	4822 126 10002	100nF	20%	50V
2500	4822 122 33177	10nF	20%	50V
2501	5322 122 34123	1nF	10%	50V
2502	5322 124 10801	4,7µF		4V
2503	5322 122 34123	1nF	10%	50V
2504	5322 122 34123	1nF	10%	50V
2505	5322 122 32452	47pF	5%	50V
2506	5322 122 32452	47pF	5%	50V
2507	4822 122 33175	2,2nF	20%	50V
2508	4822 122 33175	2,2nF	20%	50V
2509	4822 122 33496	100nF	10%	63V
2510	5322 124 10802	10µF	20%	4V

A93-350

Service
Service
Service

Product Service Group CE Audio

Service Information

Service solution for Fault : *Weak FM reception*

Replace telescopic antenna (Pos. 417) by **long telescopc antenna 4822 303 30446** .

1993-04-22

GB 4822 725 23793

CS 51 720

Service
Service
Service

Product Service Group CE Audio

Service Information

To avoid unintentional pressing the POWER ON/OFF button, the front and the rear cabinet have been changed in production week 9210.

Therefore in case of damage of the front (pos. 428) **or** the rear cabinet (pos. 432) it´s necessary to change **both** parts if the set is older than production week 9210.

1992-03-12

GB 4822 725 23742

CS 51 532