CDP-C90ES/C910

SERVICE MANUAL

US Model
Canadian Model
CDP-C90ES

US Model
Canadian Model
AEP Model
E Model
Australian Model
CDP-C910

Photo : CDP-C90ES

Model Name Using Similar Mechanism	New Mechanism
CD Mechanism Name	CDM10-5BD7
Base Unit Name	BU-5BD7

SPECIFICATIONS

Compact Disc Player

Frequency response	2 Hz - 20 kHz (±0.3 dB)
Signal to noise ratio	More than 110 dB
Dynamic range	More than 100 dB
Harmonic distortion	Less than 0.0030%
Channel separation	More than 105 dB

Outputs

LINE OUT (FIXED) (phono jacks)	Output level 2 V (at 50 kiloohms) Load impedance over 10 kiloohms
LINE OUT (VARIABLE) (phono jacks)	Output level max 2 V (at 50 kiloohms) Load impedance over 10 kiloohms
DIGITAL OUTPUT (OPTICAL) (optical output connector)	Wave length 660 nm Output level −18 dBm
HEADPHONES (stereo phone jack)	Output level max. 15 mW Load impedance 32 ohms

General

Power requirements

US, Canadian model	: AC120V, 60Hz
AEP model	: 220-230V AC , 50/60Hz
E model	: 110-120V or 220-240V AC adjustable 50/60Hz
Australian model	: AC240V, 50Hz/60Hz

Power consumption

CDP-C910(US, Australian) model, CDP-C90ES(US, Canadian) model	: 18W
CDP-C910(Canadian, AEP, E, Australian) model	: 15W

Dimensions (w/h/d)

CDP-C910 model	: Approx. 430 × 125 × 385 mm (17 × 5 × 15 1/4 inches)
CDP-C90ES model	: Approx. 470 × 125 × 385 mm (18 5/8 × 5 × 15 1/4 inches) Including projecting parts and controls

Weight

CDP-C910 model	: Approx. 6.3kg(13 lbs 15 oz),net
CDP-C90ES model	: Approx. 7.4kg(16 lbs 6 oz)net

Supplied Accessories

Connecting cord
(2 phono plugs ↔ 2 phono plugs) (1)
Disc magazine (1)
Remote commander (1)
Size AA batteries (2)

Design and specifications subject to change without notice.

MC-Service

COMPACT DISK PLAYER

SONY®

SAFETY CHECK-OUT

After correcting the original service problem, perform the following safety check before releasing the set to the customer:
Check the antenna terminals, metal trim, "metallized" knobs, screws, and all other exposed metal parts for AC leakage. Check leakage as described below.

LEAKAGE TEST

The AC leakage from any exposed metal part to earth ground and from all exposed metal parts to any exposed metal part having a return to chassis, must not exceed 0.5 mA (500 microampers). Leakage current can be measured by any one of three methods.

1. A commercial leakage tester, such as the Simpson 229 or RCA WT-540A. Follow the manufacturers' instructions to use these instruments.
2. A battery-operated AC milliammeter. The Data Precision 245 digital multimeter is suitable for this job.
3. Measuring the voltage drop across a resistor by means of a VOM or battery-operated AC voltmeter. The "limit" indication is 0.75 V, so analog meters must have an accurate low-voltage scale. The Simpson 250 and Sanwa SH-63Trd are examples of a passive VOM that is suitable. Nearly all battery operated digital multimeters that have a 2 V AC range are suitable. (See Fig. A)

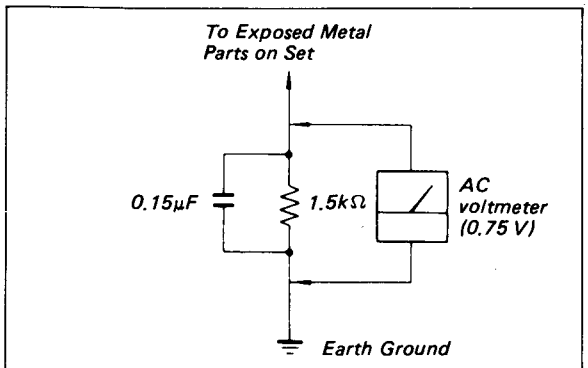

Fig. A. Using an AC voltmeter to check AC leakage.

SAFETY-RELATED COMPONENT WARNING!!

COMPONENTS IDENTIFIED BY MARK ⚠ OR DOTTED LINE WITH MARK ⚠ ON THE SCHEMATIC DIAGRAMS AND IN THE PARTS LIST ARE CRITICAL TO SAFE OPERATION. REPLACE THESE COMPONENTS WITH SONY PARTS WHOSE PART NUMBERS APPEAR AS SHOWN IN THIS MANUAL OR IN SUPPLEMENTS PUBLISHED BY SONY.

TABLE OF CONTENTS

Section	Title	Page
SECTION 1.	GENERAL	3
SECTION 2.	SWITCH AND SENSOR OPERATIONS	4
SECTION 3.	MECHANICAL ADJUSTMENTS	5
SECTION 4.	ELECTRICAL BLOCK CHECKING	7
SECTION 5.	DIAGRAMS	
5-1.	Printed Wiring Boards	9
5-2.	Schematic Diagram — MAIN Section —	13
5-3.	Schematic Diagram — BD Section —	18
5-4.	WAVEFORMS	23
SECTION 6.	EXPLODED VIEWS	
6-1.	Front Panel Assembly Section	24
6-2.	Chassis Assembly Section	25
6-3.	MD Section-1	26
6-4.	MD Section-2	27
6-5.	Optical Pick-Up Block Section	28
SECTION 7.	ELECTRICAL PARTS LIST	29

MODEL IDENTIFICATION

(Specification Label)

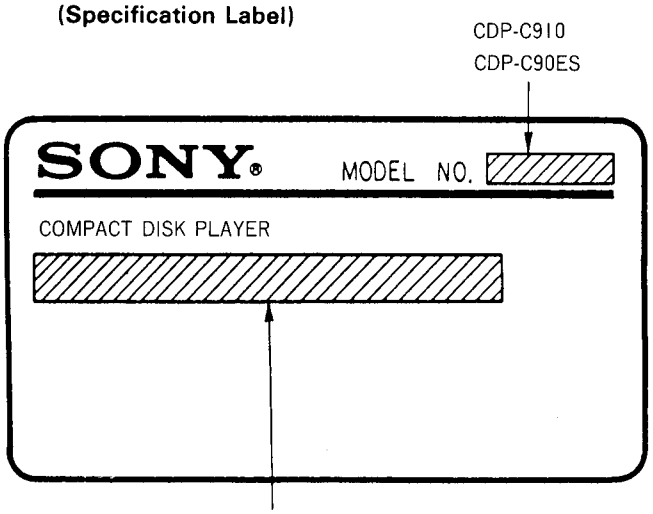

US, Canadian model: AC: 120V 60Hz 15W
AEP model: AC: 220-230V~50/60Hz
E model: AC: 110-120V, 220-230V~50/60Hz 15W
Australian model: AC: 240V~50/60Hz

ATTENTION AU COMPOSANT AYANT RAPPORT À LA SÉCURITÉ!

LES COMPOSANTS IDENTIFIÉS PAR UNE MARQUE ⚠ SUR LES DIAGRAMMES SCHÉMATIQUES ET LA LISTE DES PIÈCES SONT CRITIQUES POUR LA SÉCURITÉ DE FONCTIONNEMENT. NE REMPLACER CES COMPOSANTS QUE PAR DES PIÈCES SONY DONT LES NUMÉROS SONT DONNÉS DANS CE MANUEL OU DANS LES SUPPLÉMENTS PUBLIÉS PAR SONY.

This section is extracted from instruction manual.

SECTION 1
GENERAL

Location of Controls

Front Panel

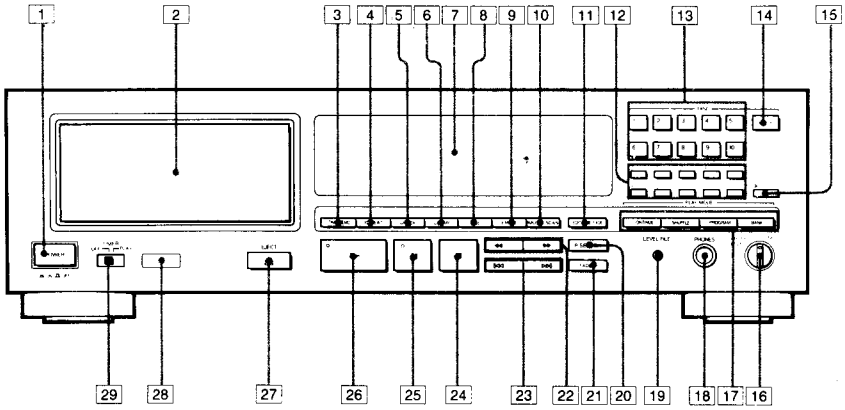

Refer to the pages indicated in ● for details.

1 POWER switch ❾
2 Magazine slot ❽
3 TIME/MEMO button ❿
4 REPEAT button ⓭
5 CHECK (program check) button ⓯
6 CLEAR (program clear) button ⓯
7 Display window ❿
8 FILE button ㉑
9 ERASE button ㉑
10 MUSIC SCAN button ⓴
11 EDIT/TIME FADE button ⓰ ⓲
12 Track buttons ⓫
13 DISC selectors ❾
14 DISC SKIP button ⓫
15 >10 (over 10) button ⓫
16 PHONE LEVEL/LINE OUT LEVEL control ❺ ❾
17 PLAY MODE buttons
CONTINUE button ❾
SHUFFLE button ⓱
PROGRAM button ⓭
BANK button ㉔
18 HEADPHONES jack
19 LEVEL FILE button ㉕
20 P(peak).SEARCH button ⓳
21 FADER button ⓲
22 ◀◀ ▶▶ (manual search) buttons ⓫
23 ⏮ ⏭ (AMS*) buttons ⓫
24 ■ (stop) button ❾
25 ❚❚ (pause) button/indicator ❾
26 ▶ (play) button/indicator ❾
27 ⏏ EJECT button ❾
28 Remote sensor
29 TIMER switch ㉖

* AMS is the abbreviation of Automatic Music Sensor.

Remote Commander

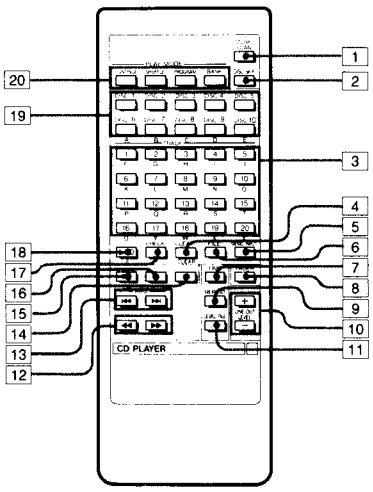

Refer to the pages indicated in ● for details.

1 MUSIC SCAN button ⓴
2 DISC SKIP button ⓫
3 Track buttons ⓫
4 CLEAR (program clear) button ⓯
5 MEMO INPUT button ㉒
6 FILE button ㉑
7 TIME button ❿
8 FADER button ⓲
9 REPEAT button ⓭
10 LINE OUT LEVEL buttons ❺ ❾
11 LEVEL FILE button ㉕
12 ◀◀ ▶▶ (manual search) buttons ⓫
13 ⏮ ⏭ (AMS) buttons ⓫
14 ■ (stop) button ❾
15 ▶ (play) button ❾
16 ❚❚ (pause) button ❾
17 CHECK (program check) button ⓯
18 >20 (over 20) button ⓫
19 DISC selectors ❾
20 PLAY MODE buttons
CONTINUE button ❾
SHUFFLE button ⓱
PROGRAM button ⓭
BANK button ㉔

Buttons with yellow letters (A, B, C, ...) are for writing a disc memo (page 22).

SECTION 2
SWITCH AND SENSOR OPERATIONS

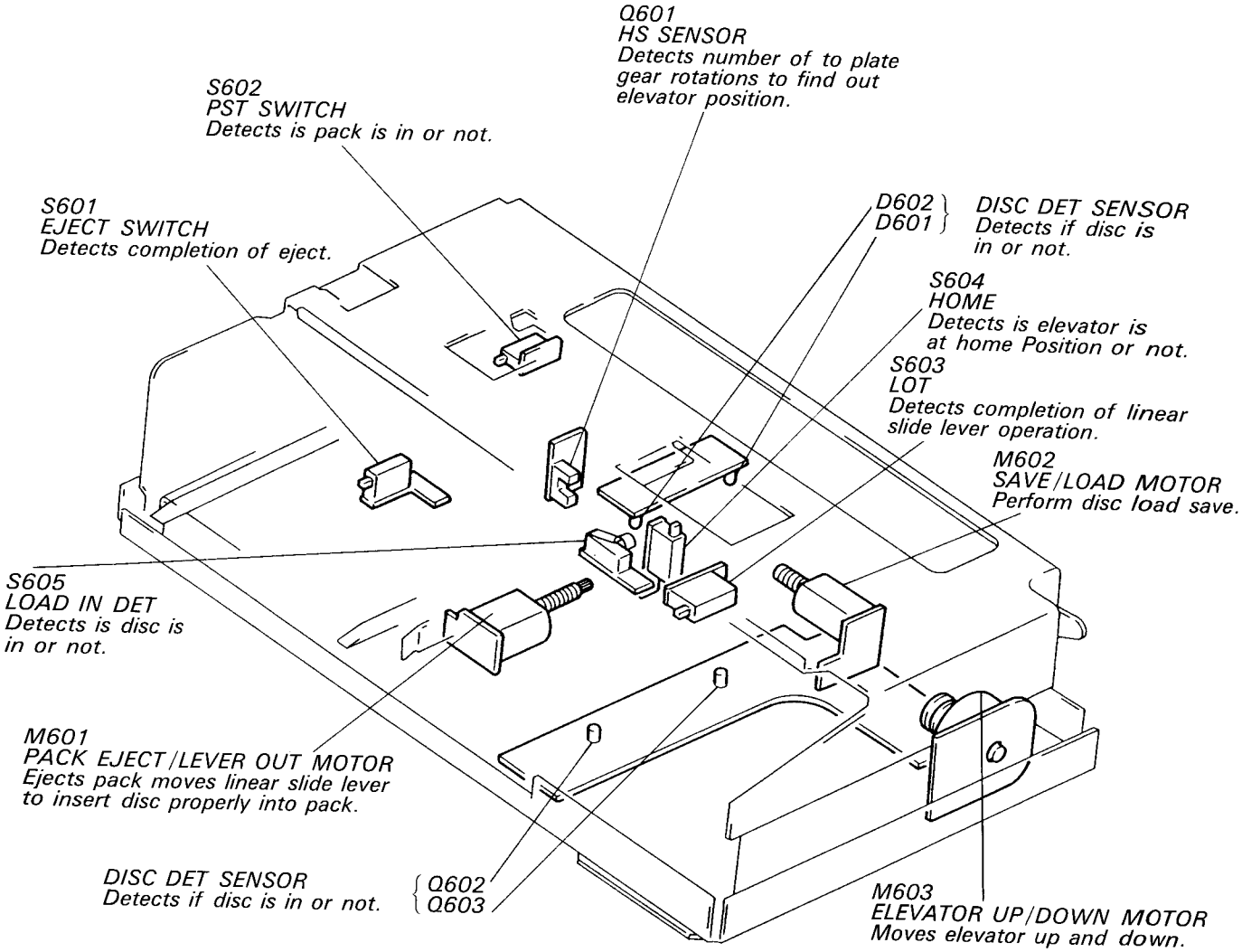

www.manualscenter.com

SECTION 3
MECHANICAL ADJUSTMENTS

LEVELING OF ELEVATOR ASSY

Adjusting Method:

1. Loosen a setscrew on the gear ASSY to free the screw ASSY on both sides.

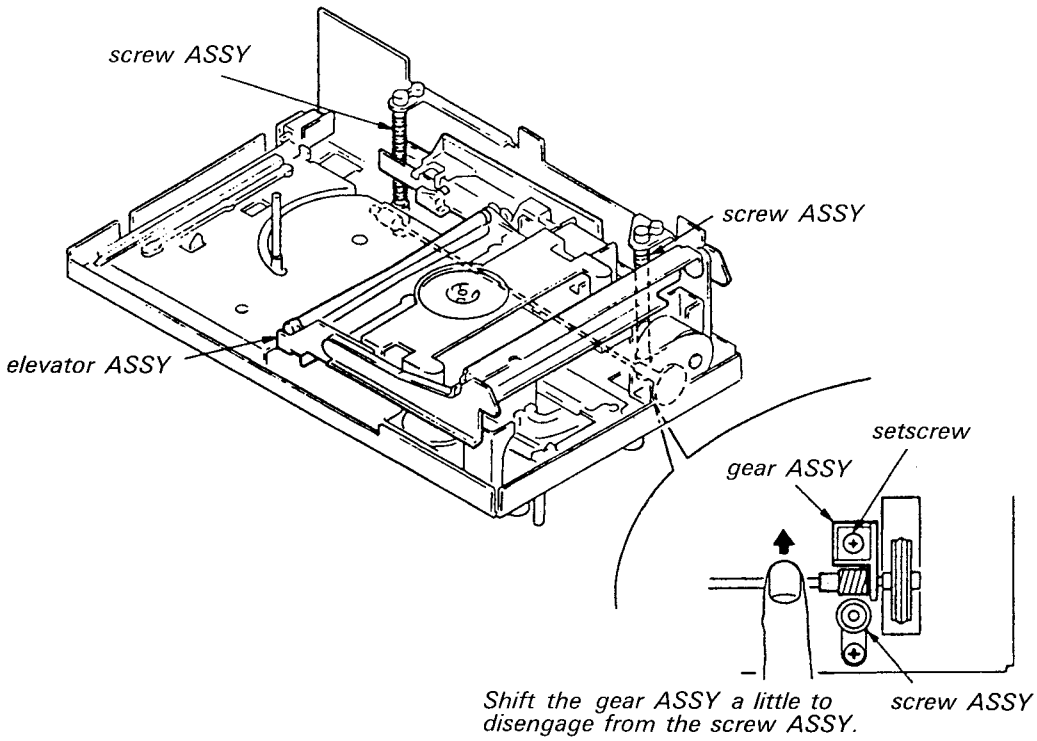

2. Rotating the screw ASSY on both side in arrow ① direction, raise the elevator ASSY while keeping it level until the elevator rise-up portion touches the chassis fin, then tighten a setscrews on the gear ASSY. (See "Leveling of Elevator ASSY".)

Note: Do not further rotate the screw ASSY after touch.

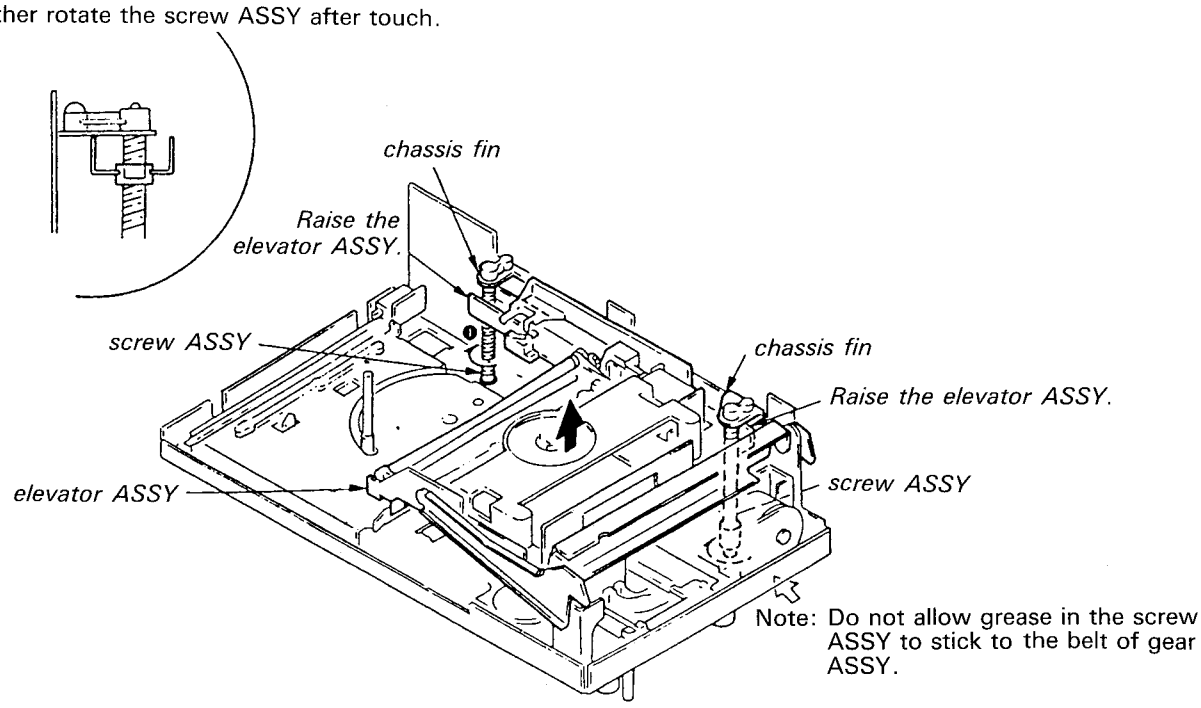

ADJUSTMENT OF ELEVATOR ASSY HEIGHT

Adjusting Method:

1. Rotating the belt of gear ASSY in the arrow direction, raise the elevator ASSY until it touches the chassis.

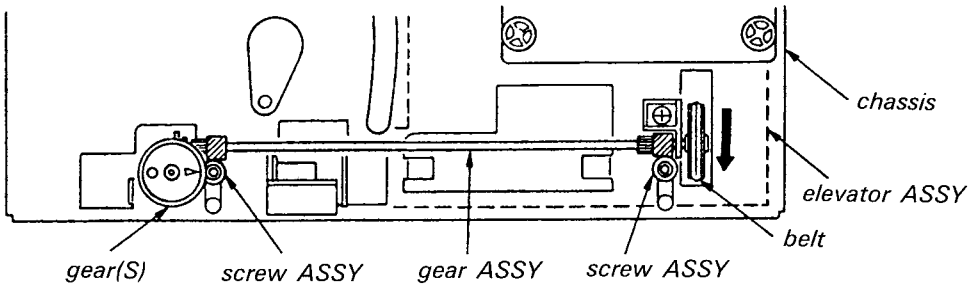

2. Assuming that the marked tooth on gear(S) is the first tooth, align the fourth tooth with chassis rise-up portion, and fix.

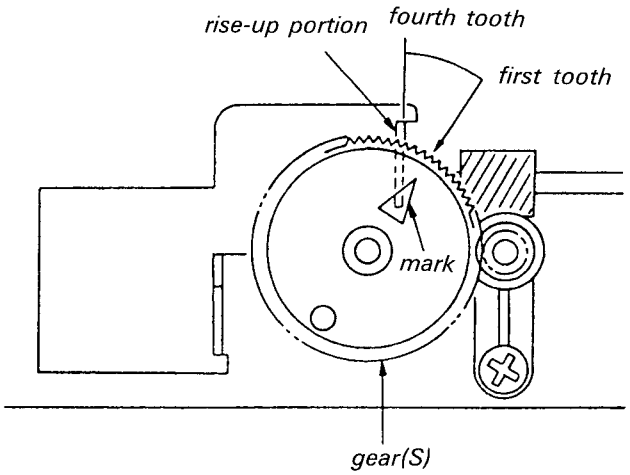

MC-Service

SECTION 4
ELECTRICAL BLOCK CHECKING

Note:

1. CD Block basically constructed to operate without adjustment. Therefore, check each item in order given.
2. Use YEDS-18 disc (3-702-101-01) unless otherwise indicated.
3. Use the oscilloscope with more than 10MΩ impedance.
4. Clean an object lens by an applicator with neutral detergent when the signal level is low than specified value with the following checks.

S Curve Check

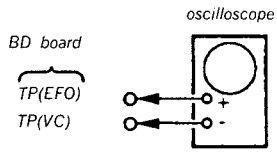

Precedure:

1. Connect osilloscope to test point TP(FEO) on BD board.
2. Connect between test point TP(FES) and TP (VC) by lead wire.
3. Turned Poswer switch on and actuate the focus serch.(actuate the focus serch when disc table is moving in and out.)
4. Check the oscilloscope waveform(S curve) is symmetrical between A and B. And confirm peak to peak level within 3±1Vp-p.

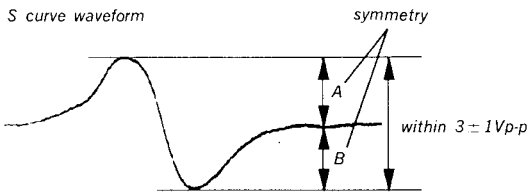

5. After check, remove the lead wire connected in step 2.

Note : • Try to mesure several times to make sure that the ratio of A:B or B:A is more than 10:7.
• Take sweep time as long as possible and light up the brightness to obtain best waveform.

RF Level Check

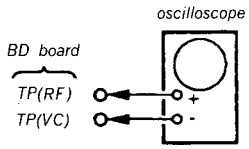

Procedure:

1. Connect oscilloscope to test point TP(RF) on BD board.
2. Turn Power switch on.
3. Put disc(YEDS-18) in and playback.
4. Confirm that oscilloscope waveform is clear and check RF signal level is correct or not.

Note:

Clear RF signal waveform means that the shape " ◇ " can be clearly distinguished at the center of the waveform.

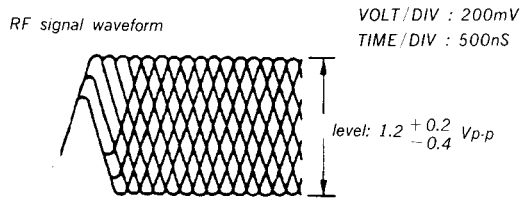

E-F Balance Check

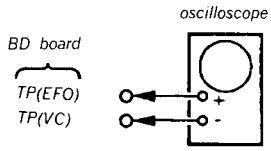

Procedure:

1. Connect test point TP(ADJ) to ground and TP (TES) to TP(VC) with lead wire.
2. Connect oscilloscope to test point TP(TEO) on BD board.

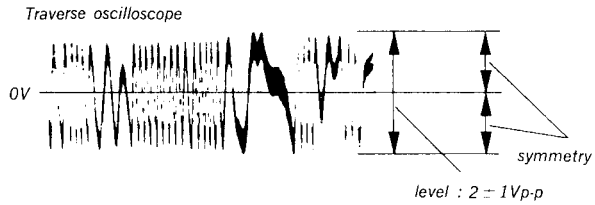

3. Turn Power switch on.
4. Put disc(YEDS-18) in and playback.
5. Confirm that the osilloscope waveform is symmetrical on th top and bottm in relation to 1V, and check this level.
6. Remove the lead wire connected in step 1.

RF PLL Free-run Frequency Check

Procedure:

1. Connect frequency counter to test point(PCK) with lead wire.

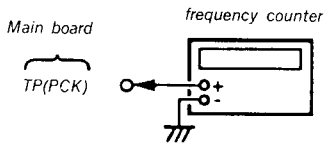

2. Turn Power switch on.
3. Confirm that reading on frequency counter is 4.3218MHz.

Focus/Tracking Gain

This gain has a margin, so even if it is slightly off. There is no problem.
Therefore, do not perform, this adjustment.
Please note that it should be fixed to mechanical center position when you moved and do not know original position.

Adjustment Locations:
[BD board]

— conductor side —

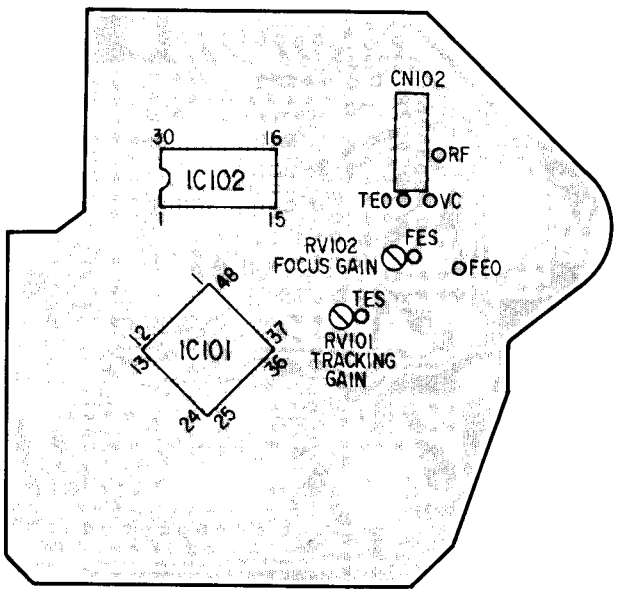

[Main board]

— component side —

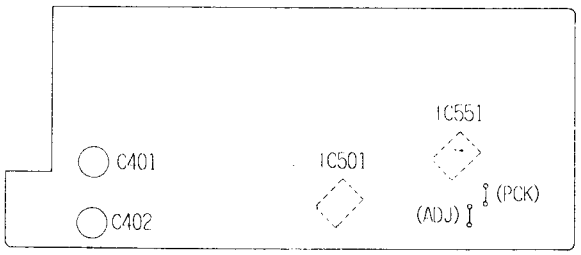

MC-Service

SECTION 5
DIAGRAMS

● Semiconductor Location

Ref. No.	Location	Ref. No.	Location
D301	B-15	IC411	E-24
D302	C-20	IC431	A-18
D303	E-12	IC501	F-17
D351	G-9	IC502	D-17
D401	E-22	IC503	E-19
D402	E-22	IC504	E-19
D403	E-22	IC505	F-19
D404	F-22	IC551	D-14
D411	E-24	IC552	A-20
D412	E-24	IC701	I-17
D421	A-19	IC751	I-23
D422	A-19		
D505	D-18	Q101(MAIN)	B-19
D506	E-18	Q101(BD)	F-27
D507	E-18	Q102	B-19
D514	E-18	Q103	B-19
D515	F-18	Q104	B-20
D601	G-4	Q201	B-19
D602	G-6	Q202	B-19
D701	H-16	Q203	B-19
D702	H-16	Q204	C-20
D703	H-16	Q301	B-20
D704	H-16	Q302	F-19
D705	H-16	Q303	C-12
D706	I-16	Q401	E-21
D707	I-16	Q402	F-21
D711	I-20	Q411	F-24
D712	I-20	Q412	F-24
D713	I-20	Q413	F-24
D714	I-20	Q414	E-24
D715	I-20	Q431	B-20
D716	I-20	Q501	F-18
D721	J-21	Q502	F-18
D722	J-20	Q503	F-18
D801	B-9	Q504	F-18
D802	A-9	Q505	F-18
D803	A-9	Q506	F-18
		Q601	C-4
IC101	E-27	Q602	A-5
IC102	D-27	Q603	A-3
IC301	B-14	Q701	J-18
IC302	B-16	Q702	J-19
IC303	B-17	Q703	J-23
IC304	B-18	Q802	B-9
IC320	D-12	Q803	B-10
IC401	E-21		

Note:
- ○——— : parts extracted from the component side.
- ● : Through hole.
- ▒ : Pattern on the side which is seen.
- ▒ : Pattern of the rear side.

CND : Canadian

AUS : Australian

C910 : CDP-C910

C90ES : CDP-C90ES

5-1. PRINTED WIRING BOARDS

● Refer to page 20,21 for Circuit Boards Location and Semiconductor Lead Layouts.

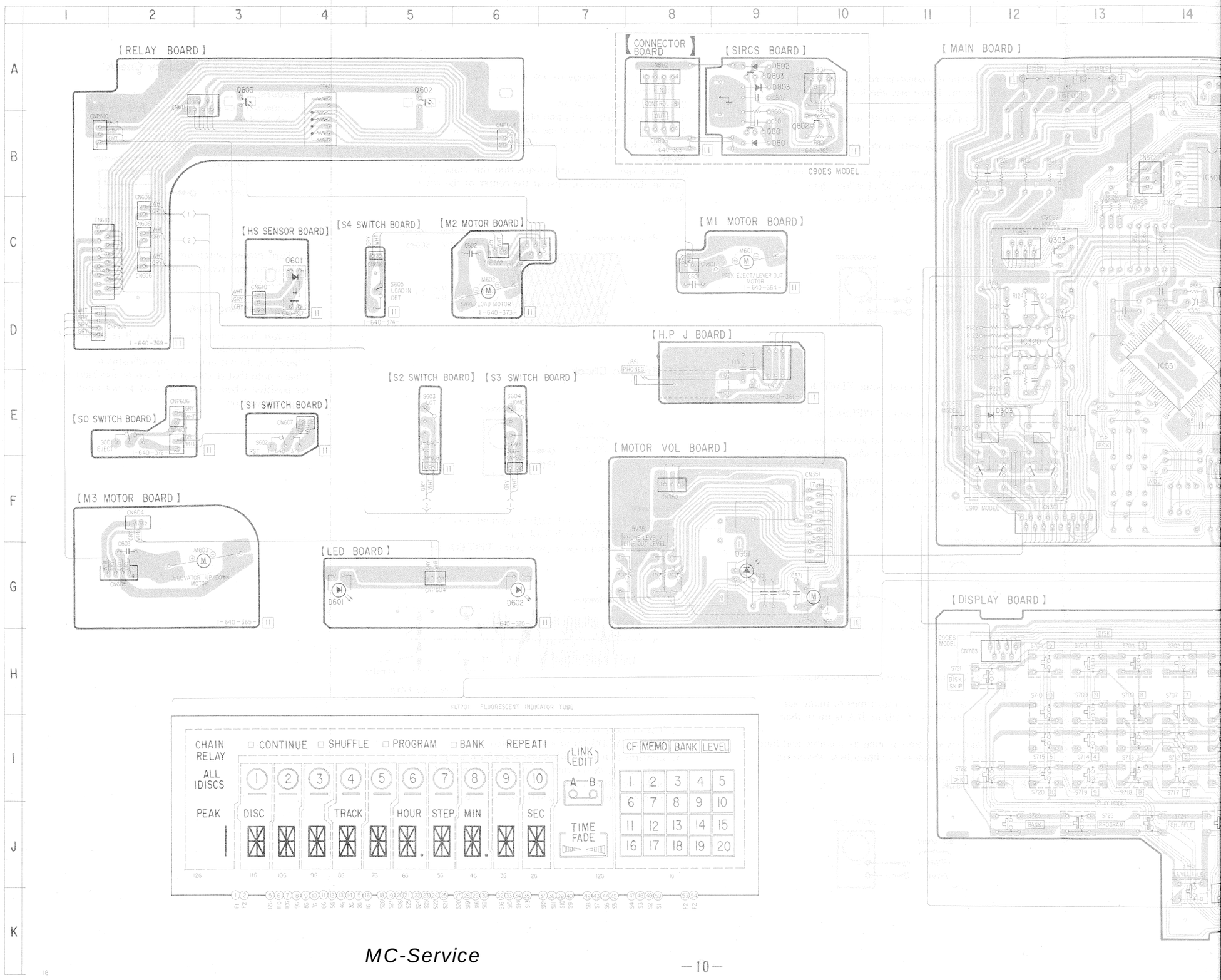

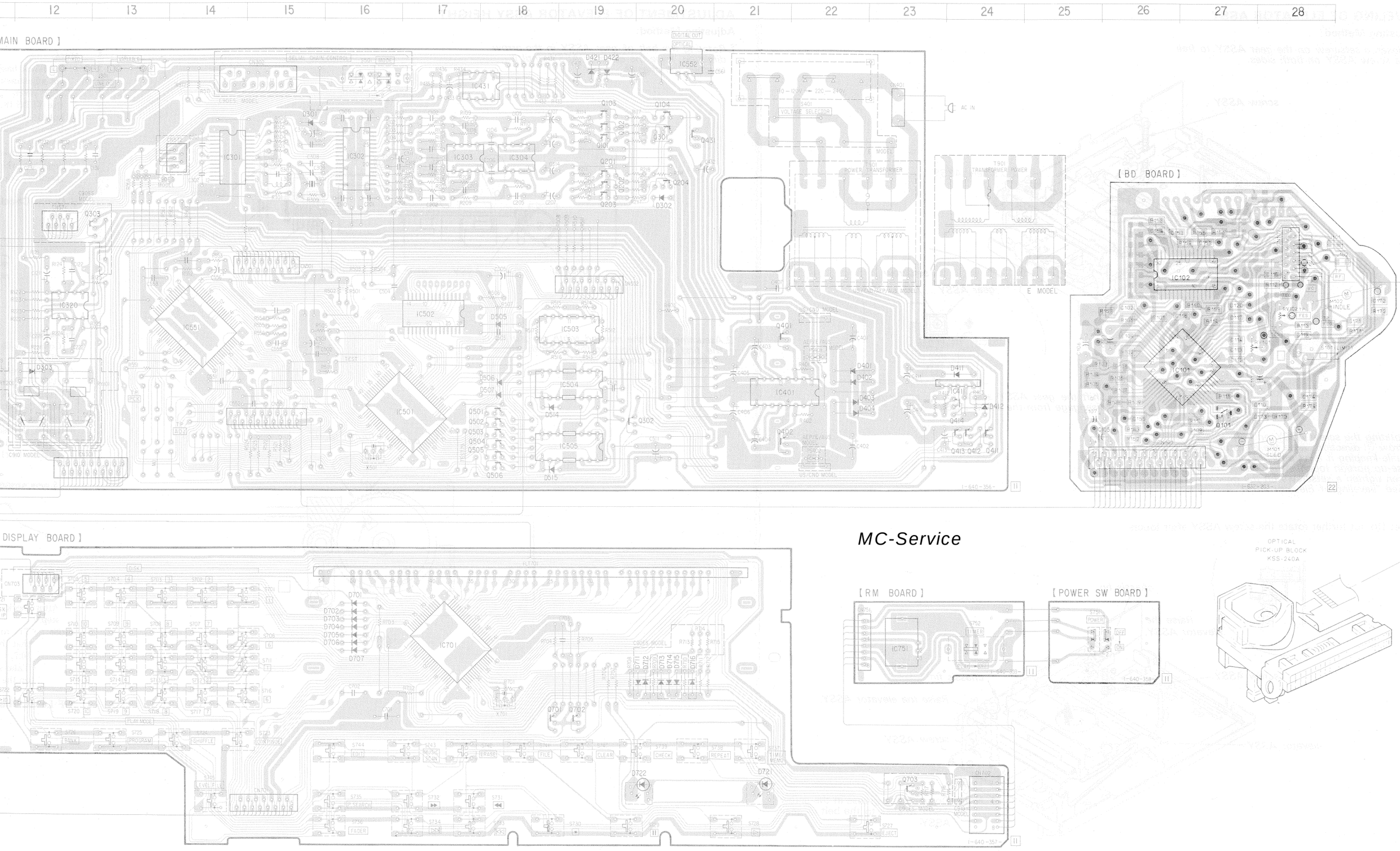
MAIN BOARD
DISPLAY BOARD
BD BOARD
RM BOARD
POWER SW BOARD
OPTICAL PICK-UP BLOCK KSS-240A
E MODEL
AC IN
VOLTAGE SELECTOR
POWER TRANSFORMER
MC-Service

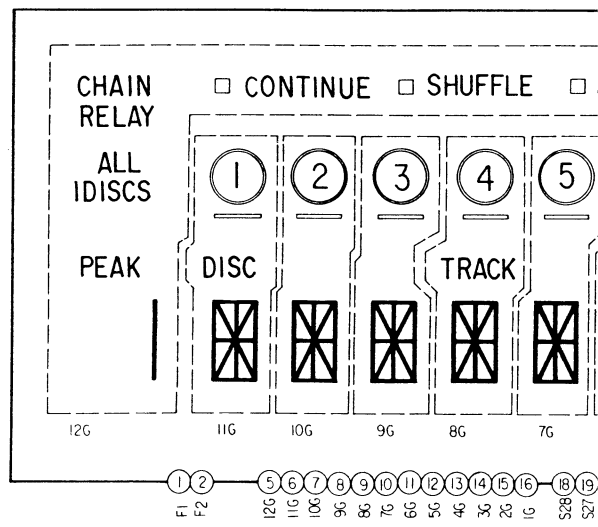

5-2. SCHEMATIC DIAGRAM MAIN Section

• Refer to page 20,21 for Circuit Boards Location and Semiconductor Lead Layouts.

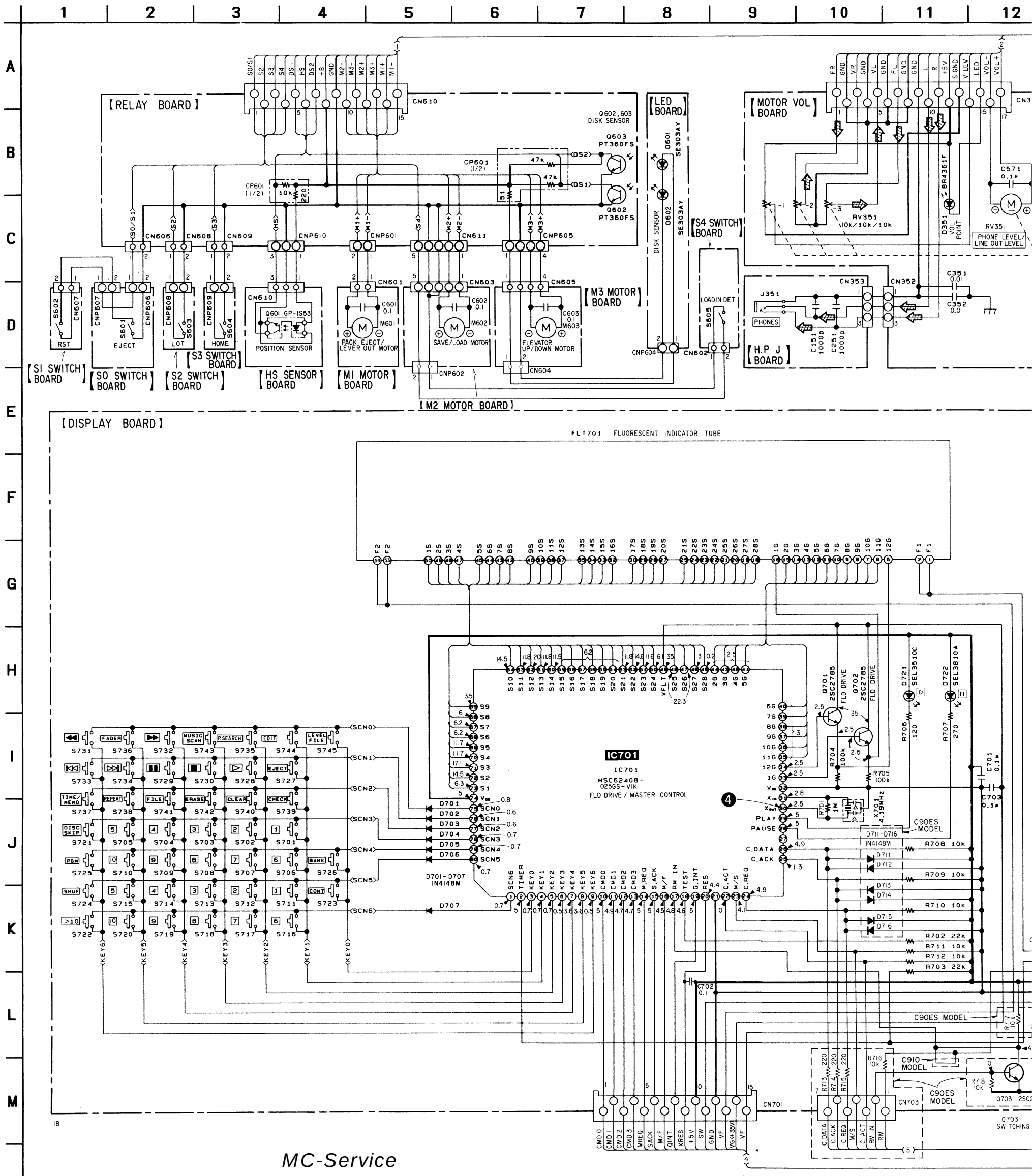

FLT701 FLUORESCENT INDICATOR TUBE

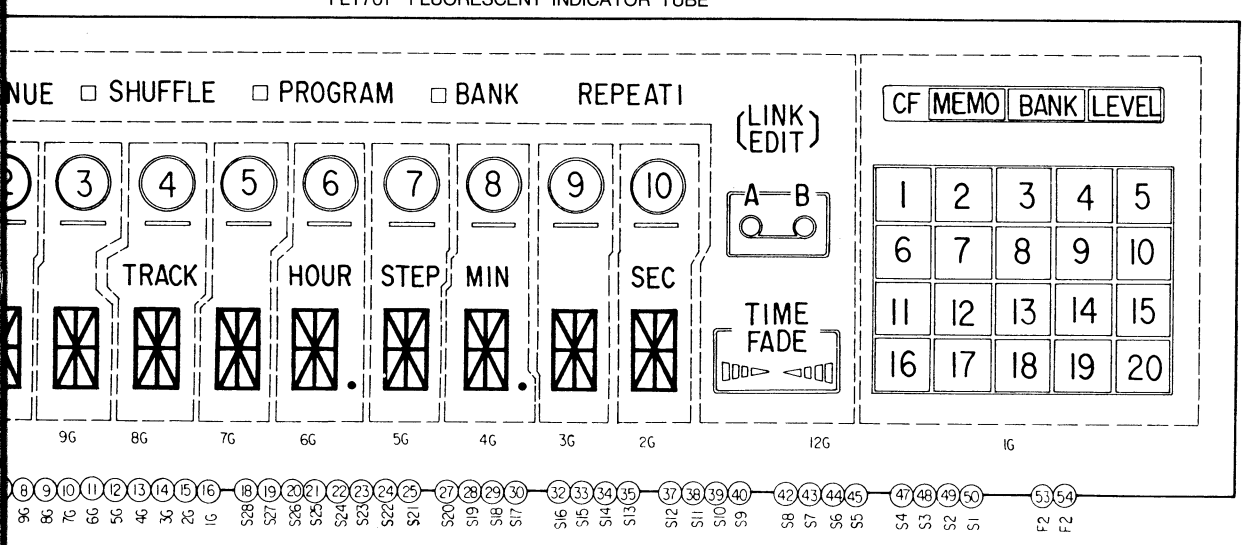

Note:

- All capacitors are in μF unless otherwise noted. pF: 50WV or less are not indicated except for electroly and tantalums.
- All resistors are in Ω and 1/4W or less unless other specified.
- % : indicates tolerance.
- △ : internal component.

Note:	Note:
The components identified by mark ⚠ or dotted line with mark ⚠ are critical for safety. Replace only with part number specified.	Les composants identifiés p une marque ⚠ sont critiqu pour la sécurité. Ne les remplacer que par u pièce portant le numéro spé fié.

- ▬▬ : B+ Line
- ▬ ▬ : B− Line
- ▭ : adjustment for repair.
- Voltage and waveforms are dc with respect to grc under no-signal (detuned) conditions.
  no mark : Stop mode
  *: Impossible to measure the voltage at the marked p

uctor Lead Layouts.

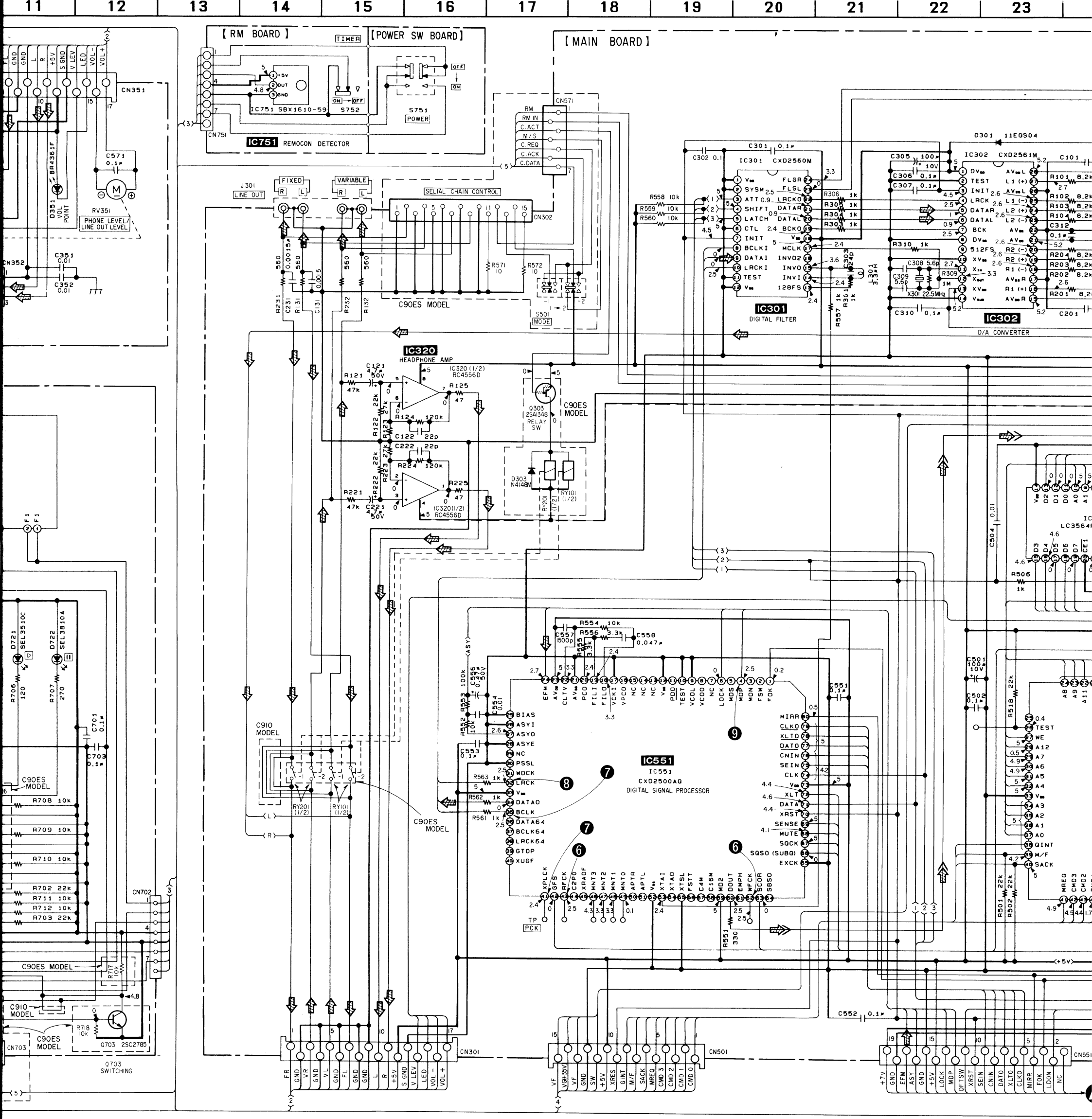

μF unless otherwise noted. pF: μμF
ot indicated except for electrolytics

Ω and ¼W or less unless otherwise

erance.
nponent.

ti- t- ⚠ rt	**Note:** Les composants identifiés par une marque ⚠ sont critiques pour la sécurité. Ne les remplacer que par une pièce portant le numéro spécifié.

for repair.
orms are dc with respect to ground
uned) conditions.

o measure the voltage at the marked points.

- Voltages are taken with a VOM (Input Impedance 10MΩ).
  Voltage variations may be noted due to normal production tolerances.
- Waveforms are taken with a oscilloscope.
  Voltage variations may be noted due to normal production tolerances.
- Circled numbers refer to waveforms.
- Signal path.
  ⇨ : CD
  ⇨ : digital out

CND : Canadian

AUS : Australian

C910 : CDP-C910

C90ES : CDP-C90ES

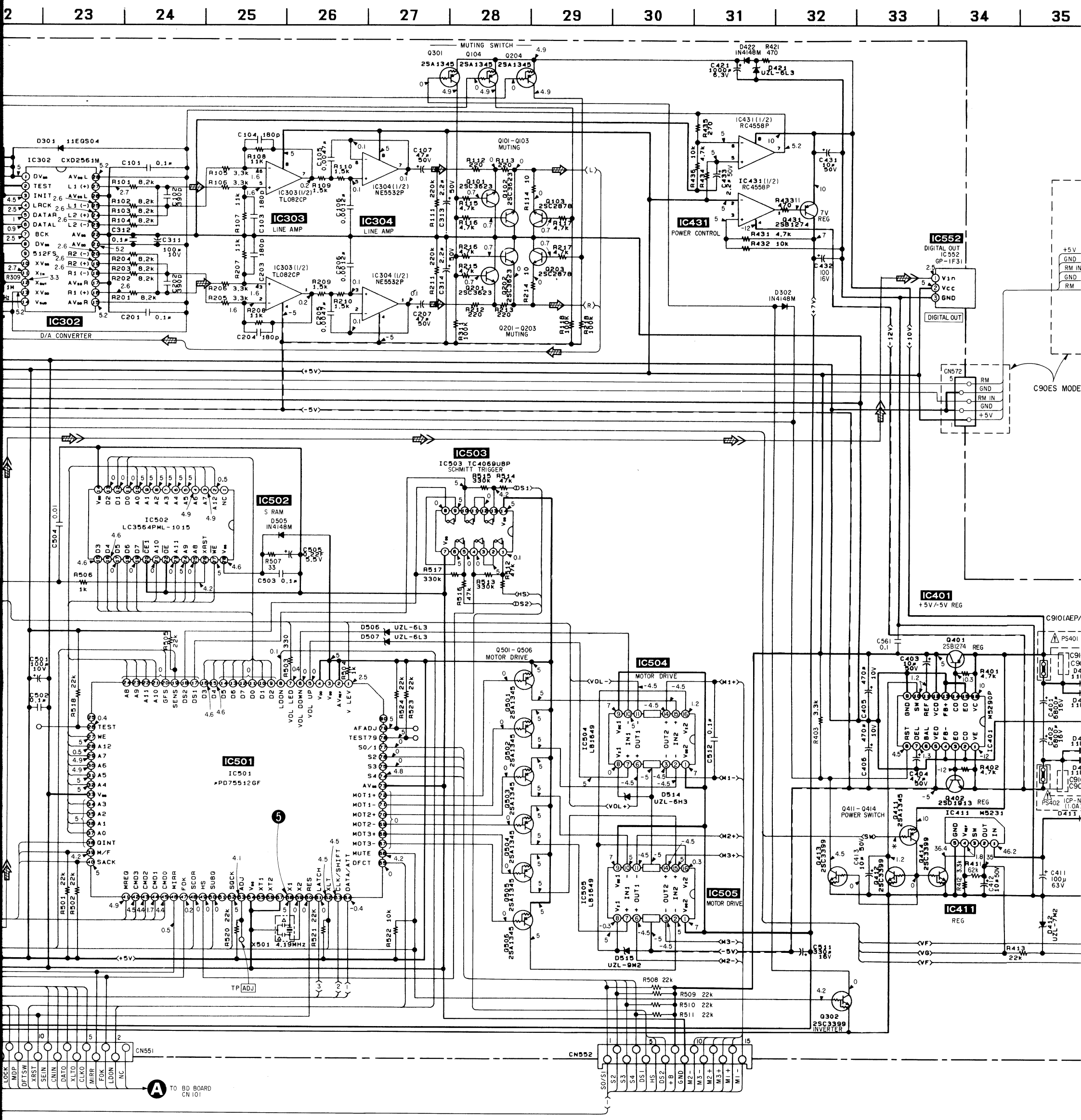

oltages are taken with a VOM (Input Impedance 10MΩ).
oltage variations may be noted due to normal produc-
n tolerances.
aveforms are taken with a oscilloscope.
oltage variations may be noted due to normal produc-
n tolerances.
rcled numbers refer to waveforms.
gnal path.
: CD
: digital out
CND : Canadian
AUS : Australian
C910 : CDP-C910
90ES : CDP-C90ES

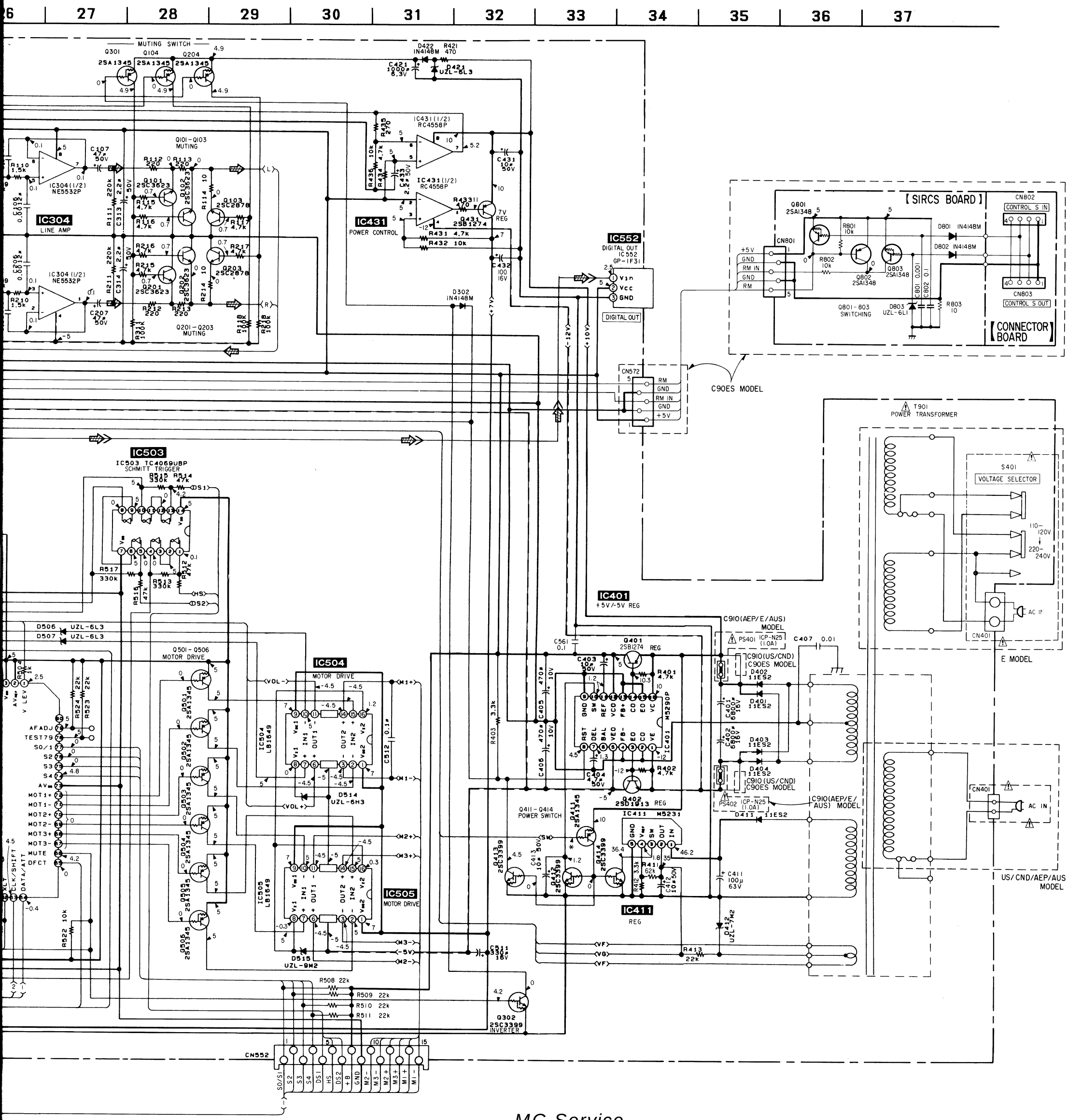

5-3. SCHEMATIC DIAGRAM BD Section

• Refer to page 20,21 for Circuit Boards Location and Semiconductor Lead Layouts.

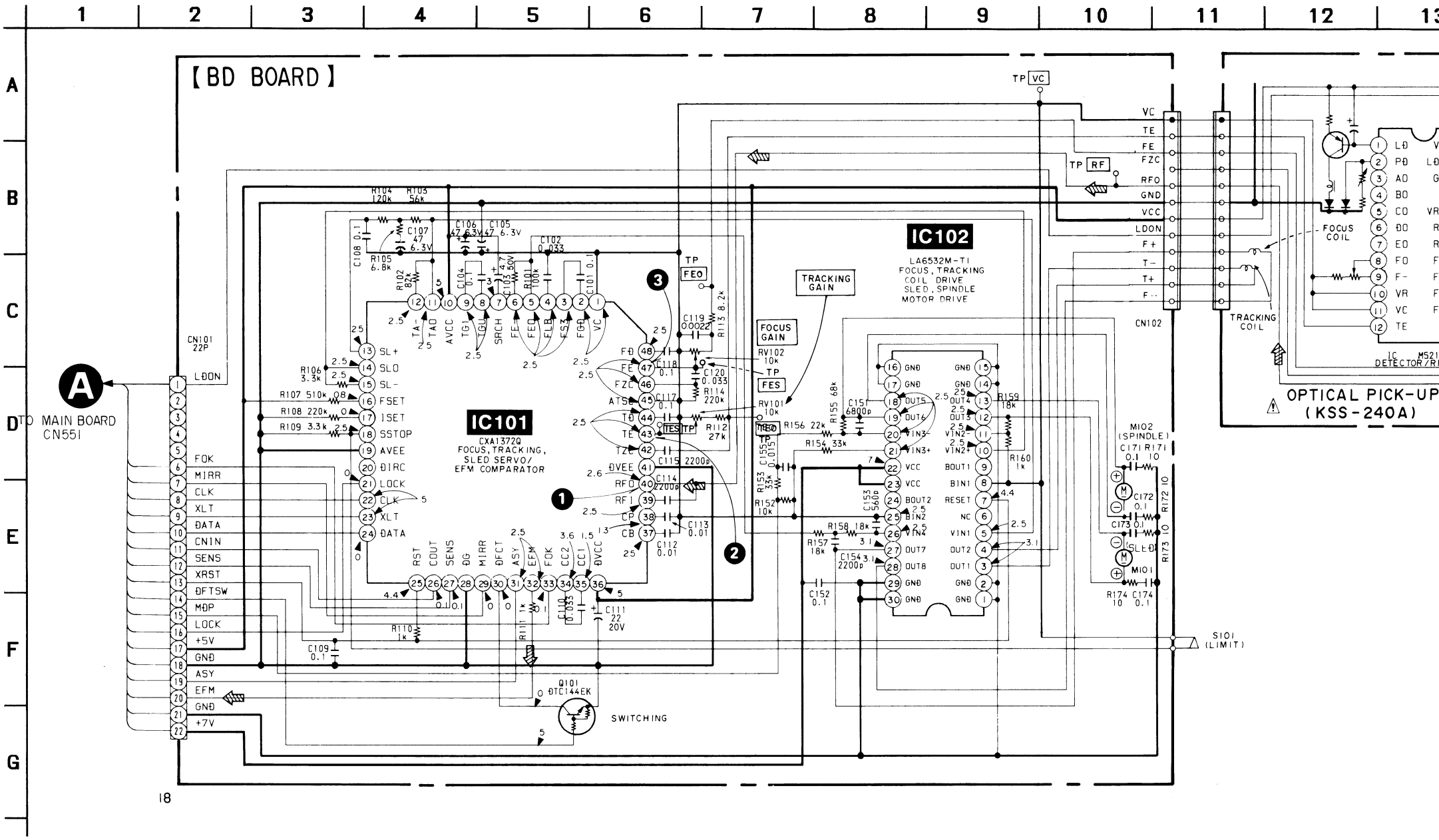

Note:

- All capacitors are in μF unless otherwise noted. pF: μμF 50WV or less are not indicated except for electrolytics and tantalums.
- All resistors are in Ω and 1/4 W or less unless otherwise specified.
- % : indicates tolerance.

Note:	Note:
The components identified by mark ⚠ or dotted line with mark ⚠ are critical for safety. Replace only with part number specified.	Les composants identifiés par une marque ⚠ sont critiques pour la sécurité. Ne les remplacer que par une pièce portant le numéro spécifié.

- ▬ : B+ Line
- ▭ : adjustment for repair.

- Voltage and waveforms are dc with respect to ground under no-signal (detuned) conditions.
  no mark : Stop mode
- Waveforms are taken with a oscilloscope.
  Voltage variations may be noted due to normal production tolerances.
- Circled numbers refer to waveforms.
- Signal path.
  ⇨ : CD

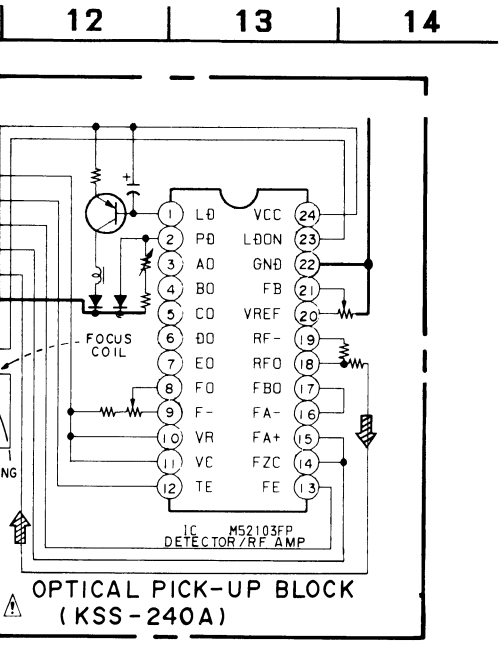

• Circuit Boards Location

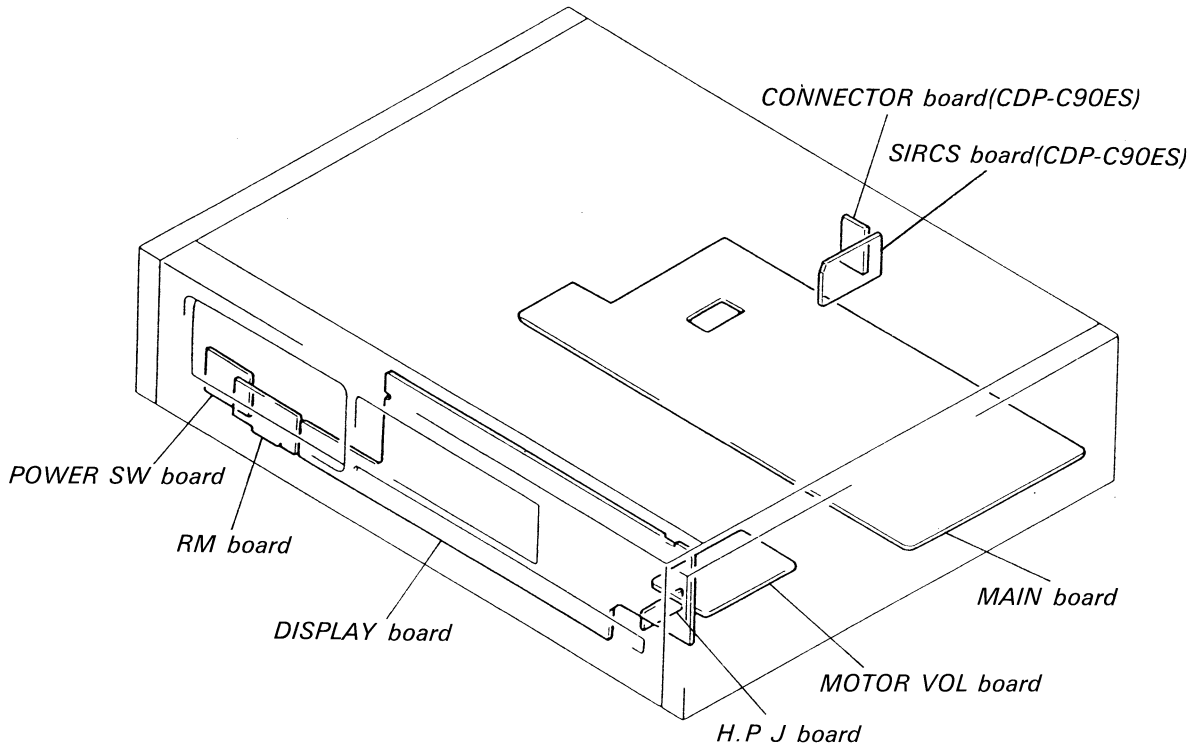

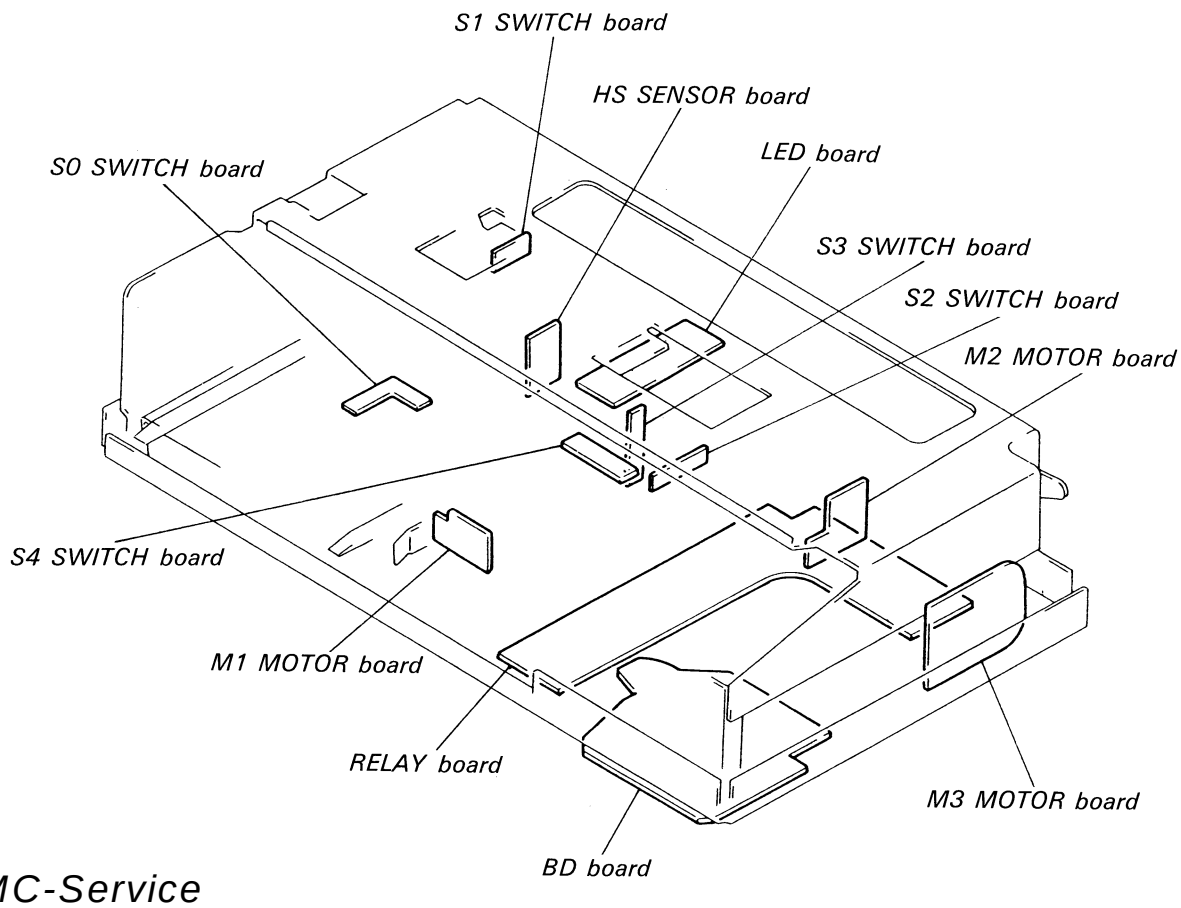

• Semiconductor Lead

CXD2560M

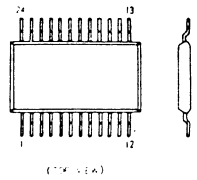

CXD2561M
CXD2561M-1

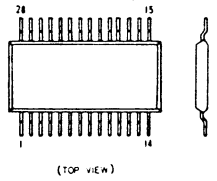

GP-1F31T

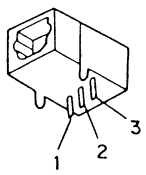

1: D
2: VD
3: GN

LB1649

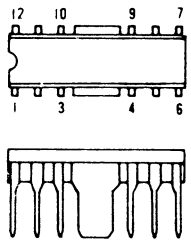

M5231TL

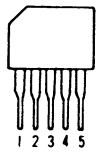

RC4556D

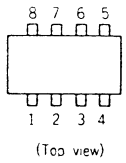

● Semiconductor Lead Layouts

CXD2560M

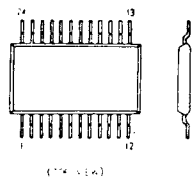

CXD2561M
CXD2561M-1

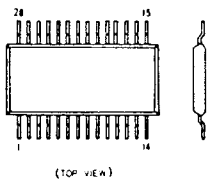

GP-1F31T

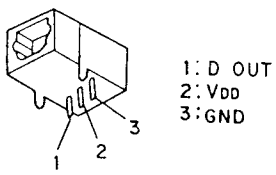

LB1649

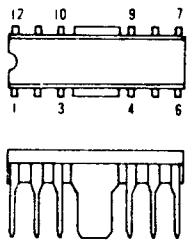

M5231TL

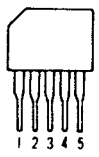

RC4556D

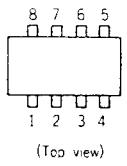

SBX1610-59

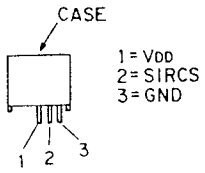

2SB1094-L
2SD1913-RS

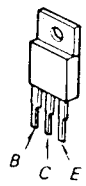

2SB1274SA-RS

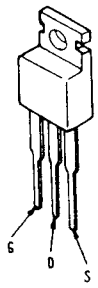

2SC2785-HFE

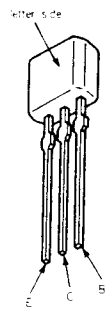

2SC2878-AB

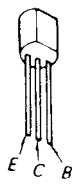

2SC3623A-LK
DTA114ES
DTA144ES
DTC144ES

GP-1S53

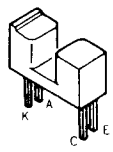

11EQS04
11ES2
1SS120
HZS6C3L
SLR-54GG4-L
UZL-6L1
UZL-6L3
UZL-9M2

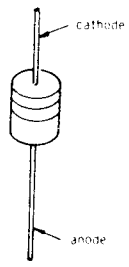

BR4361F

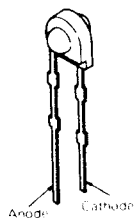

SEL3510C-TH12
SEL3810A-TH12

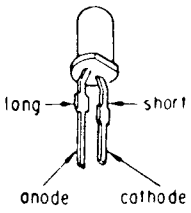

● IC Block Diagrams

IC504,505 LB1649

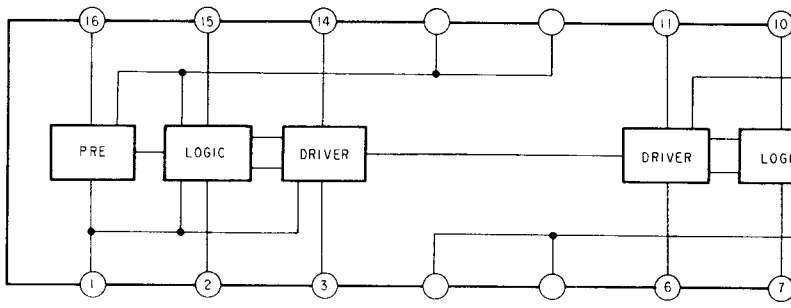

IC401 M5290P-16

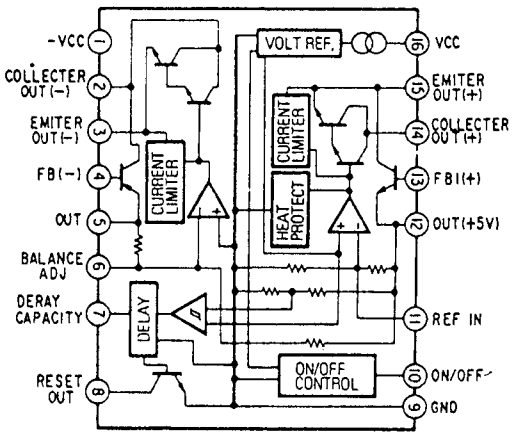

IC102 LA

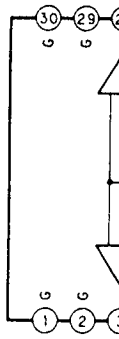

IC411 M5231TL

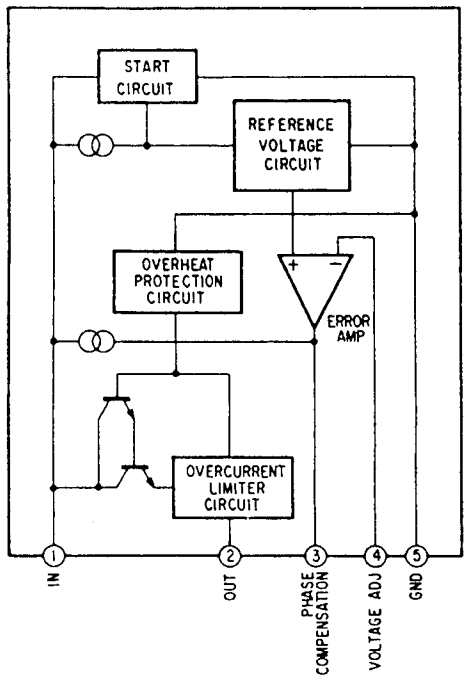

MC-Service

0-59

1 = VDD
2 = SIRCS
3 = GND

4-L
3-RS

4SA-RS

5-HFE

8-AB

2SC3623A-LK
DTA114ES
DTA144ES
DTC144ES

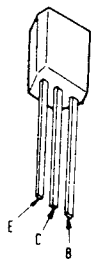

GP-1S53

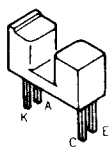

11EQS04
11ES2
1SS120
HZS6C3L
SLR-54GG4-L
UZL-6L1
UZL-6L3
UZL-9M2

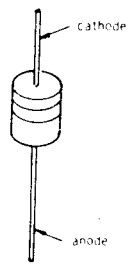

BR4361F

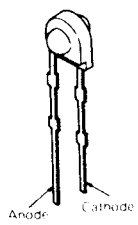

SEL3510C-TH12
SEL3810A-TH12

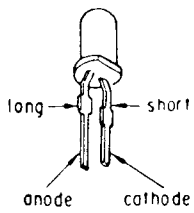

● IC Block Diagrams

IC504,505 LB1649

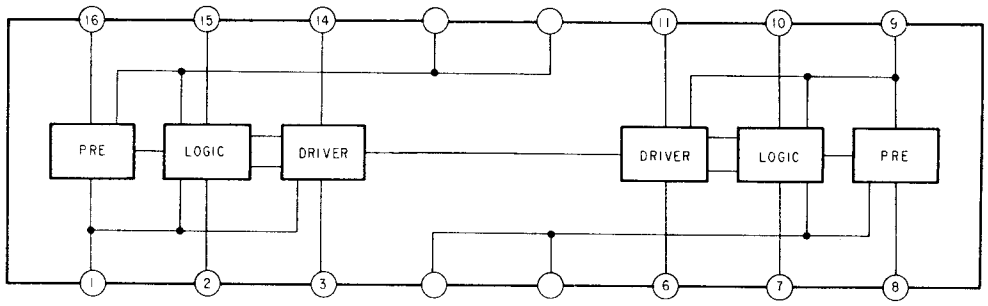

IC401 M5290P-16

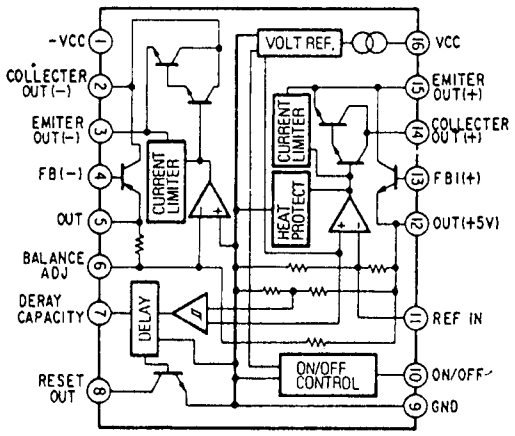

IC102 LA6532M

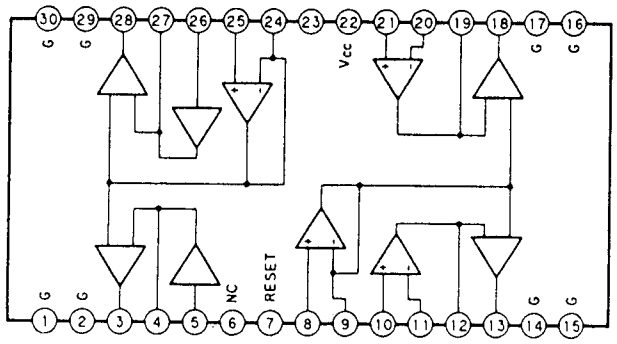

IC411 M5231TL

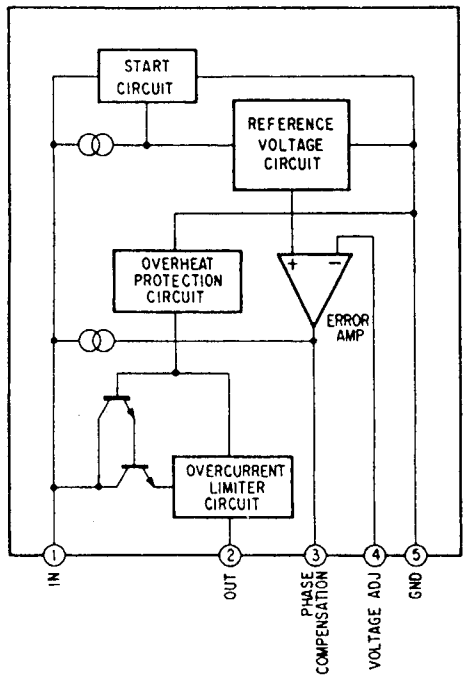

MC-Service

5-4. WAVEFORMS

❶

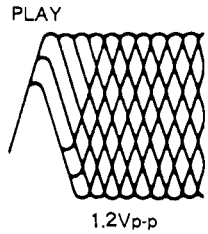

IC101 (40) PLAY (RF)

❷

IC101 (43) PLAY (TES)

❸

IC101 (47) PLAY (FES)

❹

❺

❻

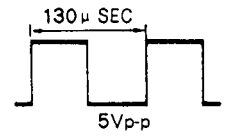

❼

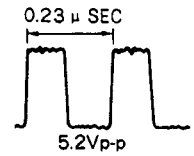

❽

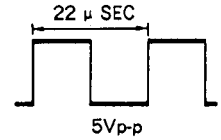

❾

IC301 (4) PLAY (MDP)

MC-Service

SECTION 6
EXPLODED VIEWS

NOTE:
- -XX, -X mean standardized parts, so they may have some differences from the original one.
- Color Indication of Appearance Parts
  Example:
  KNOB, BALANCE(WHITE)...(RED)
  ↑ Parts color ↑ Cabinet's color

- Items marked " * " are not stocked since they are seldom required for routine service. Some delay should be anticipated when ordering these items.
- The mechanical parts with no reference number in the exploded views are not supplied.
- hardware (#mark) list is given in the last of this parts list.

The components identified by mark ⚠ or dotted line with mark ⚠ are critical for safety.
Replace only with part number specified.

Les composants identifiés par une marque ⚠ sont critiques pour la sécurité.
Ne les remplacer que par une pièce portant le numéro spécifié.

AUS:Australian
C910:CDP-C910
C90ES:CDP-C90ES

6-1. FRONT PANEL ASSEMBLY

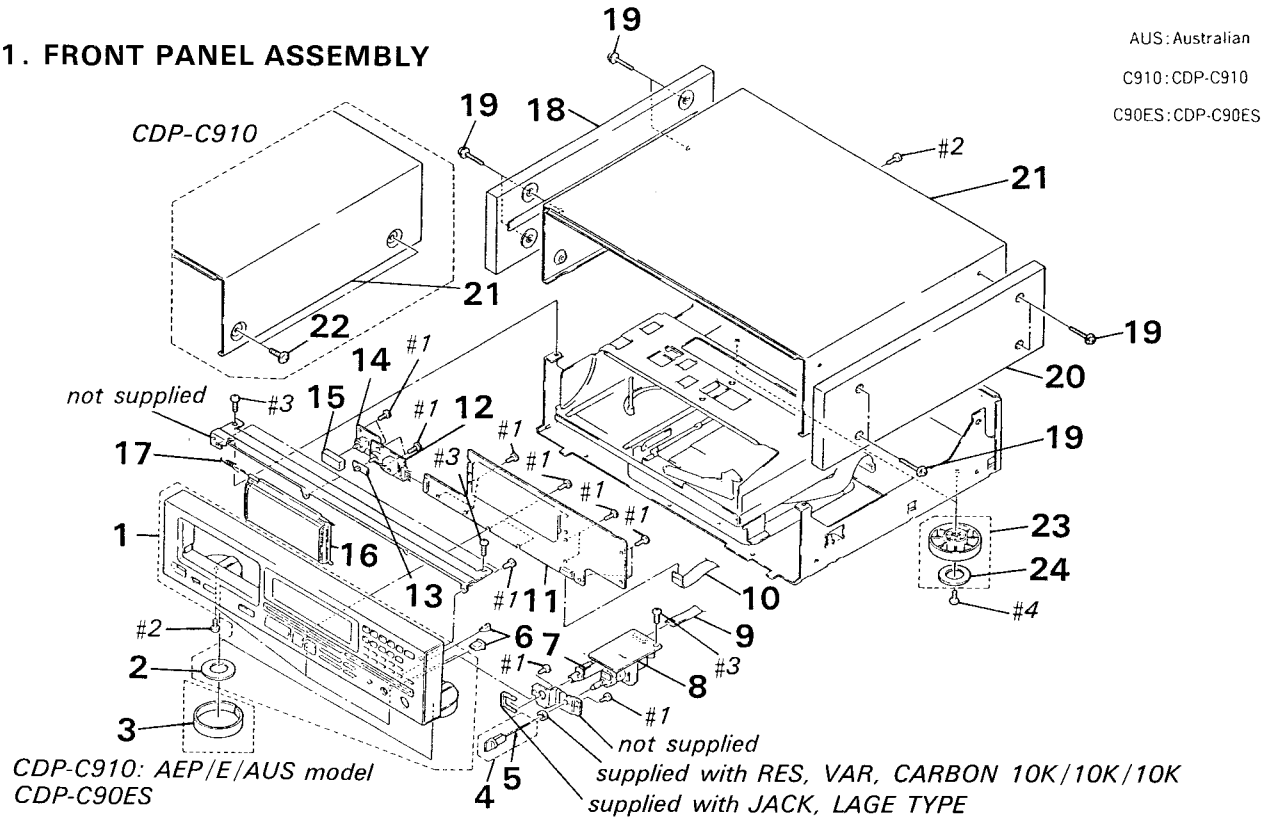

Ref. No.	Part No.	Description	Remark
1	X-4941-764-1	PANEL ASSY, FRONT (C910:US, Canadian)	
1	X-4941-767-1	PANEL ASSY, FRONT (C90ES)	
1	X-4941-768-1	PANEL ASSY, FRONT (C910:AEP, E, AUS)	
2	4-926-391-01	FOOT (FELT)	
3	4-926-398-01	PLATE, ORNAMENTAL (C910:AEP, E, AUS/C90ES)	
4	A-4604-869-A	KNOB (HP) ASSY	
5	4-922-979-41	INDICATOR	
6	4-941-079-01	BUTTON (20 KEY)	
7	* 1-640-361-11	H.P J BOARD	
8	* 1-640-360-11	MOTOR VOL BOARD	
9	1-575-218-11	WIRE, FLAT TYPE (17 CORE)	
10	1-690-113-11	WIRE, FLAT TYPE (15 CORE)	
11	* A-4617-923-A	DISPLAY BOARD, COMPLETE (C90ES)	
11	* A-4617-929-A	DISPLAY BOARD, COMPLETE (C910)	
12	* 1-640-359-11	RM BOARD	
13	4-922-518-11	KNOB (TIMER)	
14	* 1-640-358-11	POWER SW BOARD	
15	4-922-921-01	BUTTON (POWER)	
16	4-946-204-01	PANEL (M) (C910)	
16	4-946-204-11	PANEL (M) (C90ES)	
17	4-924-499-01	SPRING	
18	X-4941-769-1	PLAET (L) ASSY, SIDE, ORNAMENTAL (C90ES)	
19	4-885-979-11	SCREW (4X25) (C90ES)	
20	X-4941-770-1	PLAET (R) ASSY, SIDE, ORNAMENTAL (C90ES)	
21	* 4-934-043-21	CASE (C910)	
21	4-934-043-61	CASE (C90ES)	
22	4-847-802-00	SCREW (C910)	
23	X-3304-938-2	FOOT ASSY (C910:AEP, E, AUS/C90ES)	
23	X-4885-950-1	FOOT ASSY (C910:US, Canadian)	
24	4-923-836-11	CUSHION	

MC-Service

6-2. CHASSIS ASSEMBLY

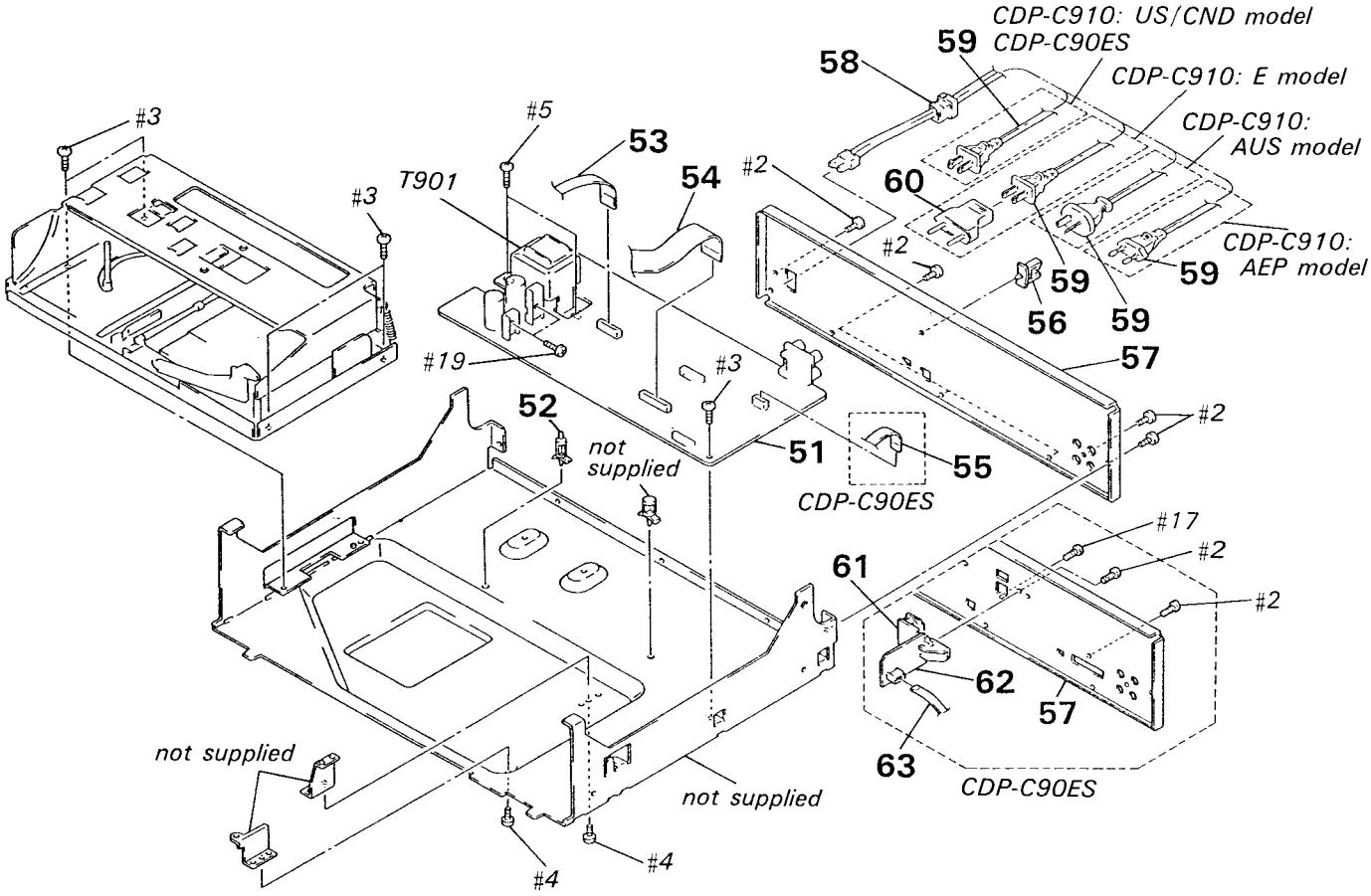

Ref. No.	Part No.	Description	Remark
51	* A-4617-922-A	MAIN BOARD, COMPLETE (C90ES)	
51	* A-4617-926-A	MAIN BOARD, COMPLETE (C910:AEP, AUS)	
51	* A-4617-927-A	MAIN BOARD, COMPLETE (C910:US, Canadian)	
51	* A-4617-928-A	MAIN BOARD, COMPLETE (C910:E)	
52	* 3-346-265-11	HOLDER, PC BOARD	
53	1-575-664-11	WIRE, FLAT TYPE (15 CORE)	
54	1-535-944-11	JUMPER, FILM (WITH TERMINAL)	
55	1-690-114-11	WIRE, FLAT TYPE (7 CORE) (C90ES)	
57	* 4-945-368-11	PANEL, BACK (C910:US, Canadian)	
57	* 4-945-368-31	PANEL, BACK (C910:AEP)	
57	* 4-945-368-41	PANEL, BACK (C910:E)	
57	* 4-945-368-51	PANEL, BACK (C910:AUS)	
57	* 4-945-368-61	PANEL, BACK (C90ES)	

Ref. No.	Part No.	Description	Remark
58	* 3-703-244-00	BUSHING (2104), CORD (C910:US, Canadian, AEP, AUS/C90ES)	
58	* 3-703-571-11	BUSHING (S) (4516), CORD (C910:E)	
59	⚠ 1-574-358-31	CORD, POWER (WITH CONNECTOR) (C910:AUS)	
59	⚠ 1-575-651-21	CORD, POWER (C910:AEP)	
59	⚠ 1-575-653-21	CORD, POWER (C910:E)	
59	⚠ 1-590-926-11	CORD, POWER (C910:US, Canadian/C90ES)	
60	⚠ 1-569-007-11	ADAPTER, CONVERSION 2P (C910:E)	
61	* 1-640-363-11	CONNECTOR BOARD (C90ES)	
62	* 1-640-362-11	SIRCS BOARD (C90ES)	
63	1-590-031-11	WIRE, FLAT TYPE (5 CORE) (C90ES)	
T901	⚠ 1-450-614-11	TRANSFORMER, POWER (C910:US, Canadian/C90ES)	
T901	⚠ 1-450-615-11	TRANSFORMER, POWER (C910:AEP, AUS)	
T901	⚠ 1-450-616-11	TRANSFORMER, POWER (C910:E)	

MC-Service

Note:
The components identified by mark ⚠ or dotted line with mark ⚠ are critical for safety. Replace only with part number specified.

Note:
Les composants identifiés par une marque ⚠ sont critiques pour la sécurité. Ne les remplacer que par une pièce portant le numéro spécifié.

6-3. MD SECTION-1 (CDM10-5BD7)

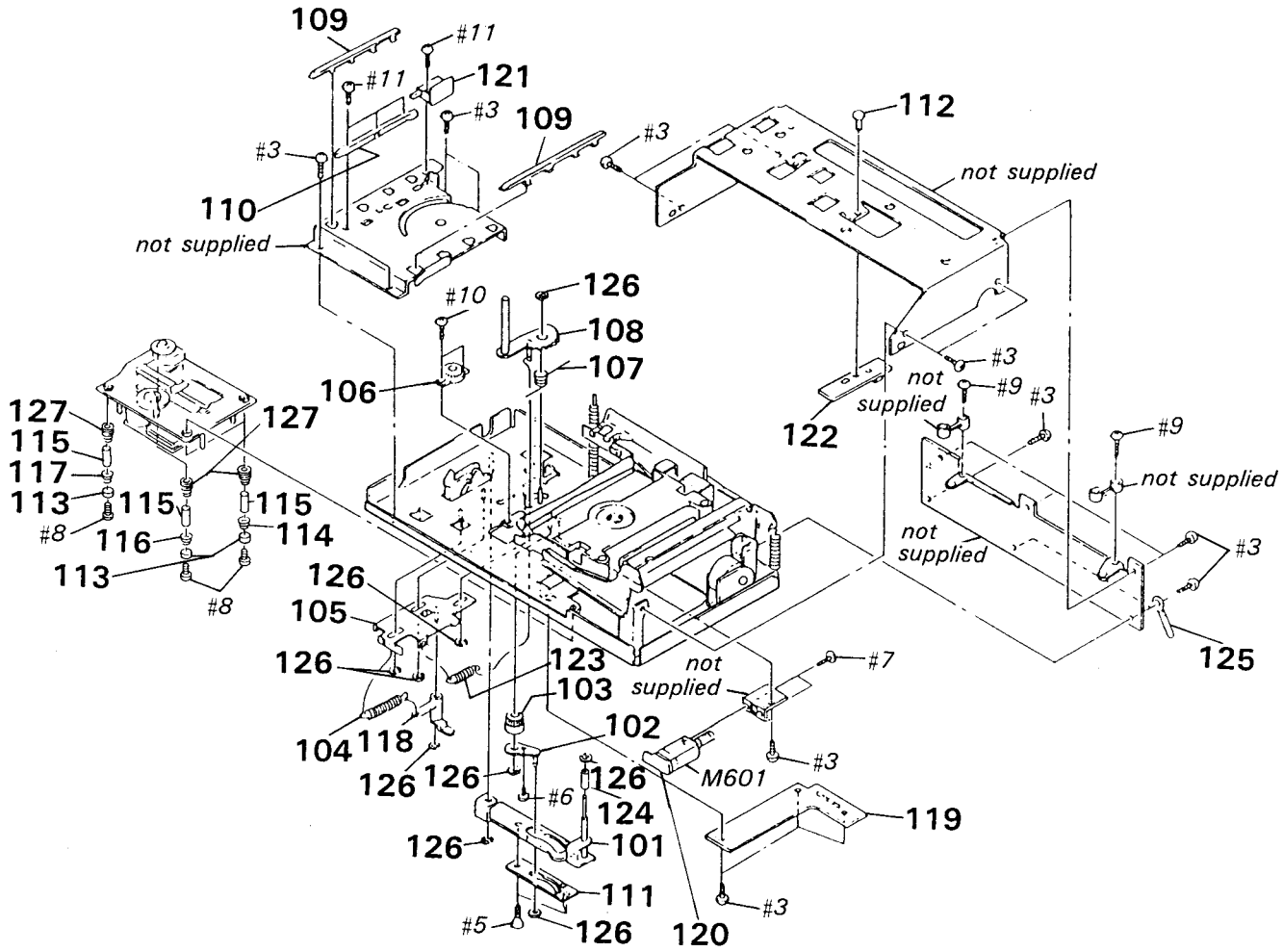

MC-Service

Ref. No.	Part No.	Description	Remark
101	* X-4917-728-1	LEVER (D1) ASSY	
102	X-4917-733-1	LEVER (G) ASSY	
103	4-926-230-11	GEAR (P1)	
104	4-926-213-01	SPRING (1), TENSION	
105	X-4941-772-1	SLIDER (A) ASSY	
106	3-319-224-31	DAMPER, SMALL	
107	4-926-208-01	SPRING (EJECT)	
108	X-4917-729-1	LEVER (E) ASSY	
109	4-926-246-01	RAIL	
110	* 4-926-247-01	GUIDE	
111	* 4-926-210-11	LEVER (D2)	
112	3-531-576-11	RIVET	
113	4-917-508-01	HOLDER, SP	
114	4-917-507-01	SPRING (H)	
115	* 4-926-249-01	COLLAR	
116	4-917-541-01	SPRING (B)	
117	4-918-669-01	SPRING (W)	
118	4-926-244-01	LEVER (EJECT)	
119	* 1-640-369-11	RELAY BOARD	
120	* 1-640-364-11	M1 MOTOR BOARD	
121	* 1-640-371-11	S1 SWITCH BOARD	
122	* 1-640-370-11	LED BOARD	
123	4-926-201-01	SPRING (2), TENSION	
124	* 4-927-507-01	ROLLER (D)	
125	* 3-701-822-00	HOLDER, WIRE	
126	3-701-439-01	WASHER	
127	4-917-562-01	INSULATOR	
M601	A-4608-356-A	MOTOR ASSY, M1 (PACK EJECT/LEVER OUT)	

6-4. MD SECTION-2 (CDM10-5BD7)

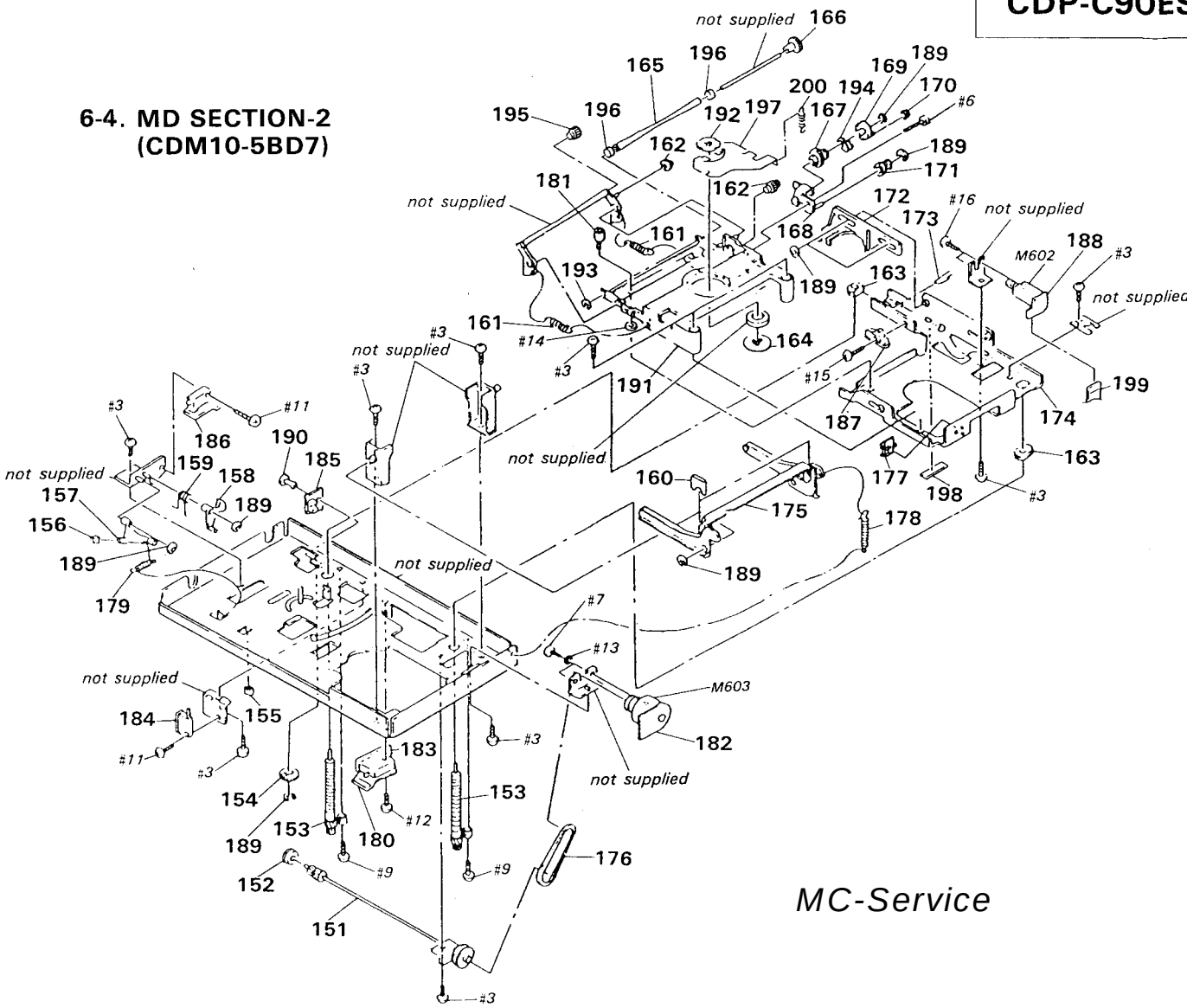

MC-Service

Ref. No.	Part No.	Description	Remark
151	A-4675-265-A	GEAR ASSY	
152	4-926-211-01	BEARING	
153	* A-4675-264-A	SCREW ASSY	
154	4-926-232-01	GEAR (S)	
155	4-887-175-00	RUBBER, STOPPER	
156	4-926-215-01	HOLDER	
157	4-926-209-01	LEVER (STOP)	
158	4-926-245-01	LEVER (P)	
159	4-920-299-01	SPRING (LOCK)	
160	* 4-927-508-01	SPACER	
161	4-926-214-01	SPRING (3), TENSION	
162	4-926-235-11	GEAR (R3)	
163	4-926-241-01	HOLDER (E2)	
164	4-921-022-01	PULLEY, CHUCKING	
165	3-323-231-02	ROLLER (LOWER)	
166	4-926-233-11	GEAR (R1)	
167	4-926-234-11	GEAR (R2)	
168	X-4941-771-1	HOLDER (G) ASSY	
169	4-926-239-11	GEAR (R7)	
170	4-926-250-01	ROLLER (S)	
171	4-926-238-11	GEAR (R6)	
172	4-920-289-01	SLIDER (B)	
173	4-920-298-01	SPRING (CLIP)	
174	* X-4917-738-4	CHASSIS (E) ASSY	
175	* A-4675-256-A	ARM ASSY	
176	4-920-288-01	BELT	
177	* 4-927-599-01	STOPPER	
178	4-926-202-01	SPRING (4), TENSION	
179	4-926-203-01	SPRING (5), TENSION	
180	* 4-926-590-01	HOLDER (S)	
181	4-932-901-01	BOLT (SPECIAL), HEXAGON SOCKET	
182	* 1-640-365-11	M3 MOTOR BOARD	
183	* 1-640-368-11	S2 SWITCH BOARD	
184	* 1-640-366-11	S3 SWITCH BOARD	
185	* 1-640-367-11	HS SENSOR BOARD	
186	* 1-640-372-11	S0 SWITCH BOARD	
187	* 1-640-374-11	S4 SWITCH BOARD	
188	* 1-640-373-11	M2 MOTOR BOARD	
189	4-926-219-01	RING (DIA. 2.3), RETAINING	
190	3-531-576-11	RIVET	
191	X-4917-777-1	ESCUTCHEON (2) ASSY	
192	4-921-029-01	YOKE, CHUCKING	
193	4-926-218-01	RING (DIA. 2), RETAINING	
194	A-4675-276-A	GEAR ASSY, PLANET	
195	4-926-236-11	GEAR (R4)	
196	4-932-905-01	ROLLER	
197	* 4-932-904-01	ARM	
198	3-831-441-XX	CUSHION (B), CABINET	
199	1-690-115-11	WIRE, FLAT TYPE	
200	4-932-906-01	SPRING (ARM), TENSION	
M602	A-4608-360-A	MOTOR ASSY, M2 (SAVE/LOAD)	
M603	A-4608-358-A	MOTOR ASSY, M3 (ELEVATOR UP/DOWN)	

6-5. OPTICAL PICK-UP BLOCK (BU-5BD7)

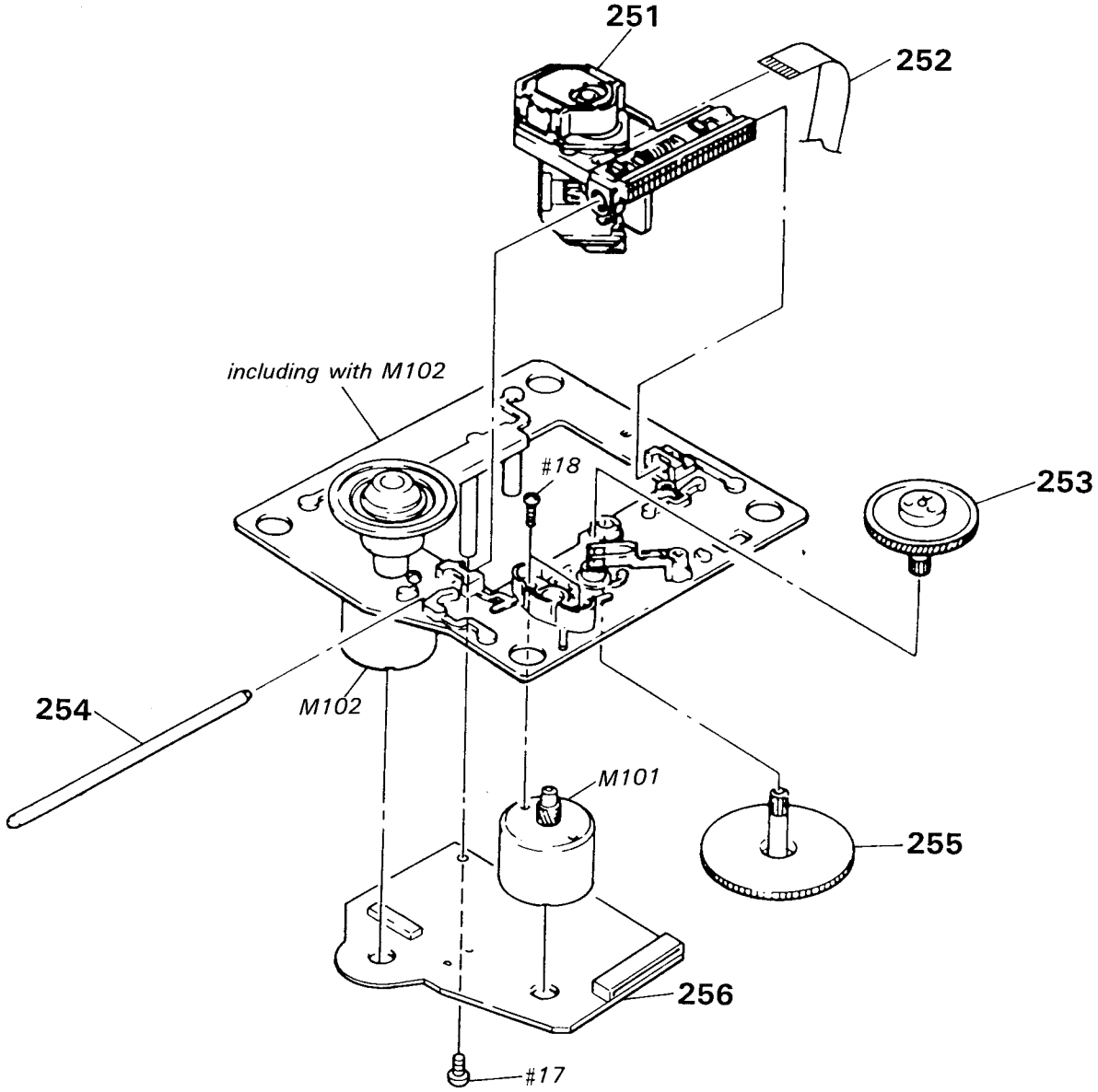

MC-Service

Ref. No.	Part No.	Description	Remark
251	8-848-144-11	PICK-UP, OPTICAL KSS-240A	
252	1-575-001-11	WIRE, FLAT TYPE (12 CORE)	
253	4-917-567-01	GEAR (M)	
254	4-917-565-01	SHAFT, SLED	
255	4-917-564-01	GEAR (P), FLATNESS	
256	* A-4617-371-A	BD BOARD, COMPLETE	
M101	X-4917-504-1	MOTOR ASSY (SLED)	
M102	X-4917-523-3	MOTOR ASSY (SPINDLE)	

SECTION 7
ELECTRICAL PARTS LIST

BD

NOTE:
- Due to standardization, replacements in the parts list may be different from the parts specified in the diagrams or the components used on the set.
- -XX, -X mean standardized parts, so they may have some differences from the original one.
- RESISTORS
  All resistors are in ohms
  METAL:Metal-film resistor
  METAL OXIDE:Metal Oxide-film resistor
  F:nonflammable
- Items marked " * " are not stocked since they are seldom required for routine service. Some delay should be anticipated when ordering these items.
- SEMICONDUCTORS
  In each case, u:μ , for example:
  uA...: μA..., uPA...: μPA...,
  uPB...: μPB..., uPC...: μPC...,
  uPD...: μPB...
- CAPACITORS
  uF: μF
- COILS
  uH: μH

When indication parts by reference number, please include the board name.

The components identified by mark ⚠ or dotted line with mark ⚠ are critical for safety.
Replace only with part number specified.

Les composants identifiés par une marque ⚠ sont critiques pour la sécurité.
Ne les remplacer que par une pièce portant le numéro spécifé.

AUS:Australian

C910:CDP-C910

C90ES:CDP-C90ES

Ref. No.	Part No.	Description			Remark
	* A-4617-371-A	BD BOARD, COMPLETE			
		**********			
		< CAPACITOR >			
C101	1-163-038-00	CERAMIC CHIP	0.1uF		25V
C102	1-163-989-11	CERAMIC CHIP	0.033uF	10%	25V
C103	1-126-163-11	ELECT	4.7uF	20%	50V
C104	1-163-038-00	CERAMIC CHIP	0.1uF		25V
C105	1-126-154-11	ELECT	47uF	20%	6.3V
C106	1-126-154-11	ELECT	47uF	20%	6.3V
C107	1-126-154-11	ELECT	47uF	20%	6.3V
C108	1-163-038-00	CERAMIC CHIP	0.1uF		25V
C109	1-163-038-00	CERAMIC CHIP	0.1uF		25V
C110	1-163-989-11	CERAMIC CHIP	0.033uF	10%	25V
C111	1-131-367-00	TANTALUM	22uF	10%	20V
C112	1-164-232-11	CERAMIC CHIP	0.01uF		50V
C113	1-164-232-11	CERAMIC CHIP	0.01uF		50V
C114	1-164-161-11	CERAMIC CHIP	0.0022uF	10%	100V
C115	1-164-161-11	CERAMIC CHIP	0.0022uF	10%	100V
C117	1-163-038-00	CERAMIC CHIP	0.1uF		25V
C118	1-163-038-00	CERAMIC CHIP	0.1uF		25V
C119	1-164-161-11	CERAMIC CHIP	0.0022uF	10%	100V
C120	1-163-989-11	CERAMIC CHIP	0.033uF	10%	25V
C151	1-163-019-00	CERAMIC CHIP	0.0068uF	10%	50V
C152	1-163-038-00	CERAMIC CHIP	0.1uF		25V
C153	1-163-006-11	CERAMIC CHIP	560PF	10%	50V
C154	1-164-161-11	CERAMIC CHIP	0.0022uF	10%	100V
C155	1-163-023-00	CERAMIC CHIP	0.015uF	5%	50V
C171	1-163-038-00	CERAMIC CHIP	0.1uF		25V
C172	1-163-038-00	CERAMIC CHIP	0.1uF		25V
C173	1-163-038-00	CERAMIC CHIP	0.1uF		25V
C174	1-163-038-00	CERAMIC CHIP	0.1uF		25V

Ref. No.	Part No.	Description			Remark
		< CONNECTOR >			
CN101	1-568-796-11	SOCKET, CONNECTOR 22P			
CN102	1-568-795-11	SOCKET, CONNECTOR 12P			
		< IC >			
IC101	8-752-050-82	IC CXA1372Q			
IC102	8-759-822-36	IC LA6532M			
		< JACK >			
J101	1-216-295-00	METAL CHIP	0	5%	1/10W
J102	1-216-295-00	METAL CHIP	0	5%	1/10W
		< MOTOR >			
M101	X-4917-504-1	MOTOR ASSY (SLED)			
M102	X-4917-523-3	MOTOR ASSY (SPINDLE)			
		< TRANSISTOR >			
Q101	8-729-901-01	TRANSISTOR DTC144EK			
		< RESISTOR >			
R101	1-216-097-00	METAL CHIP	100K	5%	1/10W
R102	1-216-095-00	METAL CHIP	82K	5%	1/10W
R103	1-216-091-00	METAL CHIP	56K	5%	1/10W
R104	1-216-099-00	METAL CHIP	120K	5%	1/10W
R105	1-216-069-00	METAL CHIP	6.8K	5%	1/10W
R106	1-216-061-00	METAL CHIP	3.3K	5%	1/10W
R107	1-216-114-00	METAL GLAZE	510K	5%	1/10W
R108	1-216-105-00	METAL CHIP	220K	5%	1/10W
R109	1-216-061-00	METAL CHIP	3.3K	5%	1/10W
R110	1-216-049-00	METAL CHIP	1K	5%	1/10W

MC-Service

BD HS SENSOR LED MAIN DISPLAY POWER SW RM MOTOR VOL H.P J SIRCS CONNECTOR

Ref. No.	Part No.	Description				Remark
R111	1-216-049-00	METAL CHIP	1K	5%	1/10W	
R112	1-216-083-00	METAL CHIP	27K	5%	1/10W	
R113	1-216-071-00	METAL CHIP	8.2K	5%	1/10W	
R114	1-216-105-00	METAL CHIP	220K	5%	1/10W	
R152	1-216-073-00	METAL CHIP	10K	5%	1/10W	
R153	1-216-085-00	METAL CHIP	33K	5%	1/10W	
R154	1-216-085-00	METAL CHIP	33K	5%	1/10W	
R155	1-216-093-00	METAL CHIP	68K	5%	1/10W	
R156	1-216-081-00	METAL CHIP	22K	5%	1/10W	
R157	1-216-079-00	METAL CHIP	18K	5%	1/10W	
R158	1-216-079-00	METAL CHIP	18K	5%	1/10W	
R159	1-216-079-00	METAL CHIP	18K	5%	1/10W	
R160	1-216-049-00	METAL CHIP	1K	5%	1/10W	
R171	1-216-001-00	METAL CHIP	10	5%	1/10W	
R172	1-216-001-00	METAL CHIP	10	5%	1/10W	
R173	1-216-001-00	METAL CHIP	10	5%	1/10W	
R174	1-216-001-00	METAL CHIP	10	5%	1/10W	
		< VARIABLE RESISTOR >				
RV101	1-238-016-11	RES, ADJ, CARBON 10K				
RV102	1-238-016-11	RES, ADJ, CARBON 10K				
		< SWITCH >				
S101	1-572-085-11	SWITCH, LEAF (LIMIT)				

****

* 1-640-367-11 HS SENSOR BOARD
****

< TRANSISTOR >

Q601 8-719-941-80 TRANSISTOR GP1S53

****

* 1-640-370-11 LED BOARD
****

< CONNECTOR >

CNP604 * 1-564-495-11 PIN, CONNECTOR 2P

< DIODE >

D601 8-719-107-82 DIODE SE303AY
D602 8-719-107-82 DIODE SE303AY

MC-Service

Ref. No.	Part No.	Description	Remark
	* A-4617-922-A	MAIN BOARD, COMPLETE (C90ES)	
	* A-4617-926-A	MAIN BOARD, COMPLETE (910:AEP, AUS)	
	* A-4617-927-A	MAIN BOARD, COMPLETE (910:US, Canadian)	
	* A-4617-928-A	MAIN BOARD, COMPLETE (910:E)	
		**********	
	* A-4617-923-A	DISPLAY BOARD, COMPLETE (C90ES)	
	* A-4617-929-A	DISPLAY BOARD, COMPLETE (910)	
		**********	
	* 1-640-358-11	POWER SW BOARD	
		**********	
	* 1-640-359-11	RM BOARD	
		********	
	* 1-640-360-11	MOTOR VOL BOARD	
		**********	
	* 1-640-361-11	H.P J BOARD	
		**********	
	* 1-640-362-11	SIRCS BOARD (C90ES)	
		**********	
	* 1-640-363-11	CONNECTOR BOARD (C90ES)	
		**********	
	* 3-322-818-01	HOLDER, CONNECTOR (C90ES)	
	* 4-922-980-01	HOLDER (LED)	
(Q401)	* 4-941-237-01	HEAT SINK	
(Q402)	4-902-345-01	HEAT SINK	
(FLH701)	*4-946-721-01	HOLDER (FL/L)	
(FLH702)	*4-946-209-01	HOLDER (FL)	
(Q602)	4-946-219-01	HOLDER, LED	
	7-682-547-09	SCREW +B 3X6	

< CAPACITOR >

C101	1-164-159-11	CERAMIC	0.1uF		50V
C102	1-162-289-31	CERAMIC	390PF	10%	50V
C103	1-162-285-31	CERAMIC	180PF	10%	50V
C104	1-162-285-31	CERAMIC	180PF	10%	50V
C105	1-130-479-00	MYLAR	0.0047uF	5%	50V
C106	1-130-472-00	MYLAR	0.0012uF	5%	50V
C107	1-124-910-11	ELECT	47uF	20%	50V
C121	1-126-163-11	ELECT	4.7uF	20%	50V
C122	1-162-207-31	CERAMIC	22PF	5%	50V
C131	1-130-473-00	MYLAR	0.0015uF	5%	50V
C151	1-162-294-31	CERAMIC	0.001uF	10%	50V
C201	1-164-159-11	CERAMIC	0.1uF		50V
C202	1-162-289-31	CERAMIC	390PF	10%	50V
C203	1-162-285-31	CERAMIC	180PF	10%	50V
C204	1-162-285-31	CERAMIC	180PF	10%	50V
C205	1-130-479-00	MYLAR	0.0047uF	5%	50V
C206	1-130-472-00	MYLAR	0.0012uF	5%	50V
C207	1-124-910-11	ELECT	47uF	20%	50V
C221	1-126-163-11	ELECT	4.7uF	20%	50V
C222	1-162-207-31	CERAMIC	22PF	5%	50V

MAIN | DISPLAY | POWER SW | RM | MOTOR VOL | H.P J | SIRCS | CONNECTOR

The components identified by mark ⚠ or dotted line with mark ⚠ are critical for safety.
Replace only with part number specified.

Les composants identifiés par une marque ⚠ sont critiques pour la sécurité.
Ne les remplacer que par une pièce portant le numéro spécifié.

Ref. No.	Part No.	Description			Remark
C231	1-130-473-00	MYLAR	0.0015uF	5%	50V
C251	1-162-294-31	CERAMIC	0.001uF	10%	50V
C301	1-164-159-11	CERAMIC	0.1uF		50V
C302	1-164-159-11	CERAMIC	0.1uF		50V
C303	1-162-208-31	CERAMIC	24PF	5%	50V
C305	1-124-994-11	ELECT	100uF	20%	10V
C306	1-164-159-11	CERAMIC	0.1uF		50V
C307	1-164-159-11	CERAMIC	0.1uF		50V
C308	1-162-196-31	CERAMIC	5.6PF	10%	50V
C309	1-162-196-31	CERAMIC	5.6PF	10%	50V
C310	1-164-159-11	CERAMIC	0.1uF		50V
C311	1-124-994-11	ELECT	100uF	20%	10V
C312	1-164-159-11	CERAMIC	0.1uF		50V
C313	1-126-161-11	ELECT	2.2uF	20%	50V
C314	1-126-161-11	ELECT	2.2uF	20%	50V
C351	1-162-306-11	CERAMIC	0.01uF	20%	16V
C352	1-162-306-11	CERAMIC	0.01uF	20%	16V
C401	1-126-017-11	ELECT	6800uF	20%	16V
C402	1-126-017-11	ELECT	6800uF	20%	16V
C403	1-126-059-11	ELECT	10uF	20%	50V
C404	1-126-163-11	ELECT	4.7uF	20%	50V
C405	1-124-997-11	ELECT	470uF	20%	10V
C406	1-124-997-11	ELECT	470uF	20%	10V
C407	1-162-306-11	CERAMIC	0.01uF	20%	16V
C411	1-124-572-11	ELECT	100uF	20%	63V
C412	1-126-059-11	ELECT	10uF	20%	50V
C413	1-126-059-11	ELECT	10uF	20%	50V
C421	1-124-471-00	ELECT	1000uF	20%	6.3V
C431	1-126-059-11	ELECT	10uF	20%	50V
C432	1-126-101-11	ELECT	100uF	20%	16V
C433	1-126-161-11	ELECT	2.2uF	20%	50V
C501	1-124-994-11	ELECT	100uF	20%	10V
C502	1-164-159-11	CERAMIC	0.1uF		50V
C503	1-164-159-11	CERAMIC	0.1uF		50V
C504	1-162-306-11	CERAMIC	0.01uF	20%	16V
C505	1-125-486-11	DUBLE LAYERS	0.22F		5.5V
C511	1-126-025-11	ELECT	330uF	20%	16V
C512	1-164-159-11	CERAMIC	0.1uF		50V
C551	1-164-159-11	CERAMIC	0.1uF		50V
C552	1-164-159-11	CERAMIC	0.1uF		50V
C553	1-164-159-11	CERAMIC	0.1uF		50V
C554	1-162-306-11	CERAMIC	0.01uF	20%	16V
C556	1-126-300-11	ELECT	0.47uF	20%	50V
C557	1-161-374-11	CERAMIC	0.0015uF	20%	50V
C558	1-136-161-00	FILM	0.047uF	5%	50V
C561	1-164-159-11	CERAMIC	0.1uF		50V
C571	1-164-159-11	CERAMIC	0.1uF		50V
C701	1-164-159-11	CERAMIC	0.1uF		50V
C702	1-164-159-11	CERAMIC	0.1uF		50V
C703	1-164-159-11	CERAMIC	0.1uF		50V
C801	1-162-306-11	CERAMIC	0.01uF	20%	16V (C90ES)
C802	1-164-159-11	CERAMIC	0.1uF		50V (C90ES)

< CONNECTOR >

CN301	*	1-568-836-11	SOCKET, CONNECTOR 17P
CN302	*	1-566-859-11	SOCKET, CONNECTOR 15P (SELIAL CHAIN CONTROL) (C90ES)
CN351		1-568-860-11	SOCKET, CONNECTOR 17P
CN352	*	1-568-544-11	PIN, CONNECTOR (PC BOARD) 3P
CN353		1-568-545-11	SOCKET, CONNECTOR (PC BOARD) 3P
CN401	* ⚠	1-580-230-11	PIN, CONNECTOR (PC BOARD) 3P
CN501	*	1-568-834-11	SOCKET, CONNECTOR 15P
CN551		1-568-802-11	SOCKET, CONNECTOR 19P
CN552	*	1-568-834-11	SOCKET, CONNECTOR 15P
CN571	*	1-568-826-11	SOCKET, CONNECTOR 7P (C90ES)
CN572	*	1-568-824-11	SOCKET, CONNECTOR 5P (C90ES)
CN701	*	1-569-306-11	SOCKET, CONNECTOR 15P
CN702	*	1-565-347-11	SOCKET, CONNECTOR (PC BOARD) 8P
CN703	*	1-568-850-11	SOCKET, CONNECTOR 7P (C90ES)
CN751	*	1-565-322-11	PIN, CONNECTOR (PC BOARD) 8P
CN801	*	1-568-824-11	SOCKET, CONNECTOR 5P (C90ES)
CN802	*	1-560-039-21	PIN, CONNECTOR (CONTROL S IN) (C90ES)
CN803	*	1-560-039-21	PIN, CONNECTOR (CONTROL S OUT) (C90ES)

< DIODE >

D301	8-719-210-21	DIODE 11EQS04
D302	8-719-912-20	DIODE 1SS120
D303	8-719-912-20	DIODE 1SS120 (C90ES)
D351	8-719-970-49	DIODE BR4361F
D401	8-719-200-82	DIODE 11ES2
D402	8-719-200-82	DIODE 11ES2
D403	8-719-200-82	DIODE 11ES2
D404	8-719-200-82	DIODE 11ES2
D411	8-719-200-82	DIODE 11ES2
D412	8-719-933-47	DIODE SLR-54GG4-L
D421	8-719-000-54	DIODE UZL-6L3
D422	8-719-912-20	DIODE 1SS120
D505	8-719-912-20	DIODE 1SS120
D506	8-719-000-54	DIODE UZL-6L3
D507	8-719-000-54	DIODE UZL-6L3
D514	8-719-933-41	DIODE HZS6C3L
D515	8-719-001-15	DIODE UZL-9M2
D701	8-719-912-20	DIODE 1SS120
D702	8-719-912-20	DIODE 1SS120
D703	8-719-912-20	DIODE 1SS120
D704	8-719-912-20	DIODE 1SS120
D705	8-719-912-20	DIODE 1SS120
D706	8-719-912-20	DIODE 1SS120

MC-Service

MAIN DISPLAY POWER SW RM MOTOR VOL H.P J SIRCS CONNECTOR

Ref. No.	Part No.	Description	Remark
D707	8-719-912-20	DIODE 1SS120	
D711	8-719-912-20	DIODE 1SS120 (C90ES)	
D712	8-719-912-20	DIODE 1SS120 (C90ES)	
D713	8-719-912-20	DIODE 1SS120 (C90ES)	
D714	8-719-912-20	DIODE 1SS120 (C90ES)	
D715	8-719-912-20	DIODE 1SS120 (C90ES)	
D716	8-719-912-20	DIODE 1SS120 (C90ES)	
D721	8-719-313-49	DIODE SEL3510C-TH12	
D722	8-719-313-72	DIODE SEL3810A-TH12	
D801	8-719-912-20	DIODE 1SS120 (C90ES)	
D802	8-719-912-20	DIODE 1SS120 (C90ES)	
D803	8-719-933-33	DIODE UZL-6L1 (C90ES)	
		< FLUORESCENT >	
FLT701	1-519-662-11	INDICATOR TUBE, FLUORESCENT	
		< IC >	
IC301	8-752-342-65	IC CXD2560M	
IC302	8-752-343-01	IC CXD2561M (C910)	
IC302	8-752-344-10	IC CXD2561M-1 (C90ES)	
IC303	8-759-990-82	IC TL082CP	
IC304	8-759-900-72	IC NE5532P	
IC320	8-759-981-85	IC RC4556D	
IC401	8-759-630-21	IC M5290P-16	
IC411	8-759-605-43	IC M5231TL	
IC431	8-759-945-58	IC RC4558P	
IC501	8-759-153-76	IC uPD75512GF-085	
IC502	8-759-822-78	IC LC3564PML-1015	
IC503	8-759-240-69	IC TC4069UBP	
IC504	8-759-802-32	IC LB1649	
IC505	8-759-802-32	IC LB1649	
IC551	8-752-337-26	IC CXD2500AQ	
IC552	8-759-977-71	IC GP1F31T	
IC701	8-759-513-86	IC MSC62408-025GS-V1K	
IC751	8-741-100-48	IC SBX1610-59	
		< JACK >	
J301	* 1-569-443-11	JACK, PIN 4P (LINE OUT FIXED/VARIABLE)	(C910)
J301	1-569-443-21	JACK, PIN 4P (LINE OUT FIXED/VARIABLE)	(C90ES)
J351	1-568-519-21	JACK, LARGE TYPE (PHONES) (C910)	
J351	1-568-519-41	JACK, LARGE TYPE (PHONES) (C90ES)	
		< COIL >	
L301	1-408-403-00	INDUCTOR 3.3uH	

Ref. No.	Part No.	Description	Remark
		< LINK >	
PS401	⚠ 1-532-637-00	LINK, IC ICP-F25 (1.0A) (C910:AEP, E, AUS)	
PS402	⚠ 1-532-637-00	LINK, IC ICP-F25 (1.0A) (C910:AEP, E, AUS)	
		< TRANSISTOR >	
Q101	8-729-141-30	TRANSISTOR 2SC3623A-LK	
Q102	8-729-141-30	TRANSISTOR 2SC3623A-LK	
Q103	8-729-231-55	TRANSISTOR 2SC2878-AB	
Q104	8-729-900-65	TRANSISTOR DTA144ES	
Q201	8-729-141-30	TRANSISTOR 2SC3623A-LK	
Q202	8-729-141-30	TRANSISTOR 2SC3623A-LK	
Q203	8-729-231-55	TRANSISTOR 2SC2878-AB	
Q204	8-729-900-65	TRANSISTOR DTA144ES	
Q301	8-729-900-65	TRANSISTOR DTA144ES	
Q302	8-729-900-89	TRANSISTOR DTC144ES	
Q303	8-729-900-61	TRANSISTOR DTA114ES (C90ES)	
Q401	8-729-111-67	TRANSISTOR 2SB1274-RS	
Q402	8-729-820-14	TRANSISTOR 2SD1913-RS	
Q411	8-729-900-65	TRANSISTOR DTA144ES	
Q412	8-729-900-89	TRANSISTOR DTC144ES	
Q413	8-729-900-89	TRANSISTOR DTC144ES	
Q414	8-729-900-89	TRANSISTOR DTC144ES	
Q431	8-729-821-73	TRANSISTOR 2SB1274SA-RS	
Q501	8-729-900-65	TRANSISTOR DTA144ES	
Q502	8-729-900-65	TRANSISTOR DTA144ES	
Q503	8-729-900-65	TRANSISTOR DTA144ES	
Q504	8-729-900-65	TRANSISTOR DTA144ES	
Q505	8-729-900-65	TRANSISTOR DTA144ES	
Q506	8-729-900-65	TRANSISTOR DTA144ES	
Q701	8-729-119-78	TRANSISTOR 2SC2785-HFE	
Q702	8-729-119-78	TRANSISTOR 2SC2785-HFE	
Q703	8-729-119-78	TRANSISTOR 2SC2785-HFE (C90ES)	
Q801	8-729-900-61	TRANSISTOR DTA114ES (C90ES)	
Q802	8-729-119-76	TRANSISTOR 2SA1175-HFE (C90ES)	
Q803	8-729-900-61	TRANSISTOR DTA114ES (C90ES)	
		< RESISTOR >	
R101	1-249-428-11	CARBON 8.2K 5% 1/4W	
R102	1-249-428-11	CARBON 8.2K 5% 1/4W	
R103	1-249-428-11	CARBON 8.2K 5% 1/4W	
R104	1-249-428-11	CARBON 8.2K 5% 1/4W	
R105	1-249-423-11	CARBON 3.3K 5% 1/4W	
R106	1-249-423-11	CARBON 3.3K 5% 1/4W	
R107	1-247-856-00	CARBON 11K 5% 1/4W	
R108	1-247-856-00	CARBON 11K 5% 1/4W	
R109	1-249-419-11	CARBON 1.5K 5% 1/4W	
R110	1-249-419-11	CARBON 1.5K 5% 1/4W	

The components identified by mark ⚠ or dotted line with mark ⚠ are critical for safety.
Replace only with part number specified.

Les composants identifiés par une marque ⚠ sont critiques pour la sécurité.
Ne les remplacer que par une pièce portant le numéro spécifié.

MAIN | DISPLAY | POWER SW | RM | MOTOR VOL | H.P J | SIRCS | CONNECTOR

Ref. No.	Part No.	Description				Remark
R111	1-247-887-00	CARBON	220K	5%	1/4W	
R112	1-249-409-11	CARBON	220	5%	1/4W	
R113	1-249-409-11	CARBON	220	5%	1/4W	
R114	1-249-393-11	CARBON	10	5%	1/4W	
R115	1-249-425-11	CARBON	4.7K	5%	1/4W	
R116	1-249-425-11	CARBON	4.7K	5%	1/4W	
R117	1-249-425-11	CARBON	4.7K	5%	1/4W	
R118	1-249-441-11	CARBON	100K	5%	1/4W	
R121	1-249-437-11	CARBON	47K	5%	1/4W	
R122	1-249-433-11	CARBON	22K	5%	1/4W	
R123	1-249-434-11	CARBON	27K	5%	1/4W	
R124	1-247-881-00	CARBON	120K	5%	1/4W	
R125	1-249-401-11	CARBON	47	5%	1/4W	
R131	1-249-414-11	CARBON	560	5%	1/4W	
R132	1-249-414-11	CARBON	560	5%	1/4W	
R201	1-249-428-11	CARBON	8.2K	5%	1/4W	
R202	1-249-428-11	CARBON	8.2K	5%	1/4W	
R203	1-249-428-11	CARBON	8.2K	5%	1/4W	
R204	1-249-428-11	CARBON	8.2K	5%	1/4W	
R205	1-249-423-11	CARBON	3.3K	5%	1/4W	
R206	1-249-423-11	CARBON	3.3K	5%	1/4W	
R207	1-247-856-00	CARBON	11K	5%	1/4W	
R208	1-247-856-00	CARBON	11K	5%	1/4W	
R209	1-249-419-11	CARBON	1.5K	5%	1/4W	
R210	1-249-419-11	CARBON	1.5K	5%	1/4W	
R211	1-247-887-00	CARBON	220K	5%	1/4W	
R212	1-249-409-11	CARBON	220	5%	1/4W	
R213	1-249-409-11	CARBON	220	5%	1/4W	
R214	1-249-393-11	CARBON	10	5%	1/4W	
R215	1-249-425-11	CARBON	4.7K	5%	1/4W	
R216	1-249-425-11	CARBON	4.7K	5%	1/4W	
R217	1-249-425-11	CARBON	4.7K	5%	1/4W	
R218	1-249-441-11	CARBON	100K	5%	1/4W	
R221	1-249-437-11	CARBON	47K	5%	1/4W	
R222	1-249-433-11	CARBON	22K	5%	1/4W	
R223	1-249-434-11	CARBON	27K	5%	1/4W	
R224	1-247-881-00	CARBON	120K	5%	1/4W	
R225	1-249-401-11	CARBON	47	5%	1/4W	
R231	1-249-414-11	CARBON	560	5%	1/4W	
R232	1-249-414-11	CARBON	560	5%	1/4W	
R301	1-249-417-11	CARBON	1K	5%	1/4W	
R303	1-249-417-11	CARBON	1K	5%	1/4W	
R304	1-249-417-11	CARBON	1K	5%	1/4W	
R305	1-249-417-11	CARBON	1K	5%	1/4W	
R306	1-249-417-11	CARBON	1K	5%	1/4W	
R309	1-247-903-00	CARBON	1M	5%	1/4W	
R310	1-249-417-11	CARBON	1K	5%	1/4W	
R311	1-249-441-11	CARBON	100K	5%	1/4W	
R401	1-249-425-11	CARBON	4.7K	5%	1/4W	

Ref. No.	Part No.	Description				Remark
R402	1-249-425-11	CARBON	4.7K	5%	1/4W	
R403	1-249-423-11	CARBON	3.3K	5%	1/4W	
R411	1-247-874-11	CARBON	62K	5%	1/4W	
R412	1-249-423-11	CARBON	3.3K	5%	1/4W	
R413	1-249-433-11	CARBON	22K	5%	1/4W	
R421	1-249-413-11	CARBON	470	5%	1/4W	
R431	1-249-425-11	CARBON	4.7K	5%	1/4W	
R432	1-249-429-11	CARBON	10K	5%	1/4W	
R433	1-249-413-11	CARBON	470	5%	1/4W	
R434	1-249-425-11	CARBON	4.7K	5%	1/4W	
R435	1-249-410-11	CARBON	270	5%	1/4W	
R436	1-249-429-11	CARBON	10K	5%	1/4W	
R501	1-249-433-11	CARBON	22K	5%	1/4W	
R502	1-249-433-11	CARBON	22K	5%	1/4W	
R503	1-249-411-11	CARBON	330	5%	1/4W	
R504	1-249-417-11	CARBON	1K	5%	1/4W	
R505	1-249-433-11	CARBON	22K	5%	1/4W	
R506	1-249-417-11	CARBON	1K	5%	1/4W	
R507	1-249-399-11	CARBON	33	5%	1/4W	
R508	1-249-433-11	CARBON	22K	5%	1/4W	
R509	1-249-433-11	CARBON	22K	5%	1/4W	
R510	1-249-433-11	CARBON	22K	5%	1/4W	
R511	1-249-433-11	CARBON	22K	5%	1/4W	
R512	1-249-437-11	CARBON	47K	5%	1/4W	
R513	1-247-891-00	CARBON	330K	5%	1/4W	
R514	1-249-437-11	CARBON	47K	5%	1/4W	
R515	1-247-891-00	CARBON	330K	5%	1/4W	
R516	1-249-437-11	CARBON	47K	5%	1/4W	
R517	1-247-891-00	CARBON	330K	5%	1/4W	
R518	1-249-433-11	CARBON	22K	5%	1/4W	
R520	1-249-433-11	CARBON	22K	5%	1/4W	
R521	1-249-433-11	CARBON	22K	5%	1/4W	
R522	1-249-429-11	CARBON	10K	5%	1/4W	
R523	1-249-433-11	CARBON	22K	5%	1/4W	
R524	1-249-433-11	CARBON	22K	5%	1/4W	
R551	1-249-411-11	CARBON	330	5%	1/4W	
R552	1-249-429-11	CARBON	10K	5%	1/4W	
R553	1-249-441-11	CARBON	100K	5%	1/4W	
R554	1-249-429-11	CARBON	10K	5%	1/4W	
R555	1-249-423-11	CARBON	3.3K	5%	1/4W	
R556	1-249-423-11	CARBON	3.3K	5%	1/4W	
R557	1-249-417-11	CARBON	1K	5%	1/4W	
R558	1-249-429-11	CARBON	10K	5%	1/4W	
R559	1-249-429-11	CARBON	10K	5%	1/4W	
R560	1-249-429-11	CARBON	10K	5%	1/4W	
R561	1-249-417-11	CARBON	1K	5%	1/4W	
R562	1-249-417-11	CARBON	1K	5%	1/4W	
R563	1-249-417-11	CARBON	1K	5%	1/4W	
R571	1-249-393-11	CARBON	10	5%	1/4W	(C90ES)

MAIN | DISPLAY | POWER SW | RM | MOTOR VOL | H.P J | SIRCS | CONNECTOR

Ref. No.	Part No.	Description			Remark
R572	1-249-393-11	CARBON	10	5%	1/4W(C90ES)
R701	1-247-903-00	CARBON	1M	5%	1/4W
R702	1-249-433-11	CARBON	22K	5%	1/4W
R703	1-249-433-11	CARBON	22K	5%	1/4W
R704	1-249-441-11	CARBON	100K	5%	1/4W
R705	1-249-441-11	CARBON	100K	5%	1/4W
R706	1-249-406-11	CARBON	120	5%	1/4W
R707	1-249-410-11	CARBON	270	5%	1/4W
R708	1-249-429-11	CARBON	10K	5%	1/4W
R709	1-249-429-11	CARBON	10K	5%	1/4W
R710	1-249-429-11	CARBON	10K	5%	1/4W
R711	1-249-429-11	CARBON	10K	5%	1/4W
R712	1-249-429-11	CARBON	10K	5%	1/4W
R713	1-249-409-11	CARBON	220	5%	1/4W(C90ES)
R714	1-249-409-11	CARBON	220	5%	1/4W(C90ES)
R715	1-249-409-11	CARBON	220	5%	1/4W(C90ES)
R716	1-249-429-11	CARBON	10K	5%	1/4W(C90ES)
R717	1-249-429-11	CARBON	10K	5%	1/4W(C90ES)
R718	1-249-429-11	CARBON	10K	5%	1/4W(C90ES)
R801	1-249-429-11	CARBON	10K	5%	1/4W(C90ES)
R802	1-249-429-11	CARBON	10K	5%	1/4W(C90ES)
R803	1-249-393-11	CARBON	10	5%	1/4W(C90ES)
		< VARIABLE RESISTOR >			
RV351	1-241-576-11	RES, VAR, CARBON 10K/10K/10K (PHONE LEVEL/LINE OUT LEVEL)			
		< RELAY >			
RY101	1-515-803-11	RELAY (C90ES)			
RY201	1-515-803-11	RELAY (C90ES)			
		< SWITCH >			
S401	⚠ 1-571-722-11	SWITCH, VOLTAGE SELECTION (VOLTAGE SELECTOR) (C910:E)			
S501	1-570-815-21	SWITCH, SLIDE (MODE) (C90ES)			
S701	1-554-303-21	SWITCH, TACTILE (DISC 1)			
S702	1-554-303-21	SWITCH, TACTILE (DISC 2)			
S703	1-554-303-21	SWITCH, TACTILE (DISC 3)			
S704	1-554-303-21	SWITCH, TACTILE (DISC 4)			
S705	1-554-303-21	SWITCH, TACTILE (DISC 5)			
S706	1-554-303-21	SWITCH, TACTILE (DISC 6)			
S707	1-554-303-21	SWITCH, TACTILE (DISC 7)			
S708	1-554-303-21	SWITCH, TACTILE (DISC 8)			
S709	1-554-303-21	SWITCH, TACTILE (DISC 9)			
S710	1-554-303-21	SWITCH, TACTILE (DISC 10)			
S711	1-554-303-21	SWITCH, TACTILE (1)			
S712	1-554-303-21	SWITCH, TACTILE (2)			
S713	1-554-303-21	SWITCH, TACTILE (3)			
S714	1-554-303-21	SWITCH, TACTILE (4)			
S715	1-554-303-21	SWITCH, TACTILE (5)			
S716	1-554-303-21	SWITCH, TACTILE (6)			
S717	1-554-303-21	SWITCH, TACTILE (7)			
S718	1-554-303-21	SWITCH, TACTILE (8)			
S719	1-554-303-21	SWITCH, TACTILE (9)			
S720	1-554-303-21	SWITCH, TACTILE (10)			
S721	1-554-303-21	SWITCH, TACTILE (DISK SKIP)			
S722	1-554-303-21	SWITCH, TACTILE (>10)			
S723	1-554-303-21	SWITCH, TACTILE (CONTINUE)			
S724	1-554-303-21	SWITCH, TACTILE (SHUFFLE)			
S725	1-554-303-21	SWITCH, TACTILE (PROGRAM)			
S726	1-554-303-21	SWITCH, TACTILE (BANK)			
S727	1-554-303-21	SWITCH, TACTILE (EJECT)			
S728	1-554-303-21	SWITCH, TACTILE (PLAY)			
S729	1-554-303-21	SWITCH, TACTILE (PAUSE)			
S730	1-554-303-21	SWITCH, TACTILE (STOP)			
S731	1-554-303-21	SWITCH, TACTILE (SEARCH REC)			
S732	1-554-303-21	SWITCH, TACTILE (SEARCH FWD)			
S733	1-554-303-21	SWITCH, TACTILE (AMS REW)			
S734	1-554-303-21	SWITCH, TACTILE (AMS FF)			
S735	1-554-303-21	SWITCH, TACTILE (P. SEARCH)			
S736	1-554-303-21	SWITCH, TACTILE (FADER)			
S737	1-554-303-21	SWITCH, TACTILE (TIME/MEMO)			
S738	1-554-303-21	SWITCH, TACTILE (REPEAT)			
S739	1-554-303-21	SWITCH, TACTILE (CHECK)			
S740	1-554-303-21	SWITCH, TACTILE (CLEAR)			
S741	1-554-303-21	SWITCH, TACTILE (FILE)			
S742	1-554-303-21	SWITCH, TACTILE (ERASE)			
S743	1-554-303-21	SWITCH, TACTILE (MUSIC SCAN)			
S744	1-554-303-21	SWITCH, TACTILE (EDIT)			
S745	1-554-303-21	SWITCH, TACTILE (LEVEL FILE)			
S751	1-572-714-11	SWITCH, PUSH (POWER)			
S752	1-570-974-11	SWITCH, SLIDE (TIMER)			
		< TRANSFORMER >			
T901	⚠ 1-450-614-11	TRANSFORMER, POWER (910:US, Canadian/C90ES)			
T901	⚠ 1-450-615-11	TRANSFORMER, POWER (910:AEP, AUS)			
T901	⚠ 1-450-616-11	TRANSFORMER, POWER (910:E)			
		< CRYSTAL >			
X301	1-567-965-11	VIBRATOR, CRYSTAL (22.5MHz)			
X501	1-577-101-11	VIBRATOR, CERAMIC (4.19MHz)			
X701	1-577-101-11	VIBRATOR, CERAMIC (4.19MHz)			

The components identified by mark ⚠ or dotted line with mark ⚠ are critical for safety.
Replace only with part number specified.

Les composants identifiés par une marque ⚠ sont critiques pour la sécurité.
Ne les remplacer que par une pièce portant le numéro spécifié.

M1 MOTOR | M2 MOTOR | M3 MOTOR | RELAY | S0 SWITCH | S1 SWITCH | S2 SWITCH | S3 SWITCH

Ref. No.	Part No.	Description	Remark
*	1-640-364-11	M1 MOTOR BOARD **********	
		< CAPACITOR >	
C601	1-136-165-00	FILM 0.1uF 5% 50V	
		< MOTOR >	
M601	A-4608-356-A	MOTOR ASSY, M1 (PACK EJECT/LEVER OUT)	
**********			
*	1-640-373-11	M2 MOTOR BOARD **********	
		< CAPACITOR >	
C602	1-136-165-00	FILM 0.1uF 5% 50V	
		< CONNECTOR >	
CN603 *	1-568-848-11	SOCKET, CONNECTOR 5P	
CNP602 *	1-564-495-11	PIN, CONNECTOR 2P	
		< MOTOR >	
M602	A-4608-360-A	MOTOR ASSY, M2 (SAVE/LOAD)	
**********			
*	1-640-365-11	M3 MOTOR BOARD **********	
		< CAPACITOR >	
C603	1-136-165-00	FILM 0.1uF 5% 50V	
		< MOTOR >	
M603	A-4608-358-A	MOTOR ASSY, M3 (ELEVATOR UP/DOWN)	
**********			
*	1-640-369-11	RELAY BOARD **********	
		< CONNECTOR >	
CN610 *	1-568-858-11	SOCKET, CONNECTOR 15P	
CN611 *	1-568-848-11	SOCKET, CONNECTOR 5P	
CNP601 *	1-564-495-11	PIN, CONNECTOR 2P	
CNP605 *	1-564-497-11	PIN, CONNECTOR 4P	
CNP610 *	1-564-496-11	PIN, CONNECTOR 3P	
		< CIRCUIT BLOCK >	
CP601	1-239-141-11	COMPOSITION CIRCUIT BLOCK	
		< TRANSISTOR >	
Q602	8-729-904-10	TRANSISTOR PT360FS	
Q603	8-729-904-10	TRANSISTOR PT360FS	
**********			
*	1-640-372-11	S0 SWITCH BOARD **********	
		< CONNECTOR >	
CNP606 *	1-564-495-11	PIN, CONNECTOR 2P	
CNP607 *	1-564-495-11	PIN, CONNECTOR 2P	
		< SWITCH >	
S601	1-554-205-00	SWITCH, PUSH (EJECT)	
**********			
*	1-640-371-11	S1 SWITCH BOARD **********	
		< SWITCH >	
S602	1-554-205-00	SWITCH, PUSH (RST)	
**********			
*	1-640-368-11	S2 SWITCH BOARD **********	
		< CONNECTOR >	
CNP608 *	1-564-336-71	PIN, CONNECTOR 2P	
		< SWITCH >	
S603	1-554-205-00	SWITCH, PUSH (LOT)	
**********			
*	1-640-366-11	S3 SWITCH BOARD **********	
		< CONNECTOR >	
CNP609 *	1-564-336-81	PIN, CONNECTOR 2P	
		< SWITCH >	
S604	1-554-205-00	SWITCH, PUSH (HOME)	

S4 SWITCH

Ref. No.	Part No.	Description	Remark
	* 1-640-374-11	S4 SWITCH BOARD	
		**********	
		< SWITCH >	
S605	1-570-886-11	SWITCH, MICRO (LOAD IN DET)	

****

MISCELLANEOUS
****

Ref. No.	Part No.	Description	Remark
9	1-575-218-11	WIRE, FLAT TYPE (17 CORE)	
10	1-690-113-11	WIRE, FLAT TYPE (15 CORE)	
53	1-575-664-11	WIRE, FLAT TYPE (15 CORE)	
54	1-535-944-11	JUMPER, FILM (WITH TERMINAL)	
55	1-690-114-11	WIRE, FLAT TYPE (7 CORE) (C90ES)	
59	⚠ 1-574-358-31	CORD, POWER (WITH CONNECTOR) (910:AUS)	
59	⚠ 1-575-651-21	CORD, POWER (910:AEP)	
59	⚠ 1-575-653-21	CORD, POWER (910:E)	
59	⚠ 1-590-926-11	CORD, POWER (910:US, Canadian/C90ES)	
60	⚠ 1-569-007-11	ADAPTER, CONVERSION 2P (910:E)	
63	1-590-031-11	WIRE, FLAT TYPE (5 CORE) (C90ES)	
199	1-690-115-11	WIRE, FLAT TYPE	
251	8-848-144-11	PICK-UP, OPTICAL KSS-240A	
252	1-575-001-11	WIRE, FLAT TYPE (12 CORE)	
M101	X-4917-504-1	MOTOR ASSY (SLED)	
M102	X-4917-523-3	MOTOR ASSY (SPINDLE)	
M601	A-4608-356-A	MOTOR ASSY, M1 (PACK EJECT/LEVER OUT)	
M602	A-4608-360-A	MOTOR ASSY, M2 (SAVE/LOAD)	
M603	A-4608-358-A	MOTOR ASSY, M3 (ELEVATOR UP/DOWN)	

MC-Service

The components identified by mark ⚠ or dotted line with mark ⚠ are critical for safety. Replace only with part number specified.	Les composants identifiés par une marque ⚠ sont critiques pour la sécurité. Ne les remplacer que par une pièce portant le numéro spécifié.

Ref. No.	Part No.	Description	Remark
		ACCESSORY & PACKING MATERIAL	
		**********	
	1-465-731-11	REMOTE COMMANDER (RM-D900) (C90ES) (including $)	
	1-465-732-11	REMOTE COMMANDER (RM-D910) (C910) (including $)	
	1-558-233-11	CORD (WITH CONNECTOR) (SIRCS) 4P (C90ES)	
	1-559-533-11	CORD, CONNECTION	
$	3-707-584-11	COVER, BATTERY	
	3-753-610-11	MANUAL, INSTRUCTION (ENGLISH, FRENCH, SPANISH, PORTUGUESE) (C910:Canadian, AEP, E)	
	3-753-610-21	MANUAL, INSTRUCTION (ENGLISH) (C910:US, AUS)	
	3-753-610-41	MANUAL, INSTRUCTION (GERMAN, DUTCH, SWEDISH, ITALIAN) (C910:AEP)	
	3-753-611-21	MANUAL, INSTRUCTION (ENGLISH, FRENCH) (C90ES)	
	4-847-802-00	SCREW (C90ES)	
*	4-885-838-00	LABEL, CLASS 1 (C910:AEP, E, AUS)	
*	4-946-352-01	INDIVIDUAL CARTON (C910)	
*	4-946-353-01	INDIVIDUAL CARTON (C90ES)	
*	4-946-354-01	CUSHION (UPPER)	
*	4-946-355-01	CUSHION (LOWER)	
	7-685-103-19	SCREW +P 2X5 TYPE2 NON-SLIT	
	7-685-105-19	TAPPING +P 2X8 NON-SLIT	
	A-4675-162-B	MAGAZINE ASSY	
	J-609-001-3A	CORD (WITH CONNECTOR) (C90ES)	

****

HARDWARE LIST

# 1	7-621-773-93	SCREW (PANEL 2.6 TP2)
# 2	7-685-646-79	SCREW +BVTP 3X8 TYPE2 N-S
# 3	7-682-547-04	SCREW +BVTT 3X6 (S)
# 4	7-682-548-09	SCREW +BVTT 3X8 (S)
# 5	7-682-245-09	SCREW +K 3X4
# 6	7-685-103-19	SCREW +P 2X5 TYPE2 N-S
# 7	7-621-775-00	SCREW +B 2.6X3
# 8	7-685-868-01	SCREW +BVTT 2.6X20 (S)
# 9	7-682-548-04	SCREW +BVTT 3X8 (S)
#10	7-621-255-25	SCREW +BVTT 2X4 (S)
#11	7-621-773-87	SCREW +BVTT 2.6X10 (S)
#12	7-621-775-68	SCREW +BVTT 2.6X12 (S)
#13	7-688-002-03	W 2.6, SMALL
#14	7-624-105-04	STOP RING 2.3, TYPE -E
#15	7-627-553-78	SCREW, PRECISION +P 2X10
#16	7-621-772-00	SCREW +B 2X3
#17	7-685-134-19	SCREW +BTP 2.6X8 TYPE2 N-S
#18	7-621-255-15	SCREW +P 2X3
#19	7-682-547-09	SCREW +B 3X6

9-956-548-11

Sony Corporation
Audio Group

English
91F1887-1
Printed in Japan
1991.6
Published by Customer Relations and Service Group