AKAI SERVICE MANUAL

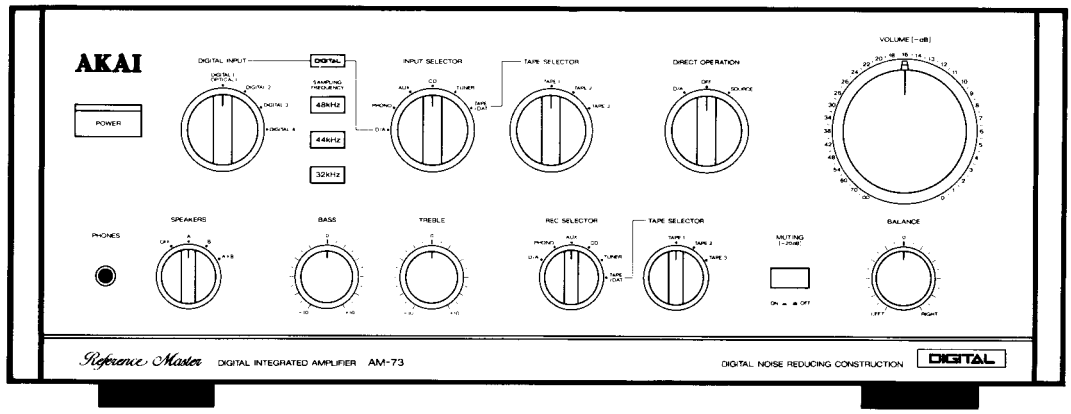

DIGITAL INTEGRATED AMPLIFIER

MODEL AM-73

www.manualscenter.com

SPECIFICATIONS

Power output	150 W + 150 W (DIN, 4 ohms)
	100 W + 100 W (FTC, 8 ohms)
Power band width	10 Hz to 60 kHz/0.1%
Total harmonic distortion	0.008% (1 kHz, 8 ohms)
Phone max. input level	250 mV (MM)
Frequency response	3 Hz to 100 kHz (+0 dB, −3 dB)
Tone control	
TREBLE	±10 dB (10 kHz)
BASS	±10 dB (100 Hz)
Input sensitivity/Impedance	
PHONO (MM)	2.5 mV/47 kohms
TUNER, etc	150 mV/47 kohms
Output level/Impedance	
TAPE REC OUT	150 mV/1 kohms
Damping factor	30 (1 kHz)
Residual noise	0.5 mV
S/N	
PHONO (MM)	85 dB
TUNER, etc	100 dB
Channel separation	60 dB
Audio mute	−20 dB
Required speaker impedance	
A or B	6 to 16 ohms
A and B	12 to 16 ohms
Sampling frequency	32 kHz/44.1 kHz/48 kHz
Digital filter	4 fs, 16 bit
D/A converter	16 bit, 2 DAC
Digital input level/Impedance	
COAXIAL	0.5 Vp-p/75 ohms
OPTICAL	−14 to −23 dBm
Frequency response	5 Hz to 20 kHz (±0.3 dB)
Dynamic range	95 dB
Total harmonic distortion	0.003%
Channel separation	115 dB
Dimensions	461 (W) × 177 (H) × 452 (D) mm
Standard accessories	
operators manual	1
Weight	17.7 kg (38.9 lbs)

* For improvement purposes, specifications and design are subject to change without notice.

★SAFETY INSTRUCTIONS

PRECAUTIONS DURING SERVICING

1. Parts identified by the ⚠ (*) symbol parts are critical for safety. Replace only with parts number specified.
2. In addition to safety, other parts and assemblies are specified for conformance with such regulations as those applying to spurious radiation.
   These must also be replaced only with specified replacements.
   Examples: RF converters, tuner units, antenna selector switches, RF cables, noise blocking capacitors, noise blocking filters, etc.
3. Use specified internal wiring. Note especially:
   1) Wires covered with PVC tubing
   2) Double insulated wires
   3) High voltage leads
4. Use specified insulating materials for hazardous live parts. Note especially:
   1) Insulation Tape
   2) PVC tubing
   3) Spacers (Insulating Barriers)
   4) Insulation sheets for transistors
   5) Plastic screws for fixing microswitch (especially in turntable)
5. When replacing AC primary side components (transformers, power cords, noise blocking capacitors, etc.), wrap ends of wires securely about the terminals before soldering.

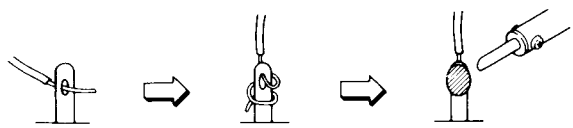

6. Observe that wires do not contact heat producing parts (heatsinks, oxide metal film resistors, fusible resistors, etc.).
7. Check that replaced wires do not contact sharp edged or pointed parts.
8. Also check areas surrounding repaired locations.
9. Use care that foreign objects (screws, solder droplets, etc.) do not remain inside the set.

SAFETY CHECK AFTER SERVICING

Confirm the specified insulation resistance between power cord plug prongs and externally exposed parts of the set is greater than 10 M ohms. but for equipment with external antenna terminals (tuner, receiver, etc.) and is intended for C or A , specified insulation resistance should be headphone jacks line-in-out jacks etc. more than 2.2 M ohms (ground terminals, microphone jacks).

★INFORMATION

SYMBOLS FOR PRIMARY DESTINATION

Alphabet indicates the destination of the units as listed below.

Symbols	Principal Destinations
[A]	USA
[B]	UK
[C]	Canada
[E]	Europe (except UK)
[J]	Japan
[S]	Australia
[V]	W. Germany only
[U]	Universal Area
[Y*]	Custom version

VOLTAGE CONVERSION ([U] Model only)

Before connecting the power cord. SET the VOLTAGE SELECTOR located on the rear panel with a screwdriver so that the correct voltage is indicated.

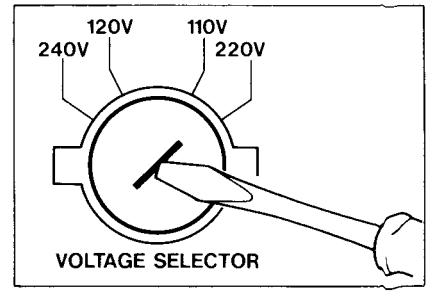

I. CONTROLS

1-1. FRONT PANEL

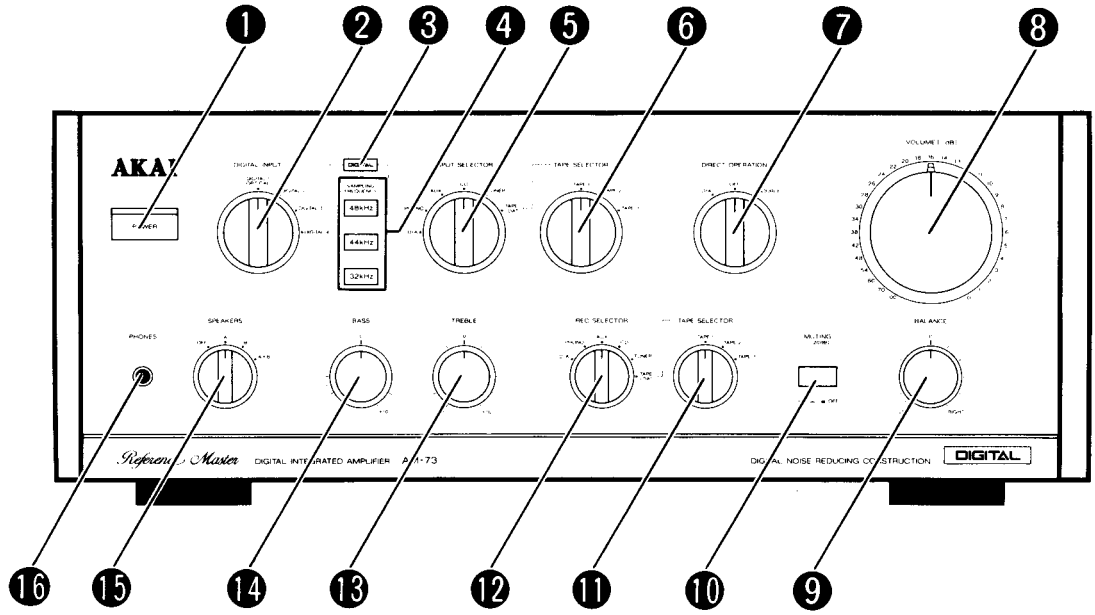

❶ POWER Button and Indicator
To turn the power on and off.
The indicator will flash on and off when the speaker protection circuit is engaged.

❷ DIGITAL INPUT Switch (DIGITAL 1. (OPTICAL), IGITAL DIGITAL 2/3/4)
To select the digital input source.

❸ DIGITAL Indicator
Tells you the INPUT SELECTOR switch or the DIRECT OPERATION switch is set to D/A.

❹ SAMPLING FREQUENCY Indicators (32 kHz/44 kHz/48 kHz)
Tells you the sampling frequency of the digital source being played back.

❺ INPUT SELECTOR Switch
To select the playback source you wish to listen to.

❻ TAPE SELECTOR Switch
To select the cassette deck or DAT deck being used for playback.

❼ DIRECT OPERATION Switch
To select the playback operation mode. If you wish to use the BASS, TREBLE or BALANCE controls, set the switch to OFF.

❽ VOLUME Control (–dB: minus decibel)
To adjust the volume level. The 0 dB (zero decibel) position is the maximum volume output of the amplifier.

❾ BALANCE Control
To adjust the left and right channel balance.
Normally set the control to 0.

❿ MUTING Switch
To reduce the volume instantly during playback without using the VOLUME control.

⓫ TAPE SELECTOR Switch
To select the cassette deck or DAT deck being used for recording.

⓬ REC SELECTOR Switch
To select the playback source for recording.

⓭ TREBLE Tone Control
To adjust the high note (treble) level. When set to 0, the control is ineffective.

⓮ BASS Tone Control
To adjust the low note (bass) level. When set to 0, the control is ineffective.

⓯ SPEAKERS Switch
To select the speaker system.
For headphone listening, set the switch to OFF. When using two pairs of speaker systems at the same time, set the switch to A+B.

⓰ PHONES Jack
For headphone listening.
Connect the headphone plug to the jack.

www.manualscenter.com

1-2. REAR PANEL

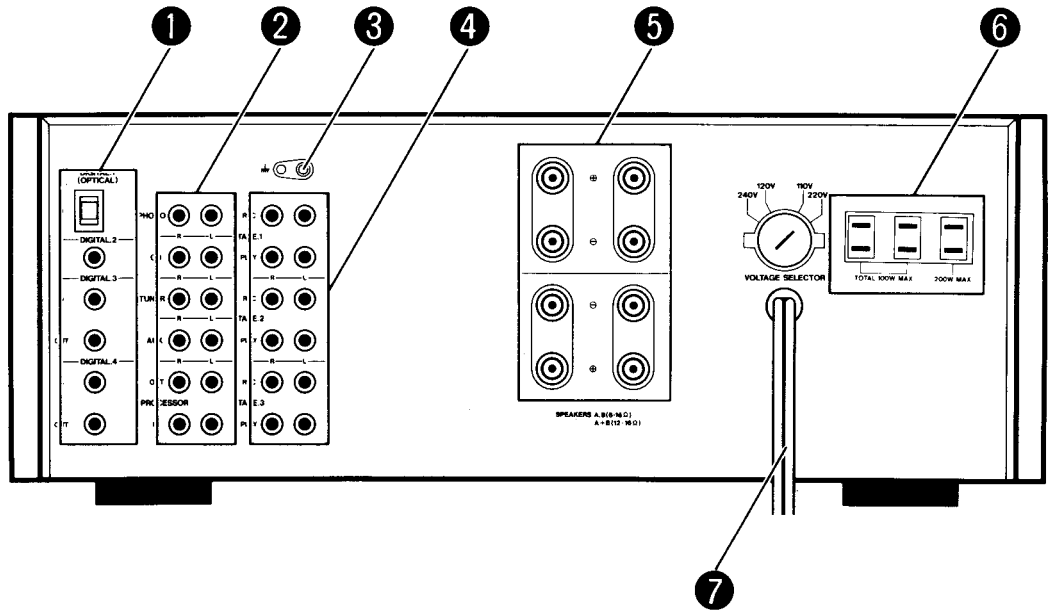

❶ Digital Signal Connection Terminal and Jacks
For connection of components with DIGITAL INPUT or OUTPUT jacks.

DIGITAL.1 (OPTICAL) IN Terminal and terminal cap
Use this terminal when connecting a CD player or DAT deck that has an optical output terminal. (Use an optical fiber cable available in hi-fi stores for connections).

DIGITAL. 2 IN Jack
Use this jack when connecting a CD player or DAT deck that has a digital coaxial output jack. (Use an optical or digital video connection cable available in hi-fi stores for connections).

DIGITAL. 3, 4 IN and OUT Jacks
Use these jacks when connecting a DAT deck that has digital coaxial input and output jacks. (Use an optical or digital video connection cable available in hi-fi stores for connections).
The DIGITAL OUT jack can be used for connection of a DAT deck for digital tape dubbing or a DSP (Digital Sound Processor).

❷ Analog Connection Jacks
These jacks are for conventional signal (analog) connections. The white PIN-jacks are for left channel connections and the red PIN-jacks are for right channel connections.

PHONO Jacks
Connect the output PIN-plug cord of a turntable to these jacks.

CD Jacks
Connect the OUTPUT jacks of a CD player to these jacks with an audio PIN-plug cord.

TUNER Jacks
Connect the OUTPUT jacks of a tuner to these jacks with an audio PIN-plug cord.

AUX Jacks
Connect the OUTPUT jacks of an auxiliary source such as a cassette deck, DAT deck or CD player to these jacks with an audio PIN-plug cord.

PROCESSOR IN and OUT Jacks/Short pins
For connection of a graphic equalizer or surround processor with an audio PIN-plug cord.
Remove the two short pins from these jacks before connecting. Leave these pins in place when a graphic equalizer or surround processor is not connected to these jacks.

❸ ⏚ (Earth) Terminal
If your turntable has an earth wire, connect it to this terminal.

❹ Analog Tape Connecting Jacks
For connection of cassette decks or DAT decks that have analog OUTPUT and INPUT jacks.

TAPE. 1, TAPE. 2 and TAPE. 3 Jacks (REC/PLAY)
Connect the INPUT jacks of a cassette deck or DAT deck to the REC jacks with an audio PIN-plug cord.
Connect the OUTPUT jacks of a cassette deck or DAT deck to the PLAY jacks with an audio PIN-plug cord.

❺ SPEAKERS A, B Terminals
For speaker system connections. The A terminals correspond to the A position of the SPEAKERS switch and the B terminals correspond to the B position. Red terminals are the + (plus) terminals and black terminals are the — (minus) terminals.

❻ AC OUTLETS (Not on all models)
For connection of audio equipment power cords (tuner, CD player, cassette deck, DAT deck etc.).
The maximum connected power consumption is 300 Watts. Do not exceed the maximum power consumption indicated on the rear panel of the amplifier.
The UNSWITCHED outlets supply power when the power cord of the amplifier is connected to a household AC outlet. The power to the SWITCHED outlet is turned on and off by the amplifier's POWER switch.

❼ Power cord and plug
Connect to a household AC outlet. If you wish to use an audio timer, connect the power cord to the timer's AC outlet.

II. DISASSEMBLY

In case of trouble, etc. necessitating dismantling, please dismantle in the order shown in the photographs. Reassemble in reverse order.

2. Removal of BOTTOM PLATE & FRONT PANEL

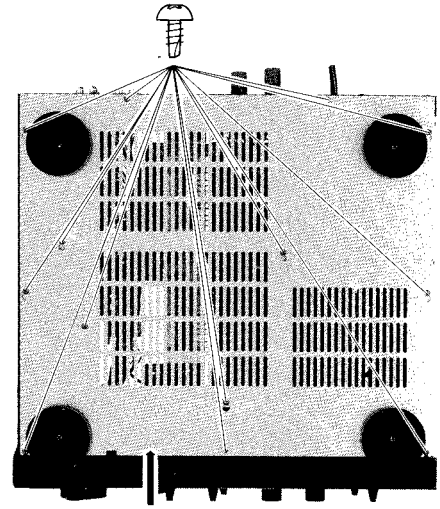

1. Removal of UPPER COVER

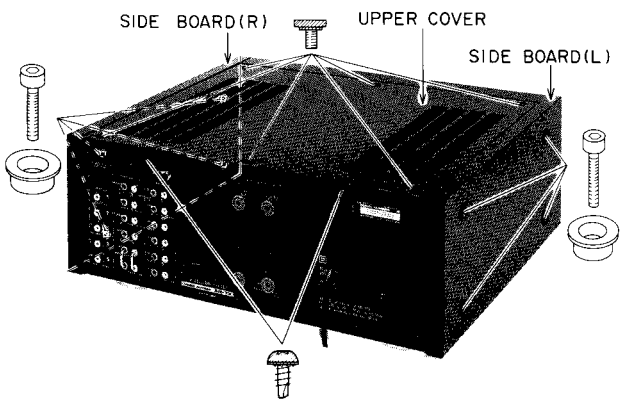

3. CONNECTORS (J1 & J2)

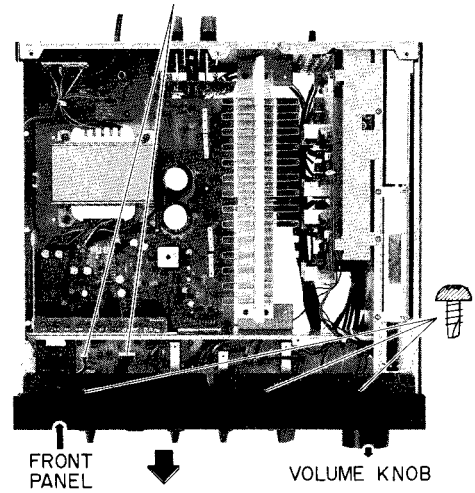

※ Disconnect CONNECTORS (J1 & J2) and remove VOLUME KNOB first, then remove FRONT PANEL next.

www.manualscenter.com

III. PRINCIPAL PARTS LOCATION

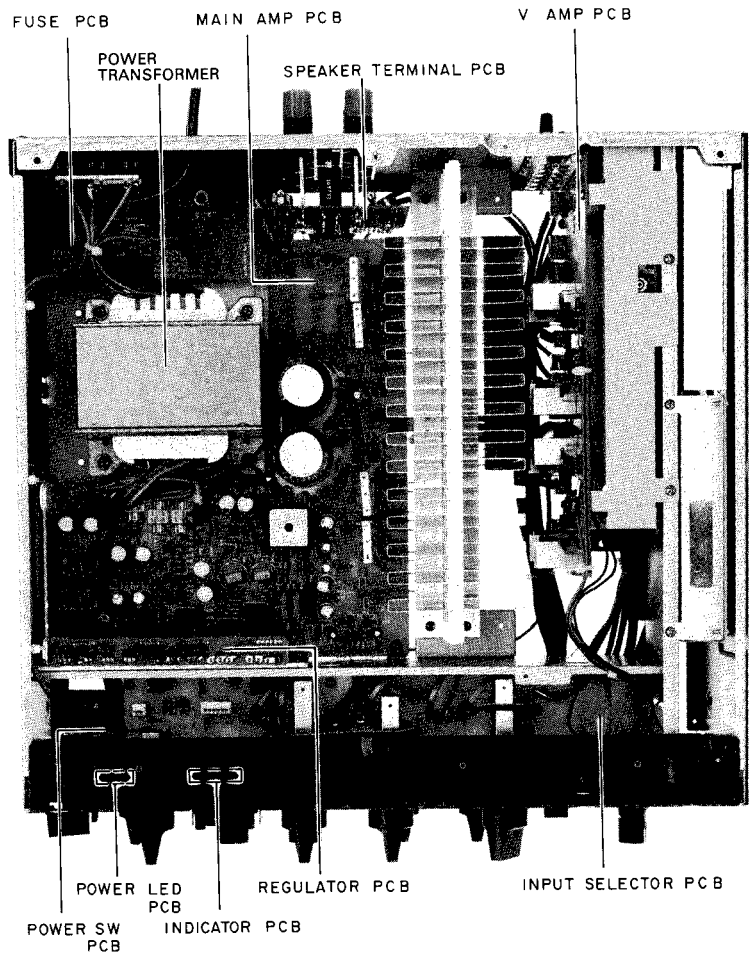

Fig. 3-1 Top View

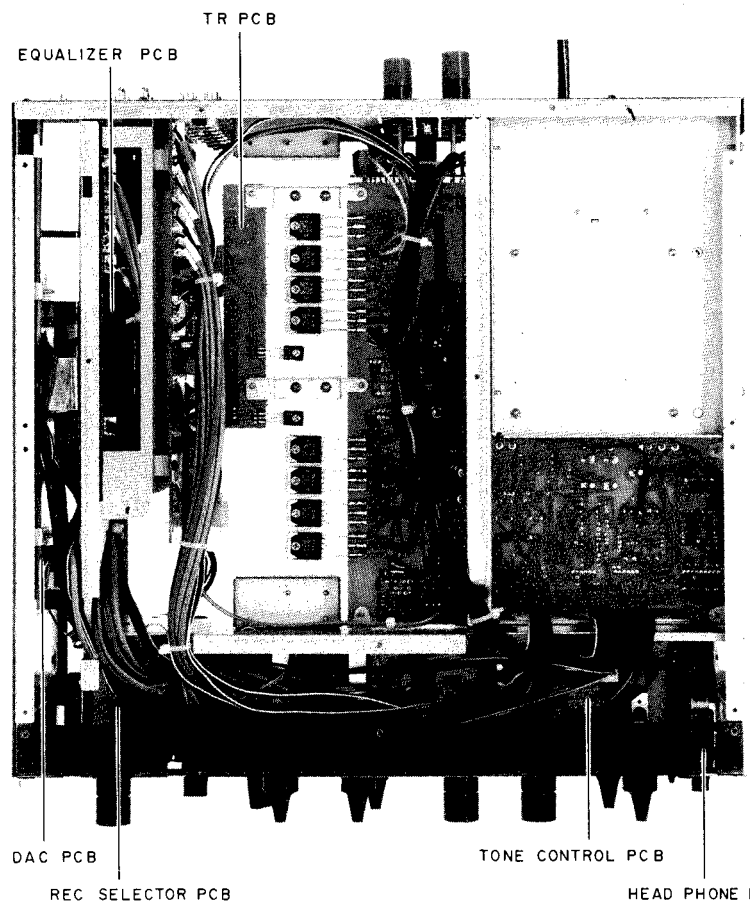

Fig. 3-2 Bottom View

IV. ELECTRICAL ADJUSTMENT

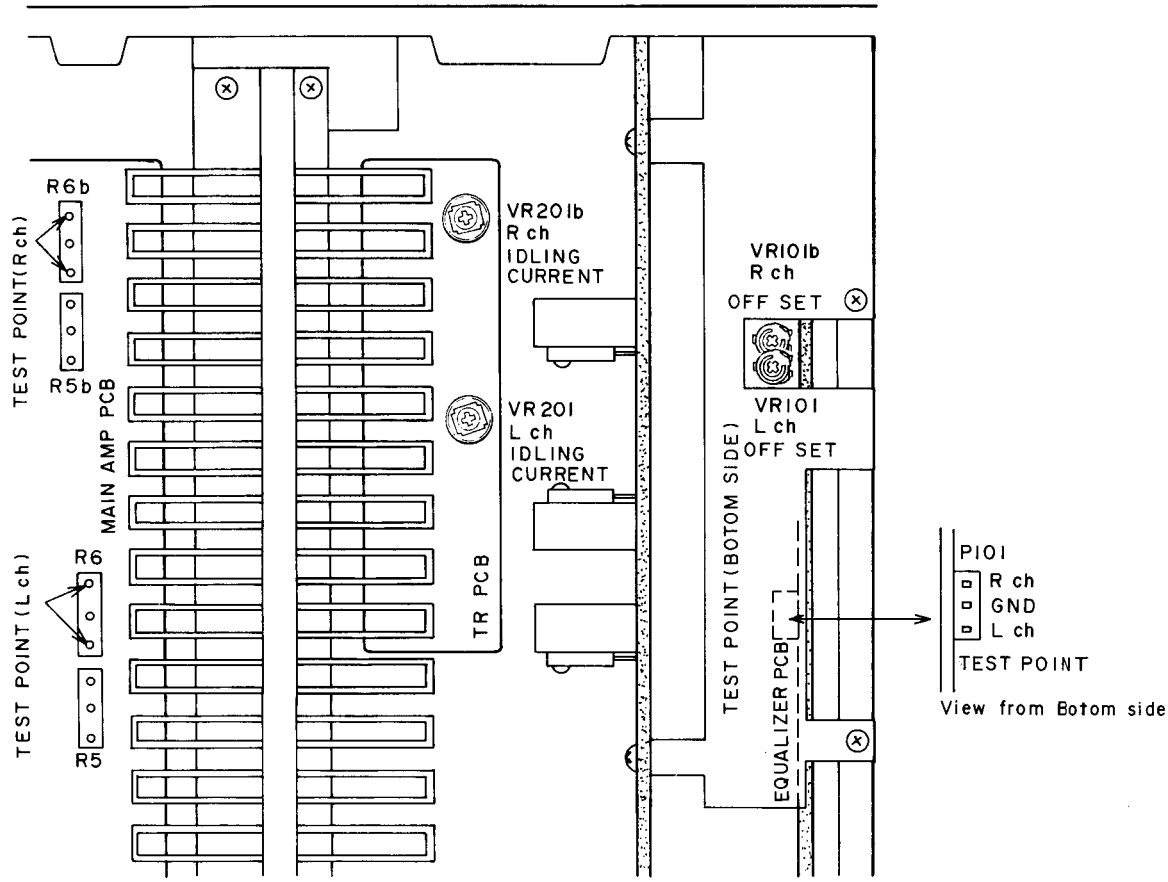

Fig. 4-1 Idling current, OFF-SET Adjustment parts and Test points

4-1. IDLING CURRENT ADJUSTMENT (Refer to Fig. 4-1)

NOTE: This adjustment should be made after 5 minutes passed from turning the power on.

1) Connect the Digital DC Voltmeter between both ends of cement type resistor R5 or R6 (L-CH), R5b or R6b (R-CH) on the MAIN AMP PCB.
2) Adjust VR201 (L-CH), VR201b (R-CH) on the TR PCB, so that the reading on the Digital DC Voltmeter is 30 mV.

4-2. OFF-SET ADJUSTMENT OF PHONO AMPLIFIER (Refer to Fig. 4-1)

NOTE: This adjustment should be made after 5 minutes passed from turning the power on.

1) Connect the Digital DC Voltmeter between Pin ① (L-CH), Pin ③ (R-CH) and Pin ② (GND) on the EQUALIZER PCB.
2) Adjust VR101 (L-CH), VR101b (R-CH) on the EQUALIZER PCB, so that the reading on the Digital DC Voltmeter is 0 V.

www.manualscenter.com

4-3. DISTORTION ADJUSTMENT OF D/A CONVERTOR

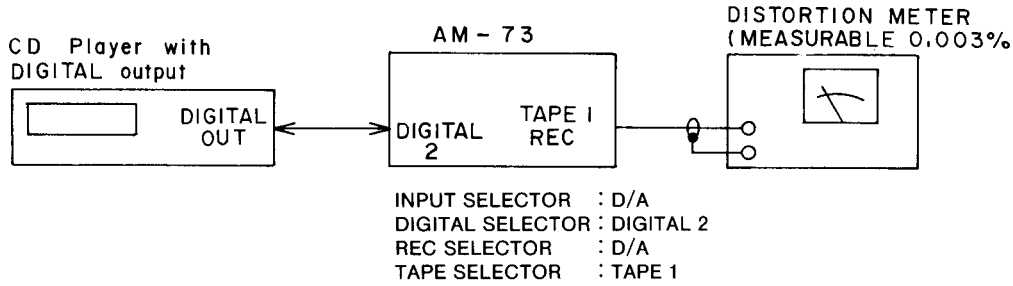

Fig. 4-2 Instrument connection

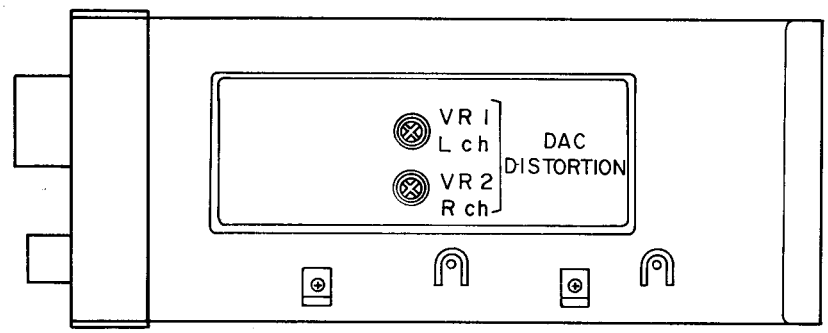

Fig. 4-3 Adjustment part of DAC PCB

1) Connect a CD player which has a digital output terminal to DIGITAL 2 IN, and connect Distortion meter to TAPE 1 REC Terminal.
2) Set the Selector switches on the Front panel as follow.
   INPUT SELECTOR: D/A
   DIGITAL SELECTOR: DIGITAL 2
   REC SELECTOR: D/A
   TAPE SELECTOR: TAPE 1
3) Insert a test disc TYPE III (AT-711881) into CD PLAYER and play it 1 kHz.
4) Adjust VR1 (L-CH), VR1b (R-CH) on the DAC PCB so that the reading on the Distortion meter is at minimum (less than 0.01%).

V. PARTS LIST

ATTENTION

1. **When placing an order for parts, be sure to list Part No., Model No. and the description of each part. Otherwise, the non-delivery of the part or the delivery of a wrong part may result.**
2. **Please make sure that Part No. is correct when ordering. If not, a part different from the one you ordered may be delivered.**
3. **Since the parts shown in Parts List of Preliminary Service Manual may have been the subject of changes, please use this Parts List for all future reference.**

HOW TO USE THIS PARTS LIST

1. This Parts List lists those parts which are considered necessary for repairs. Other common parts, such as resistors and capacitors, are listed in the "Common List for Service Parts" from which these parts should be selected and stocked.
2. The Recommended Spare Parts List shows those parts in the Parts List which are considered particularly important for service.
3. Parts not shown in the Parts List and "Common List for Service Parts" will not in principle be supplied.
4. How to read the Parts List.

a) Mechanism Block

2. HEAD BASE BLOCK

REF. NO.	PART NO.	DESCRIPTION
2-1x	BH-T2023A320A	HEAD BASE BLOCK
2-2	HP-H2206A010A	HEAD R/P PR4-8FU C
2-3	ZS-477876	PAN20×03STL CMT
2-4	ZS-536488	BID20×08STL CMT
2-5	ZG-402895	SP CS ANGLE ADJUST

- SP (Service Parts) Classification
- A small "x" indicates that this part is not shown in the Photo or Illustration.
- This number corresponds with the individual parts index number in that figure.
- This number corresponds with the Figure Number.

b) PC Board

6. MAIN PC BOARD

REF. NO.	PART NO.	DESCRIPTION
6-IC1	EI-324536	IC HD14049BP
6-IC2	EI-336801	IC MB8841-564M
6-C1A	EC-338399	C MMY V 223M 250AC [U,E,B,S]
6-C1B	EC-350949	C MMY V 223M 250DC [J]
6-C1C	EC-338397	C MMY V 223M 125AC [C,A]
6-X1	EI-318384	OSC X'TAL NC-18C

- Symbols for primary destination
  [A]: AAL(U.S.A.) [S]: SAA(Australia)
  [B]: BEAB(England) [U]: U/T(Universal Area)
  [C]: CSA(Canada) [V]: VDE(W. Germany)
  [E]: CEE(Europe) [Y]: Custom Version
  [J]: JPN(Japan)
- SP (Service Parts) Classification
- These reference symbols correspond with component symbols in the Schematic Diagrams.

The available PC Board Blocks are listed separately.

5. When Part No. is known, Parts Index at end of Parts List can be used to locate where that part is shown in Parts List by its Reference No. listed at right of Part No.

WARNING

⚠ (*) INDICATES SAFETY CRITICAL COMPONENTS. FOR CONTINUED SAFETY, REPLACE SAFETY CRITICAL COMPONENTS ONLY WITH MANUFACTURE'S RECOMMENDED PARTS.

AVERTISSEMENT

⚠ (*) IL INDIQUE LES COMPOSANTS CRITIQUES DE SÉCURITÉ. POUR MAINTENIR LE DEGRÉ DE SÉCURITÉ DE L'APPAREIL, NE REMPLACER QUE DES PIÉCES RECOMMANDEES PAR LÉ FABRICANT.

www.manualscenter.com

1. RECOMMENDED SPARE PARTS

Ref. No.	Part No.	Description
1	BT-368261	TRANS PULSE TC-1027-04
2	ED-356424	D LED BG5525S GREEN
3	ED-382620J	D LED PG5562X GREEN
4	ED-382611J	D LED PY5504S YELLOW
5	ED-361885	D LED SLP-384C-51 GREEN
6	*ED-379981J	D SILICON EG01LF-F4 F10 400/0.7A
7	ED-348990	D SILICON H DS446
8	ED-301911	D SILICON H DS448
9	*ED-382668J	D SILICON PB-112F
10	ED-346560	D ZENER H HZ12L B3
11	ED-346564	D ZENER H HZ15L 1
12	ED-377933	D ZENER H HZ27L 3 F10
13	ED-381270J	D ZENER H HZ33L 1 F10
14	ED-343410	D ZENER H HZ6L A1
15	ED-346529	D ZENER H HZ6L C2
16	ED-351418	D ZENER H HZ7L B1
17	*EF-355226	FUSE BET T 250V 1.00A [B]
18	*EF-359086	FUSE BET T 250V 4.00A [B]
19	*EF-623103	FUSE SEMKO T 250V 1.00A [E,V]
20	*EF-690996	FUSE SEMKO T 250V 4.00A [E,V]
21	*EF-306952	FUSE TSC A 250V 4.00A [U]
22	*EF-327103	FUSE TSC A 250V 500MA [U]
23	*EF-309388	FUSE TSC A 250V 800MA [U]
24	*EF-309390	FUSE TSC 125V 500MA [C,A]
25	*EF-345658	FUSE TSC 125V 8.00A [C,A]
26	*EF-309391	FUSE TSC 125V 800MA [C,A]
27	EI-381282J	IC CXD-1162P
28	EI-345474	IC HA12002
29	EI-375346	IC MM74HC04N
30	EI-344764	IC M5218P-21
31	EI-362588	IC M5238P
32	EI-377191	IC NJM5532D-D
33	EI-368612	IC PCM56P
34	EI-360040	IC TC74HCU04P
35	EI-360037	IC TC74HC00P
36	EI-360039	IC TC74HC08P
37	EI-356049	IC TC74HC139P
38	EI-378921J	IC TC74HC151P
39	EI-379997J	IC YM3623B
40	EI-374176	OSC X'TAL AT-51 16.9344MHZ
41	EJ-379983J	TERMINAL W/SCREW YKD31-0338 8P [SPEAKER TERMINAL]
42	EQ-379982J	RELAY POW G5R-2282P 2NO 48V
43	EQ-348929	RELAY SIG G5A-237P 2TR 12V
44	ER-368226	R CT P R33+R33 5W
45	*ES-355407	SW PUSH ESB-99713V TV-8 [POWER SW]
46	ES-378941J	SW PUSH SPUL12 2-04-02S [MUTE]
47	ES-379984J	SW ROTARY SRRZS4 2-04-04N [SPEAKER SELECTOR]
48	ES-379986J	SW ROTARY SRRZS6 2-06-06N [REC SELECTOR]
49	ES-379988J	SW ROTARY SRRZS8 2-08-03N [TAPE SELECTOR]
50	ET-360646	TR DTA143ES
51	ET-354371	TR DTC124ES
52	ET-357162	TR FET 2SJ74 GR,BL,V
53	ET-354897	TR FET 2SK170 BL,GR,V
54	*ET-359827	TR FET 2SK246 BL
55	*ET-338244	TR 2SA1207 R,S
56	ET-345460	TR 2SA1208 R,S,T
57	ET-348829	TR 2SA1209 S,T
58	*ET-345626	TR 2SA1248 S,T
59	ET-352726	TR 2SA1392 T,U
60	*ET-368757	TR 2SA1490 P,Y
61	*ET-368758	TR 2SA1491 P,Y
62	*ET-348830	TR 2SC2909 S,T
63	ET-370038	TR 2SC2910 S,T
64	ET-348831	TR 2SC2911 S,T
65	*ET-345625	TR 2SC3116 S,T
66	ET-360067	TR 2SC3330 T,U F05
67	ET-349081	TR 2SC3383 S,T
68	*ET-368759	TR 2SC3854 P,Y
69	*ET-368760	TR 2SC3855 P,Y
70	*ET-349459	TR 2SD1406 O,Y,GR
71	EV-379987J	SW ROTARY SRRZS6 2-06-03N [TAPE SELECTOR]
72	EV-379994J	VR ROTARY RK1631110 SPL W104 [BALANCE]
73	EV-379992J	VR ROTARY RK1631210 C104X2 [BASS CONTROL]
74	EV-379993J	VR ROTARY RK1631210 C104X2 [TREBLE CONTROL]
75	EV-379989J	VR ROTARY RK16314A0 A104X4 [MAIN VOLUME]

2. P.C BOARD BLOCK

Ref. No.	Part No.	Description
1A	BA-A2057A020A	PC(#) MAIN BLK AM-73(U) [U]
1B	BA-A2057A020C	PC(#) MAIN BLK AM-73(C) [C,A]
1C	BA-A2057A020D	PC(#) MAIN BLK AM-73(E) [E,B]
1D	BA-A2057A020E	PC(#) MAIN BLK AM-73(V) [V]
2A	BA-A2057A030A	PC(#) VAMP BLK AM-73(U) [U,C,A,E,B]
2B	BA-A2057A030C	PC(#) VAMP BLK AM-73(V) [V]
3A	BA-A2057A040A	PC(#) INPUT BLK AM-73(U) [U,C,A,E,B]
3B	BA-A2057A040B	PC(#) INPUT BLK AM-73(V) [V]
4	BA-A2057A050A	PC DAC BLK

PC (#) MAIN BLK CONSISTS OF FOLLOWING P.C BOARD.

* MAIN AMP P.C BOARD
* SPEAKER TERMINAL P.C BOARD
* FUSE P.C BOARD
* POWER SW P.C BOARD
* INDICATOR P.C BOARD
* POWER LED P.C BOARD
* HEADPHONE P.C BOARD
* REGULATOR P.C BOARD

PC (#) V-AMP BLK CONSISTS OF FOLLOWING P.C BOARD.

* V-AMP P.C BOARD
* EQUALIZER P.C BOARD
* TR P.C BOARD

PC (#) IMPUT BLK CONSISTS OF FOLLOWING P.C BOARD.

* INPUT P.C BOARD
* TONE CONTROL P.C BOARD
* REC SELECTOR P.C BOARD

3. MAIN AMP P.C BOARD

Ref. No.	Part No.	Description
C1	EC-381263J	C EC V SNP 103M 63.0DC
C2	EC-381263J	C EC V SNP 103M 63.0DC
C11	EC-324074	C EC V CUT AS1 101M 63.0DC
C12	EC-324074	C EC V CUT AS1 101M 63.0DC
C13	EC-380325J	C PP V MKP1841 104J 250DC
C14	EC-380325J	C PP V MKP1841 104J 250DC
C17	EC-201636	C EC V CUT AS1 470M 100DC
C18	EC-201636	C EC V CUT AS1 470M 100DC
C28	EC-378515J	C PP V F05 CSF3 513J 125DC
D1	*ED-382668J	D SILICON PB-112F
D2	ED-348990	D SILICON H DS446
D3	ED-348990	D SILICON H DS446
D4	ED-348990	D SILICON H DS446
D5	ED-348990	D SILICON H DS446
D6	ED-348990	D SILICON H DS446
D7	ED-301911	D SILICON H DS448
D8	ED-301911	D SILICON H DS448
D9	ED-301911	D SILICON H DS448
D10	*ED-379981J	D SILICON EG01LF-F4 F10 400/0.7A
D11	*ED-379981J	D SILICON EG01LF-F4 F10 400/0.7A
D12	*ED-379981J	D SILICON EG01LF-F4 F10 400/0.7A
D13	*ED-379981J	D SILICON EG01LF-F4 F10 400/0.7A
D14	ED-356424	D LED BG5525S GREEN
D15	ED-356424	D LED BG5525S GREEN
D16	ED-377933	D ZENER H HZ27L 3 F10
D17	ED-377933	D ZENER H HZ27L 3 F10
D18	ED-377933	D ZENER H HZ27L 3 F10
D19	ED-377933	D ZENER H HZ27L 3 F10
D20	*ED-379981J	D SILICON EG01LF-F4 F10 400/0.7A
D21	*ED-379981J	D SILICON EG01LF-F4 F10 400/0.7A
D22	ED-356424	D LED BG5525S GREEN
D23	ED-356424	D LED BG5525S GREEN
D24	ED-381270J	D ZENER H HZ33L 1 F10
D25	ED-381270J	D ZENER H HZ33L 1 F10
D26	ED-381270J	D ZENER H HZ33L 1 F10
D27	ED-381270J	D ZENER H HZ33L 1 F10
D28	ED-379981J	D SILICON EG01LF-F4 F10 400/0.7A
D29	ED-379981J	D SILICON EG01LF-F4 F10 400/0.7A
D30	ED-356424	D LED BG5525S GREEN
D31	ED-356424	D LED BG5525S GREEN
D32	ED-346564	D ZENER H HZ15L 1
D33	ED-346564	D ZENER H HZ15L 1
D34	*ED-379981J	D SILICON EG01LF-F4 F10 400/0.7A
D35	*ED-379981J	D SILICON EG01LF-F4 F10 400/0.7A
D36	*ED-379981J	D SILICON EG01LF-F4 F10 400/0.7A
D37	*ED-379981J	D SILICON EG01LF-F4 F10 400/0.7A
D38	ED-382611J	D LED PY5504S YELLOW
D39	ED-382611J	D LED PY5504S YELLOW
D40	ED-351418	D ZENER H HZ7L B1
D41	ED-351418	D ZENER H HZ7L B1
D42	ED-346529	D ZENER H HZ6L C2
D43	ED-346560	D ZENER H HZ12L B3
D44	*ED-379981J	D SILICON EG01LF-F4 F10 400/0.7A
D45	ED-379981J	D SILICON EG01LF-F4 F10 400/0.7A
D46	ED-301911	D SILICON H DS448
D47	ED-301911	D SILICON H DS448
IC1	EI-345474	IC HA12002
R1	ER-382671J	R CB H S10 FS RDS 1/4W 6R8J
R2	ER-382671J	R CB H S10 FS RDS 1/4W 6R8J
R3	ER-382671J	R CB H S10 FS RDS 1/4W 6R8J
R4	ER-382671J	R CB H S10 FS RDS 1/4W 6R8J
R5	ER-368226	R CT P R33+R33 5W
R6	ER-368226	R CT P R33+R33 5W
R15	ER-378502J	R CB H S10 FS RDS 1/4W 391J
R18	ER-381264J	R OMF H S20 FS 3W 332J
R22	ER-378499J	R CB H S10 FS RDS 1/4W 100J
R33	ER-382613J	R CB H S10 FS RDS 1/4W 331J
R34	ER-382613J	R CB H S10 FS RDS 1/4W 331J
R39	ER-382613J	R CB H S10 FS RDS 1/4W 331J
R40	ER-382613J	R CB H S10 FS RDS 1/4W 331J
R43	ER-324185	R CB H S10 FS RDS 1/4W 221J
R44	ER-324185	R CB H S10 FS RDS 1/4W 221J
R45	ER-378846J	R CB H S10 FS RDS 1/4W 102J
R49	ER-324185	R CB H S10 FS RDS 1/4W 221J
R50	ER-324185	R CB H S10 FS RDS 1/4W 221J
R51	ER-381265J	R OMF H S20 FS 3W 561J
R52	ER-381265J	R OMF H S20 FS 3W 561J
R54	ER-382614J	R CB H S10 FS RDS 1/4W 2R2J
R55	ER-382614J	R CB H S10 FS RDS 1/4W 2R2J
R56	ER-382614J	R CB H S10 FS RDS 1/4W 2R2J
R57	ER-382614J	R CB H S10 FS RDS 1/4W 2R2J
R58	ER-382614J	R CB H S10 FS RDS 1/4W 2R2J
R59	ER-382614J	R CB H S10 FS RDS 1/4W 2R2J
TR1	ET-349081	TR 2SC3383 S,T
TR3	ET-338244	TR 2SA1207 R,S
TR4	ET-360067	TR 2SC3330 T,U F05
TR5	ET-360067	TR 2SC3330 T,U F05
TR6	ET-338244	TR 2SA1207 R,S
TR7	ET-348830	TR 2SC2909 S,T
TR8	ET-338244	TR 2SA1207 R,S
TR9	ET-348830	TR 2SC2909 S,T
TR10	ET-352726	TR 2SA1392 T,U
TR11	ET-349081	TR 2SC3383 S,T
TR12	*ET-338244	TR 2SA1207 R,S
TR13	*ET-348830	TR 2SC2909 S,T
TR14	*ET-359827	TR FET 2SK246 BL
TR15	*ET-349459	TR 2SD1406 O,Y,GR
TR901	*ET-345625	TR 2SC3116 S,T
TR902	*ET-368760	TR 2SC3855 P,Y
TR903	*ET-368760	TR 2SC3855 P,Y
TR904	*ET-368758	TR 2SA1491 P,Y
F3A	*EF-327103	FUSE TSC A 250V 500MA [U]
F3B	*EF-309390	FUSE TSC 125V 500MA [C,A]
F3C	*EF-623103	FUSE SEMKO T 250V 1.00A [E,V]
F3D	*EF-355226	FUSE BET T 250V 1.00A [B]
F4A	*EF-327103	FUSE TSC A 250V 500MA [U]
F4B	*EF-309390	FUSE TSC 125V 500MA [C,A]
F4C	*EF-623103	FUSE SEMKO T 250V 1.00A [E,V]
F4D	*EF-355226	FUSE BET T 250V 1.00A [B]
F5A	*EF-309388	FUSE TSC A 250V 800MA [U]
F5B	*EF-309391	FUSE TSC 125V 800MA [C,A]
F5C	*EF-623103	FUSE SEMKO T 250V 1.00A [E,V]
F5D	*EF-355226	FUSE BET T 250V 1.00A [B]

4. SPEAKER TERMINAL P.C BOARD

Ref. No.	Part No.	Description
D101	ED-348990	D SILICON H DS446
D102	ED-348990	D SILICON H DS446
D103	ED-348990	D SILICON H DS446
D104	ED-348990	D SILICON H DS446
L101	EO-332116	COIL FIX 2 103AK-006A 2R2K
L102	EO-332116	COIL FIX 2 103AK-006A 2R2K [V]
L103	EO-332116	COIL FIX 2 103AK-006A 2R2K [V]
RL101	EQ-379982J	RELAY POW G5R-2282P 2NO 48V
RL102	EQ-379982J	RELAY POW G5R-2282P 2NO 48V
RL103	EQ-348929	RELAY SIG G5A-237P 2TR 12V
R101	ER-381266J	R OMF H S20 FS 3W 100J
R102	ER-381266J	R OMF H S20 FS 3W 100J
R103	ER-381265J	R OMF H S20 FS 3W 561J
TM901	EJ-379983J	TERMINAL W/SCREW YKD31-0338 8P [SPEAKER TERMINAL]

5. FUSE P.C BOARD

Ref. No.	Part No.	Description
L301	EO-332116	COIL FIX 2 103AK-006A 2R2K
F1A	*EF-306952	FUSE TSC A 250V 4.00A [U]
F1B	*EF-345658	FUSE TSC 125V 8.00A [C,A]
F1C	*EF-690996	FUSE SEMKO T 250V 4.00A [E,V]
F1D	*EF-359086	FUSE BET T 250V 4.00A [B]
F2	*EF-306952	FUSE TSC A 250V 4.00A [U]

6. POWER SW P.C BOARD

Ref. No.	Part No.	Description
C401A	*EC-320548	C CE V F 103Z 250AC [U]
C401B	*EC-338496	C CE V FZ 472P 400AC [C,A,E,V,B]
SW1	*ES-355407	SW PUSH ESB-99713V TV-8 [POWER SW]

7. INDICATOR P.C BOARD

Ref. No.	Part No.	Description
D501	ED-382620J	D LED PG5562X GREEN
D502	ED-382620J	D LED PG5562X GREEN
D503	ED-382620J	D LED PG5562X GREEN
D504	ED-382620J	D LED PG5562X GREEN

8. POWER LED P.C BOARD

Ref. No.	Part No.	Description
D601	ED-361885	D LED SLP-384C-51 GREEN
D602	ED-361885	D LED SLP-384C-51 GREEN

9. HEADPHONE P.C BOARD

Ref. No.	Part No.	Description
J701	EJ-369995	PHONE J 3P HLJ0540-410 GP 6.3 [PHONES]

10. REGULATOR P.C BOARD

Ref. No.	Part No.	Description
TR801	*ET-368759	TR 2SC3854 P,Y
TR802	*ET-368757	TR 2SA1490 P,Y
TR803	*ET-345625	TR 2SC3116 S,T
TR804	*ET-345626	TR 2SA1248 S,T
TR805	*ET-345625	TR 2SC3116 S,T
TR806	*ET-345626	TR 2SA1248 S,T
TR807	*ET-345625	TR 2SC3116 S,T
TR808	*ET-345626	TR 2SA1248 S,T
TR809	*ET-345625	TR 2SC3116 S,T

www.manualscenter.com

11. V-AMP P.C BOARD

Ref. No.	Part No.	Description
IC1	EI-362588	IC M5238P
J1	EJ-336904	PIN J AJC-036-ACB P 6P
J2	EJ-336904	PIN J AJC-036-ACB P 6P
R5	ER-338000	R FUSE H S10 ERD2FC 1/4W 2200G
R13	ER-338000	R FUSE H S10 ERD2FC 1/4W 2200G
R27	ER-378498J	R CB H S10 FS RDS 1/4W 682J
R28	ER-378498J	R CB H S10 FS RDS 1/4W 682J
R30	ER-372991	R CB H S10 FS RDS 1/4W 101J
R33	ER-372991	R CB H S10 FS RDS 1/4W 101J
R36	ER-378499J	R CB H S10 FS RDS 1/4W 100J
R37	ER-378499J	R CB H S10 FS RDS 1/4W 100J
R345	ER-382603J	R CB H S10 FS RDS 1/4W 471J
R346	ER-382603J	R CB H S10 FS RDS 1/4W 471J
R347	ER-382603J	R CB H S10 FS RDS 1/4W 471J
TR1	ET-354897	TR FET 2SK170 BL,GR,V
TR2	ET-357162	TR FET 2SJ74 GR,BL,V
TR3	ET-370038	TR 2SC2910 S,T
TR4	ET-345460	TR 2SA1208 R,S,T
TR5	ET-338244	TR 2SA1207 R,S
TR6	ET-348830	TR 2SC2909 S,T
TR7	ET-348830	TR 2SC2909 S,T
TR8	ET-348830	TR 2SC2909 S,T
TR9	ET-338244	TR 2SA1207 R,S
TR10	ET-348830	TR 2SC2909 S,T
TR11	ET-348829	TR 2SA1209 S,T
TR12	ET-348831	TR 2SC2911 S,T
TR13	ET-348831	TR 2SC2911 S,T
TR14	ET-348829	TR 2SA1209 S,T
TR15	ET-348831	TR 2SC2911 S,T
TR16	ET-348829	TR 2SA1209 S,T
VR1	EV-371308	R S-FIX V VM6CK(PH) 0.30W 201

12. EQUALIZER P.C BOARD

Ref. No.	Part No.	Description
D101	ED-356424	D LED BG5525S GREEN
D102	ED-343410	D ZENER H HZ6L A1
D103	ED-343410	D ZENER H HZ6L A1
J101	EJ-336904	PIN J AJC-036-ACB P 6P
J102	EJ-336904	PIN J AJC-036-ACB P 6P
R127	ER-382604J	R CB H S10 FS RDS 1/4W 390J
R128	ER-382604J	R CB H S10 FS RDS 1/4W 390J
TR101	ET-354897	TR FET 2SK170 BL,GR,V
TR102	ET-357162	TR FET 2SJ74 GR,BL,V
TR103	ET-352726	TR 2SA1392 T,U
TR104	ET-349081	TR 2SC3383 S,T
TR105	ET-349081	TR 2SC3383 S,T
TR106	ET-352726	TR 2SA1392 T,U
VR101	EV-360948	R S-FIX V RVF8W01 0/10W 104

13. TR P.C BOARD

Ref. No.	Part No.	Description
D201	ED-301911	D SILICON H DS448
TR905	ET-368758	TR 2SA1491 P,Y
VR201	EV-346380	R S-FIX H RH1051C 0.15W 332

14. INPUT P.C BOARD

Ref. No.	Part No.	Description
D1	ED-343410	D ZENER H HZ6L A1
SW301	ES-379986J	SW ROTARY SRRZS6 2-06-06N [INPUT SELECTOR]
SW302	EV-379987J	SW ROTARY SRRZS6 2-06-03N [TAPE SELECTOR]
SW303	ES-379988J	SW ROTARY SRRZS8 2-08-03N [DIRECT OPERATION]
SW304	ES-379984J	SW ROTARY SRRZS4 2-04-04N [DIGITAL INPUT]
TR1	ET-360646	TR DTA143ES
TR2	ET-360646	TR DTA143ES
TR3	ET-360646	TR DTA143ES
VR1	EV-379989J	VR ROTARY RK16314A0 A104X4 [MAIN VOLUME]

15. TONE CONTROL P.C BOARD

Ref. No.	Part No.	Description
IC1	EI-344764	IC M5218P-21
SW1	ES-379984J	SW ROTARY SRRZS4 2-04-04N [SPEAKER SELECTOR]
VR1	EV-379992J	VR ROTARY RK1631210 C104X2 [BASS CONTROL]
VR2	EV-379993J	VR ROTARY RK1631210 C104X2 [TREBLE CONTROL]

16. REC SELECTOR P.C BOARD

Ref. No.	Part No.	Description
D1	ED-301911	D SILICON H DS448
SW1	ES-379986J	SW ROTARY SRRZS6 2-06-06N [REC SELECTOR]
SW2	ES-379988J	SW ROTARY SRRZS8 2-08-03N [TAPE SELECTOR]
SW3	ES-378941J	SW PUSH SPUL12 2-04-02S [MUTE]
VR1	EV-379994J	VR ROTARY RK1631110 SPL W104 [BALANCE]

17. DAC P.C BOARD

Ref. No.	Part No.	Description
C29	EC-380325J	C PP V MKP1841 104J 250DC
D1	ED-301911	D SILICON H DS448
D2	ED-301911	D SILICON H DS448
D3	ED-301911	D SILICON H DS448
D4	ED-301911	D SILICON H DS448
D5	ED-301911	D SILICON H DS448
FL1	EO-378920J	COIL VARI 1 25-5721-13
IC2	EI-360039	IC TC74HC08P
IC3	EI-360040	IC TC74HCU04P
IC4	EI-378921J	IC TC74HC151P
IC5	EI-360037	IC TC74HC00P
IC6	EI-360040	IC TC74HCU04P
IC7	EI-375346	IC MM74HC04N
IC8	EI-360037	IC TC74HC00P
IC9	EI-379997J	IC YM3623B
IC10	EI-381282J	IC CXD-1162P
IC11	EI-356049	IC TC74HC139P
IC12	EI-368612	IC PCM56P
IC13	EI-377191	IC NJM5532D-D
J1	EJ-377170	PIN J YKB11-0473 GP ORANGE 1P [DIGITAL 1 IN]
J2	EJ-377170	PIN J YKB11-0473 GP ORANGE 1P [DIGITAL 2 IN]
J3	EJ-377170	PIN J YKB11-0473 GP ORANGE 1P [DIGITAL 3 IN]
J4	EJ-377170	PIN J YKB11-0473 GP ORANGE 1P [DIGITAL 2 OUT]
J5	EJ-377170	PIN J YKB11-0473 GP ORANGE 1P [DIGITAL 3 OUT]
J11	EJ-368258	SOCKET OPTICAL TORX172 [OPTICAL IN]
L1	EO-343816	COIL FIX 1 LAL04 681K
TR1	ET-354371	TR DTC124ES
TR2	ET-352726	TR 2SA1392 T,U
TR3	ET-354371	TR DTC124ES
TR4	ET-352726	TR 2SA1392 T,U
TR5	ET-349081	TR 2SC3383 S,T
TR6	ET-349081	TR 2SC3383 S,T
TR7	ET-360646	TR DTA143ES
T1	BT-368261	TRANS PULSE TC-1027-04
T2	BT-368261	TRANS PULSE TC-1027-04
VR1	EV-337996	R S-FIX H RVF8P01 0.10W 104
X1	EI-374176	OSC X'TAL AT-51 16.9344MHZ

18. FINAL ASSEMBLY BLOCK

Ref. No.	Part No.	Description
6	ZS-308846	T2BR30X08STL BZN PROJECTION
25	EZ-200473	SILICON RUBBER SHEET TC-30
26	EZ-345459	TRANSISTOR SUPPORT BFG-20T0-3P
33A	*BT-379958J	TRANS POW A2057(U) [U]
33B	*BT-379961J	TRANS POW A2057(C,A) [C,A]
33C	*BT-379962J1	TRANS POW A2057(EV) [E,V]
33D	*BT-379963J1	TRANS POW A2057(B) [B]
34	ZS-365373	ST BID40X10STL CMT CUP
35A	SP-379908J	PANEL REAR AM-73(U) [U]
35B	SP-379909J	PANEL REAR AM-73(A,C) [C,A]
35C	SP-379910J	PANEL REAR AM-73(E,V) [E,V]
35D	SP-379911J	PANEL REAR AM-73(B) [B]
36A	*EJ-337405	SOCKET OUT S2T733T164 JUC 3X2P [U]
36B	*EJ-352642	SOCKET OUTLET S2T733T114T [C,A]
37A	*EW-363658	AC CORD 200 0129AVFF B100 A U/ [U]
37B	*EW-363646	AC CORD 200 238APSPT2 B100 A U [C,A]
37C	*EW-363671	AC CORD 200 0364 LCFL B100 A E [E,V]
37D	*EW-363683	AC CORD 200 LCFL B100 A B [B]
38	*ES-349070	SW SELECTOR YKS11-0002 02-4 [U]
39	EJ-329610	TERMINAL W/SCREW UB-0067 L 1P
40	SE-375348	ESCUTCHEON
41	ZS-362151	PT BR30X12STL BNI
42	EJ-348218	PLUG SHORT PIN P2138
43	ZS-351886	PT BR30X10STL BNI
44	BD-A2057A060A	PANEL FRONT BLK AM-73-B
58	SK-379900J	KNOB MUTE
59	ZW-368205	FLEXIBLE RING 2414-0-0-086-01
60	SK-379887J	KNOB VR B PART
61	SK-379898J	KNOB BALANCE PART
62	SK-379893J	KNOB SELECTOR PART
63	SK-379896J	KNOB SP PART
64	SK-373236B	KNOB POWER-B
67	SA-B368687	FOOT ROUND SHAPED PART
68	ZS-304021	ST BID40X12STL CMT
69	SP-379905J	CAVER UPPER(2) B
72	ZS-308846	T2BR30X08STL BZN PROJECTION
73	ZS-381482J	SCREW TOP COVER(3) B OM
74	SP-381364J	SIDE BOARD(L)
75	SP-381365J	SIDE BOARD(R)
76	ZW-376292	WASHER SIDE BOARD

www.manualscenter.com

FINAL ASSEMBLY BLOCK

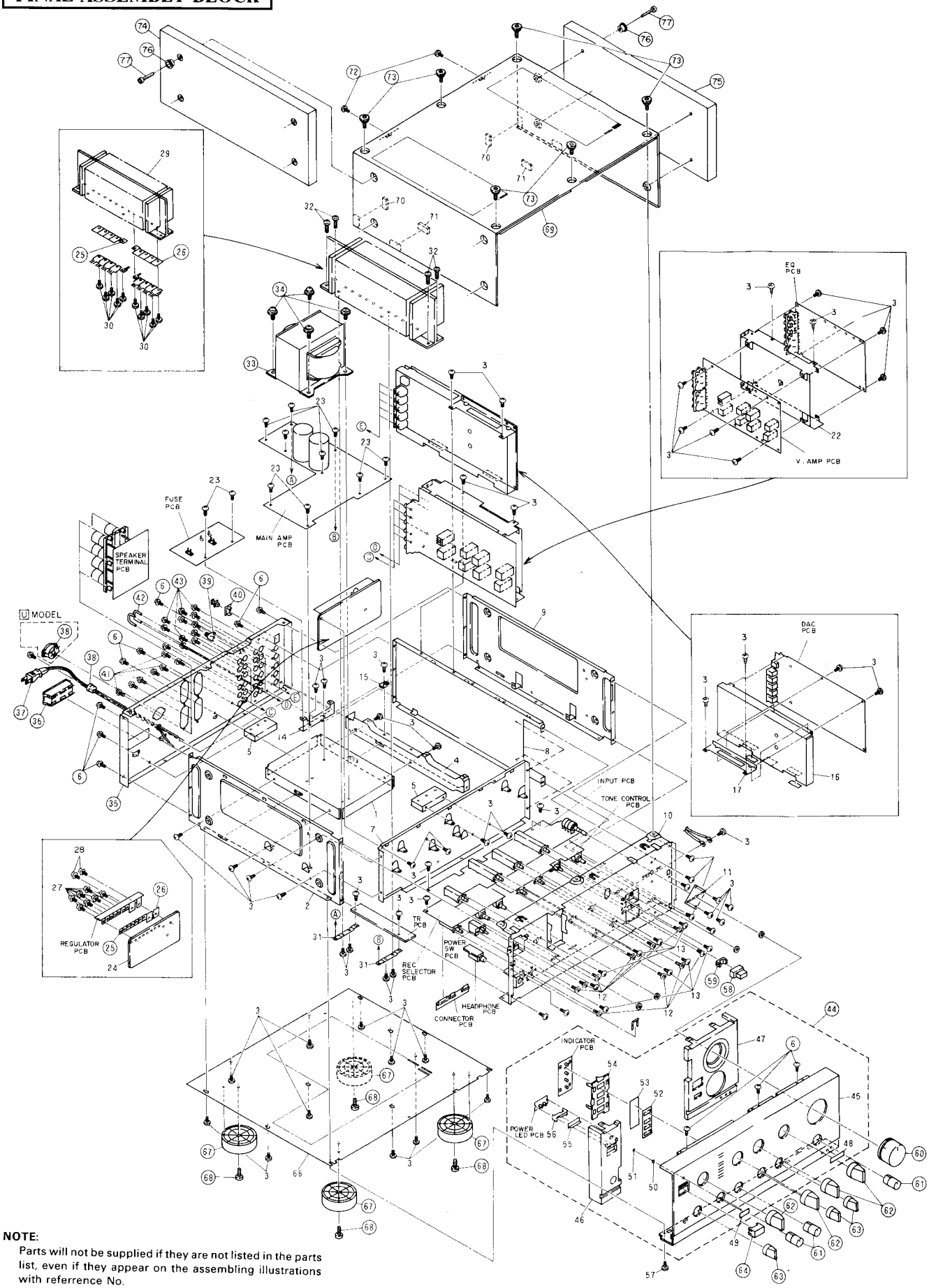

NOTE:

Parts will not be supplied if they are not listed in the parts list, even if they appear on the assembling illustrations with referrence No.

www.manualscenter.com

INDEX

Part No.	Ref. No.	Part No.	Ref. No.	Part No.	Ref. No.	Part No.	Ref. No.
BA-A2057A020A	2-1A	ED-377933	3-D18	EI-375346	17-IC7	ES-349070	18-38
BA-A2057A020C	2-1B	ED-377933	3-D19	EI-377191	1-32	ES-355407	1-45
BA-A2057A020D	2-1C	ED-379981J	1-6	EI-377191	17-IC13	ES-355407	6-SW1
BA-A2057A020E	2-1D	ED-379981J	3-D10	EI-378921J	1-38	ES-378941J	1-46
BA-A2057A030A	2-2A	ED-379981J	3-D11	EI-378921J	17-IC4	ES-378941J	16-SW3
BA-A2057A030C	2-2B	ED-379981J	3-D12	EI-379997J	1-39	ES-379984J	1-47
BA-A2057A040A	2-3A	ED-379981J	3-D13	EI-379997J	17-IC9	ES-379984J	14-SW304
BA-A2057A040B	2-3B	ED-379981J	3-D20	EI-381282J	1-27	ES-379984J	15-SW1
BA-A2057A050A	2-4	ED-379981J	3-D21	EI-381282J	17-IC10	ES-379986J	1-48
BD-A2057A060A	18-44	ED-379981J	3-D28	EJ-329610	18-39	ES-379986J	14-SW301
BT-368261	1-1	ED-379981J	3-D29	EJ-336904	11-J1	ES-379986J	16-SW1
BT-368261	17-T1	ED-379981J	3-D34	EJ-336904	11-J2	ES-379988J	1-49
BT-368261	17-T2	ED-379981J	3-D35	EJ-336904	12-J101	ES-379988J	14-SW303
BT-379958J	18-33A	ED-379981J	3-D36	EJ-336904	12-J102	ES-379988J	16-SW2
BT-379961J	18-33B	ED-379981J	3-D37	EJ-337405	18-36A	ET-338244	1-55
BT-379962J1	18-33C	ED-379981J	3-D44	EJ-348218	18-42	ET-338244	3-TR3
BT-379963J1	18-33D	ED-379981J	3-D45	EJ-352642	18-36B	ET-338244	3-TR6
EC-201636	3-C17	ED-381270J	1-13	EJ-368258	17-J11	ET-338244	3-TR8
EC-201636	3-C18	ED-381270J	3-D24	EJ-369995	9-J701	ET-338244	3-TR12
EC-320548	6-C401A	ED-381270J	3-D25	EJ-377170	17-J1	ET-338244	11-TR5
EC-324074	3-C11	ED-381270J	3-D26	EJ-377170	17-J2	ET-338244	11-TR9
EC-324074	3-C12	ED-381270J	3-D27	EJ-377170	17-J3	ET-345460	1-56
EC-338496	6-C401B	ED-382611J	1-4	EJ-377170	17-J4	ET-345460	11-TR4
EC-378515J	3-C28	ED-382611J	3-D38	EJ-377170	17-J5	ET-345625	1-65
EC-380325J	3-C13	ED-382611J	3-D39	EJ-379983J	1-41	ET-345625	3-TR901
EC-380325J	3-C14	ED-382620J	1-3	EJ-379983J	4-TM901	ET-345625	10-TR803
EC-380325J	17-C29	ED-382620J	7-D501	EO-332116	4-L101	ET-345625	10-TR805
EC-381263J	3-C1	ED-382620J	7-D502	EO-332116	4-L102	ET-345625	10-TR807
EC-381263J	3-C2	ED-382620J	7-D503	EO-332116	4-L103	ET-345625	10-TR809
ED-301911	1-8	ED-382620J	7-D504	EO-332116	5-L301	ET-345626	1-58
ED-301911	3-D7	ED-382668J	1-9	EO-343816	17-L1	ET-345626	10-TR804
ED-301911	3-D8	ED-382668J	3-D1	EO-378920J	17-FL1	ET-345626	10-TR806
ED-301911	3-D9	EF-306952	1-21	EQ-348929	1-43	ET-345626	10-TR808
ED-301911	3-D46	EF-306952	5-F1A	EQ-348929	4-RL103	ET-348829	1-57
ED-301911	3-D47	EF-306952	5-F2	EQ-379982J	1-42	ET-348829	11-TR11
ED-301911	13-D201	EF-309388	1-23	EQ-379982J	4-RL101	ET-348829	11-TR14
ED-301911	16-D1	EF-309388	3-F5A	EQ-379982J	4-RL102	ET-348829	11-TR16
ED-301911	17-D1	EF-309390	1-24	ER-324185	3-R43	ET-348830	1-62
ED-301911	17-D2	EF-309390	3-F3B	ER-324185	3-R44	ET-348830	3-TR7
ED-301911	17-D3	EF-309390	3-F4B	ER-324185	3-R49	ET-348830	3-TR9
ED-301911	17-D4	EF-309391	1-26	ER-324185	3-R50	ET-348830	3-TR13
ED-301911	17-D5	EF-309391	3-F5B	ER-338000	11-R5	ET-348830	11-TR6
ED-343410	1-14	EF-327103	1-22	ER-338000	11-R13	ET-348830	11-TR7
ED-343410	12-D102	EF-327103	3-F3A	ER-368226	1-44	ET-348830	11-TR8
ED-343410	12-D103	EF-327103	3-F4A	ER-368226	3-R5	ET-348830	11-TR10
ED-343410	14-D1	EF-345658	1-25	ER-368226	3-R6	ET-348831	1-64
ED-346529	1-15	EF-345658	5-F1B	ER-372991	11-R30	ET-348831	11-TR12
ED-346529	3-D42	EF-355226	1-17	ER-372991	11-R33	ET-348831	11-TR13
ED-346560	1-10	EF-355226	3-F3D	ER-378498J	11-R27	ET-348831	11-TR15
ED-346560	3-D43	EF-355226	3-F4D	ER-378498J	11-R28	ET-349081	1-67
ED-346564	1-11	EF-355226	3-F5D	ER-378499J	3-R22	ET-349081	3-TR1
ED-346564	3-D32	EF-359086	1-18	ER-378499J	11-R36	ET-349081	3-TR11
ED-346564	3-D33	EF-359086	5-F1D	ER-378499J	11-R37	ET-349081	12-TR104
ED-348990	1-7	EF-623103	1-19	ER-378502J	3-R15	ET-349081	12-TR105
ED-348990	3-D2	EF-623103	3-F3C	ER-378846J	3-R45	ET-349081	17-TR5
ED-348990	3-D3	EF-623103	3-F4C	ER-381264J	3-R18	ET-349081	17-TR6
ED-348990	3-D4	EF-623103	3-F5C	ER-381265J	3-R51	ET-349459	1-70
ED-348990	3-D5	EF-690996	1-20	ER-381265J	3-R52	ET-349459	3-TR15
ED-348990	3-D6	EF-690996	5-F1C	ER-381265J	4-R103	ET-352726	1-59
ED-348990	4-D101	EI-344764	1-30	ER-381266J	4-R101	ET-352726	3-TR10
ED-348990	4-D102	EI-344764	15-IC1	ER-381266J	4-R102	ET-352726	12-TR103
ED-348990	4-D103	EI-345474	1-28	ER-382603J	11-R45	ET-352726	12-TR106
ED-348990	4-D104	EI-345474	3-IC1	ER-382603J	11-R46	ET-352726	17-TR2
ED-351418	1-16	EI-356049	1-37	ER-382603J	11-R47	ET-352726	17-TR4
ED-351418	3-D40	EI-356049	17-IC11	ER-382604J	12-R127	ET-354371	1-51
ED-351418	3-D41	EI-360037	1-35	ER-382604J	12-R128	ET-354371	17-TR1
ED-356424	1-2	EI-360037	17-IC5	ER-382613J	3-R33	ET-354371	17-TR3
ED-356424	3-D14	EI-360037	17-IC8	ER-382613J	3-R34	ET-354897	1-53
ED-356424	3-D15	EI-360039	1-36	ER-382613J	3-R39	ET-354897	11-TR1
ED-356424	3-D22	EI-360039	17-IC2	ER-382613J	3-R40	ET-354897	12-TR101
ED-356424	3-D23	EI-360040	1-34	ER-382614J	3-R54	ET-357162	1-52
ED-356424	3-D30	EI-360040	17-IC3	ER-382614J	3-R55	ET-357162	11-TR2
ED-356424	3-D31	EI-360040	17-IC6	ER-382614J	3-R56	ET-357162	12-TR102
ED-356424	12-D101	EI-362588	1-31	ER-382614J	3-R57	ET-359827	1-54
ED-361885	1-5	EI-362588	11-IC1	ER-382614J	3-R58	ET-359827	3-TR14
ED-361885	8-D601	EI-368612	1-33	ER-382614J	3-R59	ET-360067	1-66
ED-361885	8-D602	EI-368612	17-IC12	ER-382671J	3-R1	ET-360067	3-TR4
ED-377933	1-12	EI-374176	1-40	ER-382671J	3-R2	ET-360067	3-TR5
ED-377933	3-D16	EI-374176	17-X1	ER-382671J	3-R3	ET-360646	1-50
ED-377933	3-D17	EI-375346	1-29	ER-382671J	3-R4	ET-360646	14-TR1

INDEX

Part No.	Ref. No.	Part No.	Ref. No.	Part No.	Ref. No.	Part No.	Ref. No.
ET-360646	14-TR2						
ET-360646	14-TR3						
ET-360646	17-TR7						
ET-368757	1-60						
ET-368757	10-TR802						
ET-368758	1-61						
ET-368758	3-TR904						
ET-368758	13-TR905						
ET-368759	1-68						
ET-368759	10-TR801						
ET-368760	1-69						
ET-368760	3-TR902						
ET-368760	3-TR903						
ET-370038	1-63						
ET-370038	11-TR3						
EV-337996	17-VR1						
EV-346380	13-VR201						
EV-360948	12-VR101						
EV-371308	11-VR1						
EV-379987J	1-71						
EV-379987J	14-SW302						
EV-379989J	1-75						
EV-379989J	14-VR1						
EV-379992J	1-73						
EV-379992J	15-VR1						
EV-379993J	1-74						
EV-379993J	15-VR2						
EV-379994J	1-72						
EV-379994J	16-VR1						
EW-363646	18-37B						
EW-363658	18-37A						
EW-363671	18-37C						
EW-363683	18-37D						
EZ-200473	18-25						
EZ-345459	18-26						
SA-B368687	18-67						
SE-375348	18-40						
SK-373236B	18-64						
SK-379887J	18-60						
SK-379893J	18-62						
SK-379896J	18-63						
SK-379898J	18-61						
SK-379900J	18-58						
SP-379905J	18-69						
SP-379908J	18-35A						
SP-379909J	18-35B						
SP-379910J	18-35C						
SP-379911J	18-35D						
SP-381364J	18-74						
SP-381365J	18-75						
ZS-304021	18-68						
ZS-308846	18-6						
ZS-308846	18-72						
ZS-351886	18-43						
ZS-362151	18-41						
ZS-365373	18-34						
ZS-381482J	18-73						
ZW-368205	18-59						
ZW-376292	18-76						

www.manualscenter.com

ABBREVIATIONS (AMPLIFIER)

ABBREVIATIONS	EXPLANATION
A	Analog
AC	Alternating Current
AMP	AMPlifier
CD	Compact Disc
COM	COMmon
D	Digital
D/A	Digital to Analog
DAC	Digital to Analog Converter
DAT	Digital Audio Tape recorder
DC	Direct Current
GND	GrouND
L	Left
LED	Light Emitting Diode
MC	Moving Coil
MM	Moving Magnet
PCB	Printed Circuit Board
R	Right
REG.	REGulator
REC	RECord
TR	TRansistor
SW	SWitch
V.AMP	Voltage AMPlifier
V.DISC	Video DISC
VR	Variable Resistance
VTR	Video Tape Recorder

AKAI ELECTRIC CO., LTD.

12-14, 2-Chome, Higashi-Kojiya, Ohta-Ku, Tokyo, Japan

SERVICE DEPARTMENT TEL: Tokyo(745)9884 TELEX: J26261

Printed No. 880325-G1-2900 Printed Date: April 20, 1988

350 Printed in Japan

AKAI

MODEL AM-73

SCHEMATIC DIAGRAM AND PC BOARDS

TABLE OF CONTENTS

1. IC's 1
2. BLOCK DIAGRAM 5
3. CONNECTION DIAGRAM 6
4. MAIN AMP, V AMP (212) AND OTHER PC BOARDS 7
5. EQUALIZER AND INPUT SCHEMATIC DIAGRAM 8
6. EQUALIZER, INPUT, TONE CONTROL AND OTHER PC BOARDS 9
7. DAC SCHEMATIC DIAGRAM 10
8. DAC PC BOARD 11

74HC139 (Dual 2 to 4 Demultiplexers)

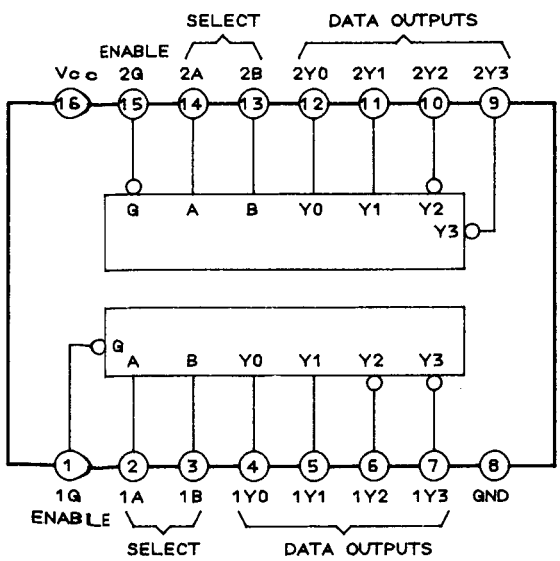

Function Table

INPUTS			OUTPUTS			
ENABLE	SELECT					
G	B	A	Y0	Y1	Y2	Y3
H	X	X	H	H	H	H
L	L	L	L	H	H	H
L	L	H	H	L	H	H
L	H	L	H	H	L	H
L	H	H	H	H	H	L

www.manualscenter.com

74HC151P (8 to 1 Data Selector)

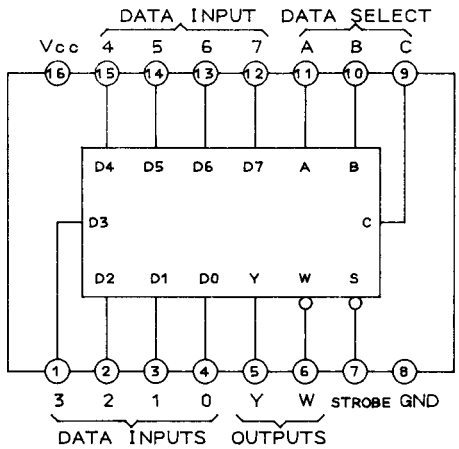

Function Table

INPUTS				OUTPUTS	
SELECT			STROBE	Y	W
C	B	A	S		
X	X	X	H	L	H
L	L	L	L	D0	$\overline{D0}$
L	L	H	L	D1	$\overline{D1}$
L	H	L	L	D2	$\overline{D2}$
L	H	H	L	D3	$\overline{D3}$
H	L	L	L	D4	$\overline{D4}$
H	L	H	L	D5	$\overline{D5}$
H	H	L	L	D6	$\overline{D6}$
H	H	H	L	D7	$\overline{D7}$

PCM56P (D/A Convertor)

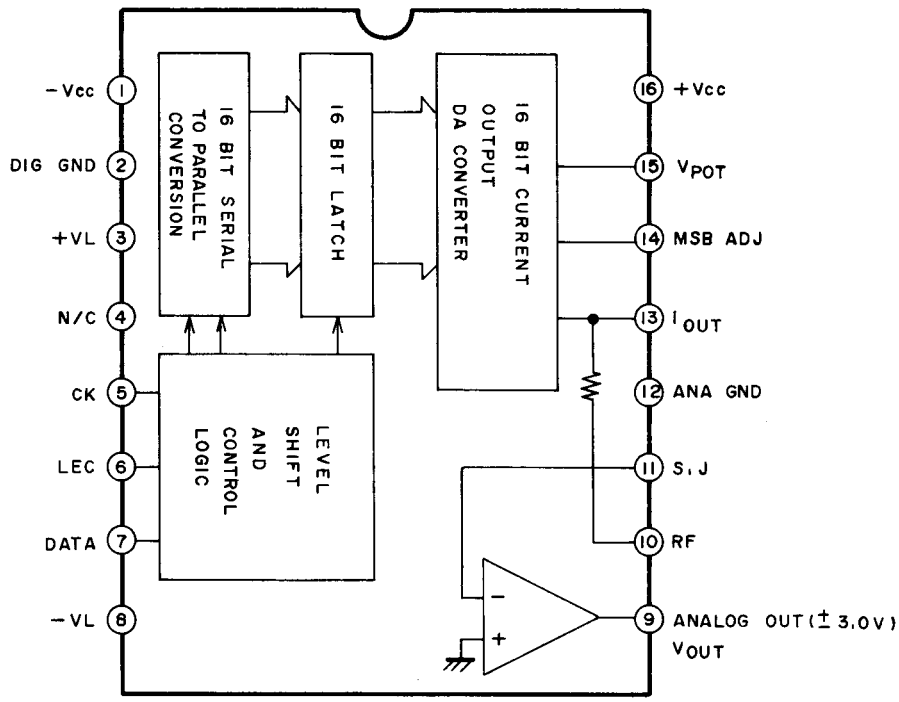

PIN NO.	SYMBOL	DESCRIPTION
1	-Vcc	Analog + power supply
2	DIG GND	Digital ground
3	+V1	Logic + power supply
4	N.C	
5	CK	Clock input
6	LEC	Latch enable control
7	DATA	Data input
8	-V1	Logic - power supply
9	Vout	Voltage output
10	RF	Terminal for feedback resistor
11	SJ	Summing junction (OP Amp input)
12	ANA GND	Analog ground
13	Iout	Current output
14	MSB ADJ	Terminal for MSB adjustment
15	Vpot	Terminal for potentiometer
16	+Vcc	Analog + power supply

(PU): Terminal pull upped inside of IC

CXD1162P (4fs Over Sampling Digital Filter)

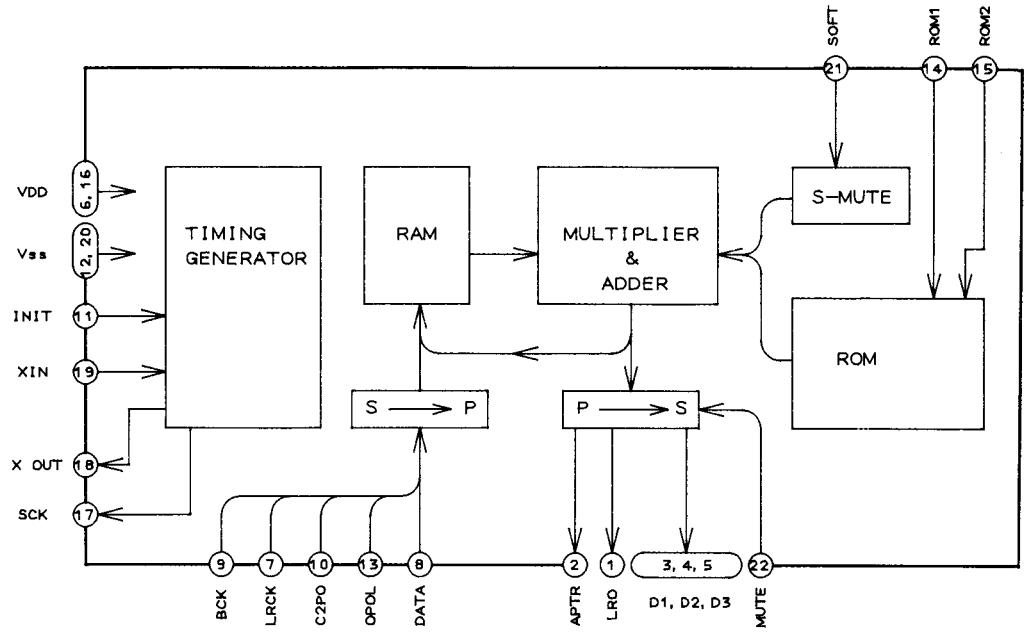

PIN NO.	SYMBOL	I/O	DESCRIPTION OF TERMINAL
1	LRO	O	LRCK Output
2	APTR	O	Aperture Clock for R Channel
3	D_1	O	BCK Output
4	D_2	O	DATA Output
5	D_3	O	WCK Output
6	V_{DD}	—	+B (+5V)
7	LRCK	I	LRCK Input
8	DATA	I	16 bit x 2 Serial DATA Input
9	BCK	I	BCK Input
10	C2PO	I	Error Flag Input
11	$\overline{INIT}$	I	Power "ON" Reset Input
12	V_{SS}	—	−B (0V)
13	DPOL	I	
14	ROM1	I	ROM Select for 83rd Order
15	ROM2	I	ROM Select for 21st Order
16	V_{DD}	—	+B (+5V)
17	SCK	O	System Clock Output for External IC (384fs)
18	XOUT	O	X'tal OSC Output (384fs)
19	XIN	I	X'tal OSC Input (384fs)
20	V_{SS}	—	−B (0V)
21	SOFT	I	Soft Muting ON/$\overline{OFF}$ Select
22	MUTE		Set the Output to "0" or OFF-SET

www.manualscenter.com

YM3623 (Digital Audio Interface Reciver)

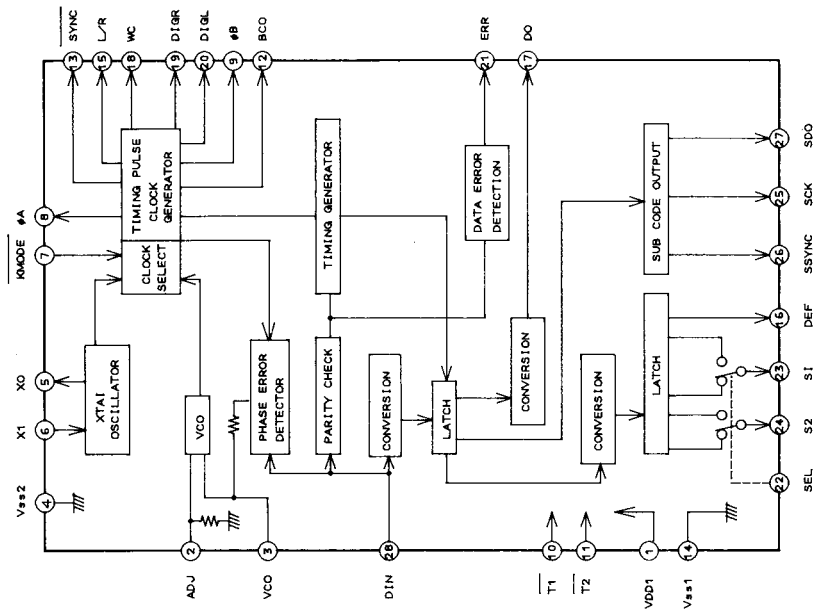

PIN NO.	SYMBOL	I/O	DESCRIPTION OF TERMINAL
1	V_{DD1}		+B (+5V) for System Section
2	ADJ	I	No Connection
3	VCO	I/O	External Capaciter Connection Terminal for VCO
4	V_{SS2}		GND for VCO Circuit
5	XO	O	X'tal Oscillator
6	XI	I	
7	$\overline{\text{K MODE}}$	I(P)	H: When Data Input into DIN Terminal, Clock Signal Abstracted from Input Data by PLL Circuit, If No Data Input Data into DIN Clock Signal Use from X'tal OSC. L: Always Use X'tal Oscillation
8	φA	O	• When Using X'tal OSC = 16.934 MHz • When Operating PLL Circuit = Changing the Frequency According to Input Data of DIN. (About 16.934 MHz at fs = 44.1 kHz)
9	φB	O	• When Using X'tal OSC = φA/3 • When Operating PLL Circuit = Changing the Frequency According to Input Data. (About 5.6448 MHz at fs = 44.1 kHz)
10	$\overline{T1}$	I(P)	For Check of Internal Circuit
11	$\overline{T2}$	I(P)	
12	BCO	O	Timing Clock for the Output Signal from DO
13	$\overline{\text{SYNC}}$	O	SYNCHRONOUS Signal Output
14	V_{SS1}	O	GND of System Section
15	L/$\overline{R}$	O	Data Output Select from DO (H = L ch., L = R ch.)
16	DEF	O	H = DE-EMPHASIS "ON", L = DE-EMPHASIS "OFF"
17	DO	O	16 Bit Data Output
18	WC	O	When Data is Output to DO = H
19	DIGR	O	Signal Output for R ch. Deglitch
20	DIGL	O	Signal Output for L ch. Deglitch
21	ERR	O	H = Parity Error, L = NO ERROR
22	SEL	I(P)	Function Select Signal of S1 and S2
23	S1	O	SEL = L (COPY): S1 = L, S2 = L → NO; S1 = H, S2 = H → YES SEL = H (Sampling frequency): S1 = L, S2 = L → 44.1 kHz; S1 = L, S2 = H → 48 kHz; S1 = H, S2 = H → 32 kHz
24	S2		
25	SCK	O	Clock Signal for Sub Code
26	SSYNC	O	SYNC Signal for Sub Code
27	SDO	O	Sub Code Data Output
28	DIN	I	Data Input

www.manualscenter.com

www.manualscenter.com

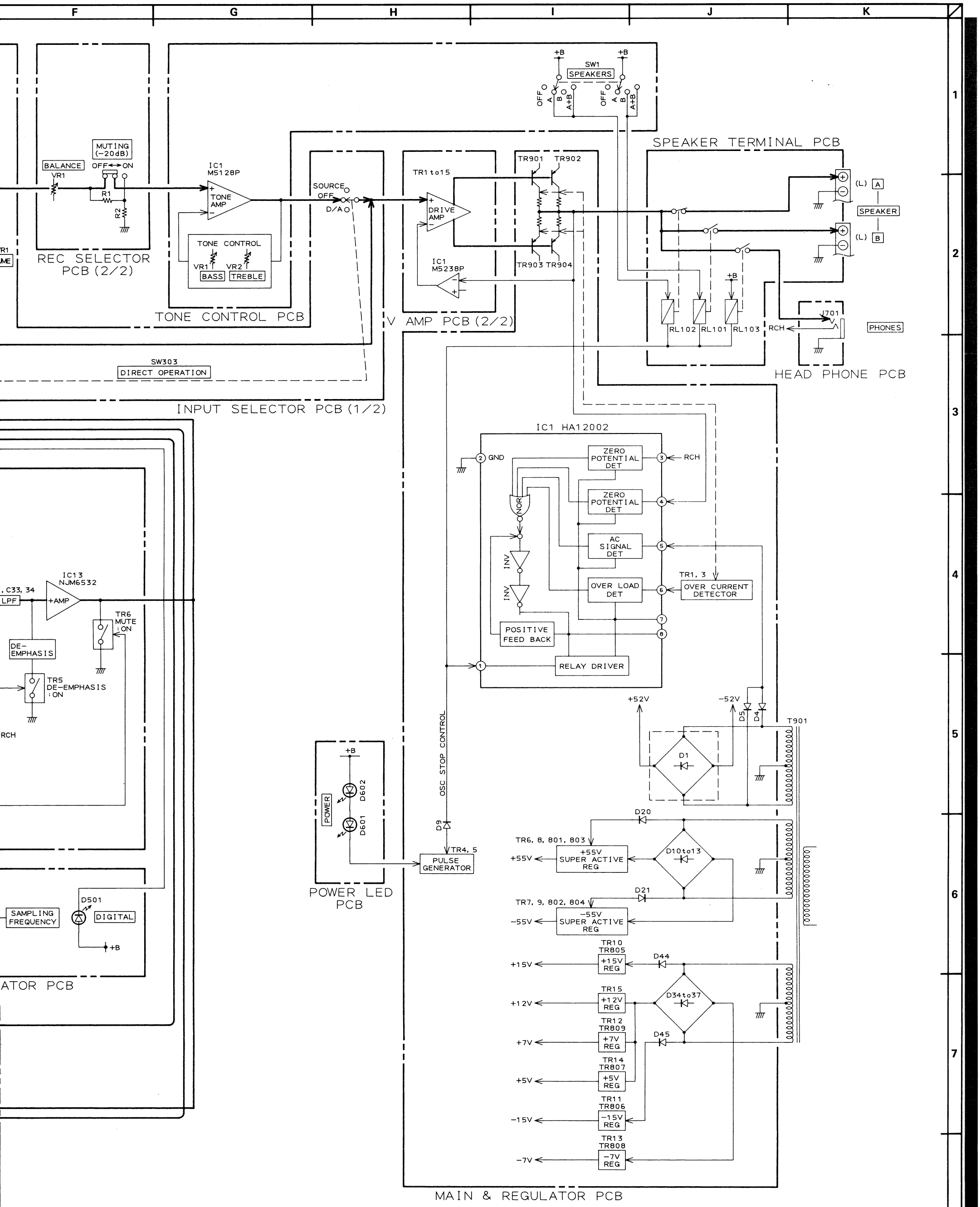

www.manualscenter.com

AM−73
BLOCK DIAGRAM
NO. A205731M

TONE CONTROL PCB
A2057A501B

CONNECTOR (10) PCB
A2057A503J

V AMP PCB (2/2) A2057A504A

EQUALIZER PCB
A2057A504B

DAC PCB
A2057A5020

V AMP PCB (1/2)
A2057A504A

REC SELECTOR PCB
A2057A501C

INPUT SELECTOR PCB
A2057A501A

INDICATOR PCB
A2057A503E

POWER LED PCB
2057A503F

REGULATOR PC
A2057A503H

*A2057A501E CONNECTOR (2) PCB
*A2057A501D CONNECTOR (1) PCB
*A2057A501L CONNECTOR (8) PCB
*A2057A501N CONNECTOR (9) PCB
*A2057A501K CONNECTOR (7) PCB

*A2057A501G CONNECTOR (4) PCB
*A2057A501F CONNECTOR (3) PCB
*A2057A501J CONNECTOR (6) PCB
*A2057A501H CONNECTOR (5) PCB

WARNING: ⚠ AND ▩ INDICATE SAFETY CRITICAL COMPONENTS FOR CONTINUED SAFETY, REPLACE SAFETY CRITICAL COMPONENTS ONLY WITH MANUFACTURER'S RECOMMENDED PARTS
AVERTISSEMENT: ⚠ ET ▩, ILS INDIQUENT LES COMPOSANTS CRITIQUES DE SÉCURITÉ. POUR MAINTENIR LE DEGRÉ DE SÉCURITÉ DE L'APPAREIL, NE REMPLACER QUE DES PIÈCES RECOMMANDEES PAR LE FABRICANT

B (POWER SUPPRY) LINE
MAIN SIGNAL LINE

NOTE
UNLESS OTHERWISE SPECIFIED;
ALL RESISTORS IN OHMS 1/4W (J
ALL CAPACITORS IN μF 25 WV (M)

www.manualscenter.com

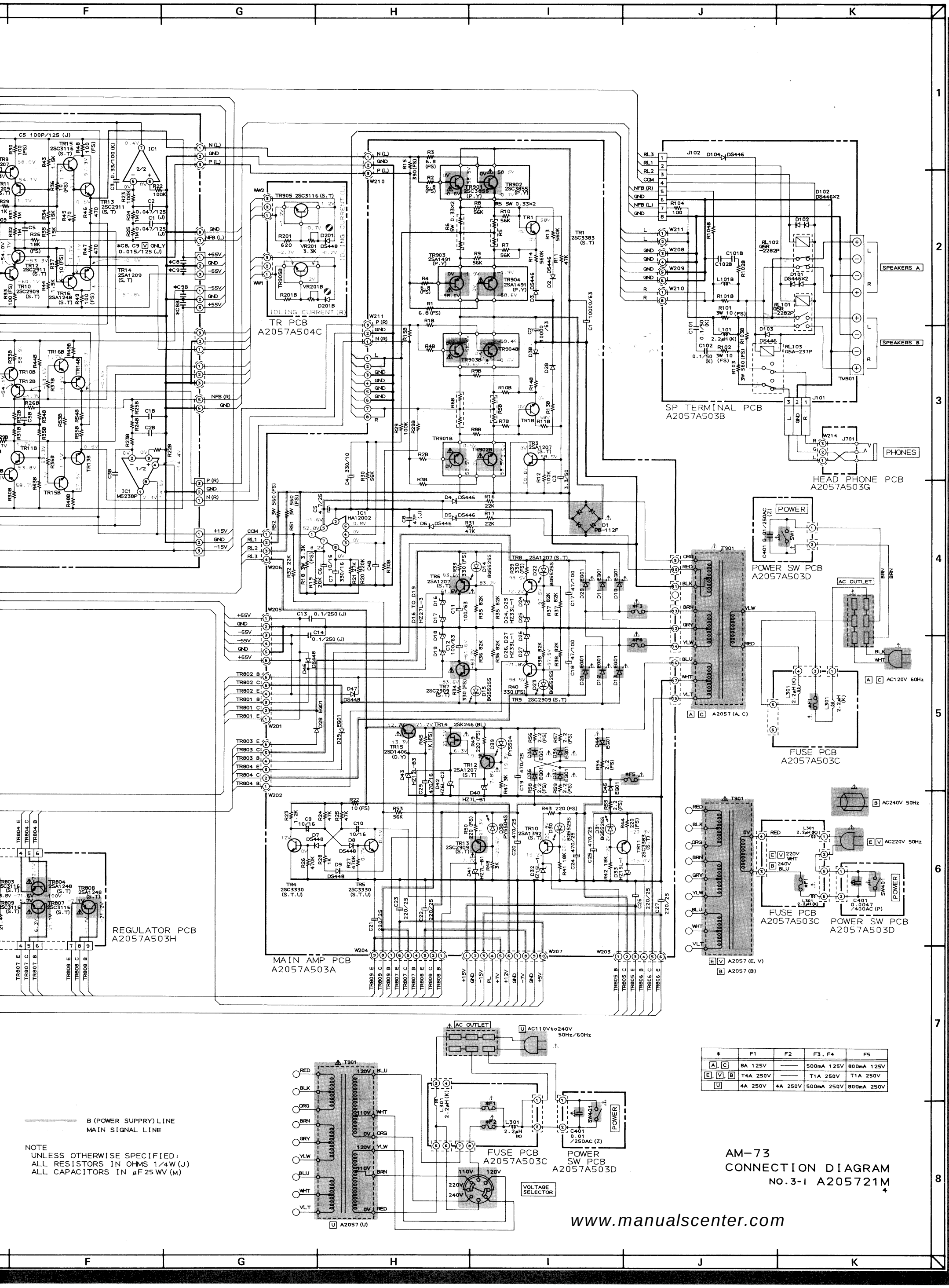

NOTE
UNLESS OTHERWISE SPECIFIED;
ALL RESISTORS IN OHMS 1/4W (J)
ALL CAPACITORS IN μF 25WV (M)

*	F1	F2	F3, F4	F5
A, C	8A 125V	——	500mA 125V	800mA 125V
E, V, B	T4A 250V	——	T1A 250V	T1A 250V
U	4A 250V	4A 250V	500mA 250V	800mA 250V

AM-73
CONNECTION DIAGRAM
NO.3-1 A205721M
4

www.manualscenter.com

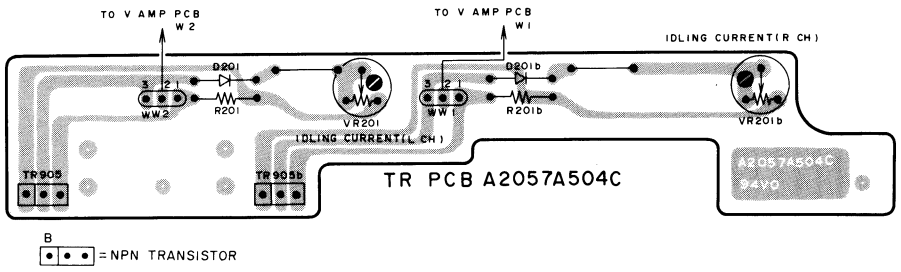

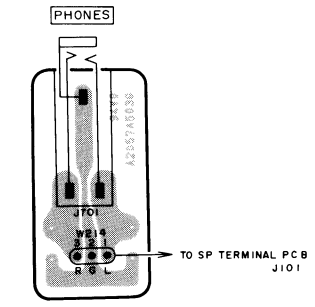

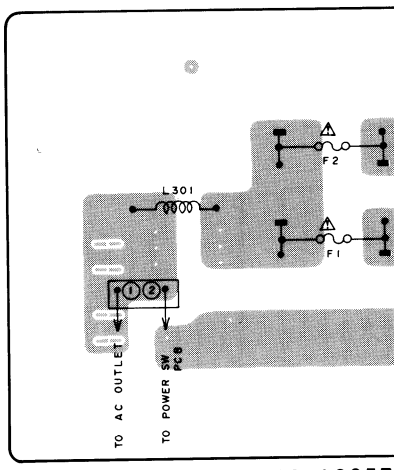

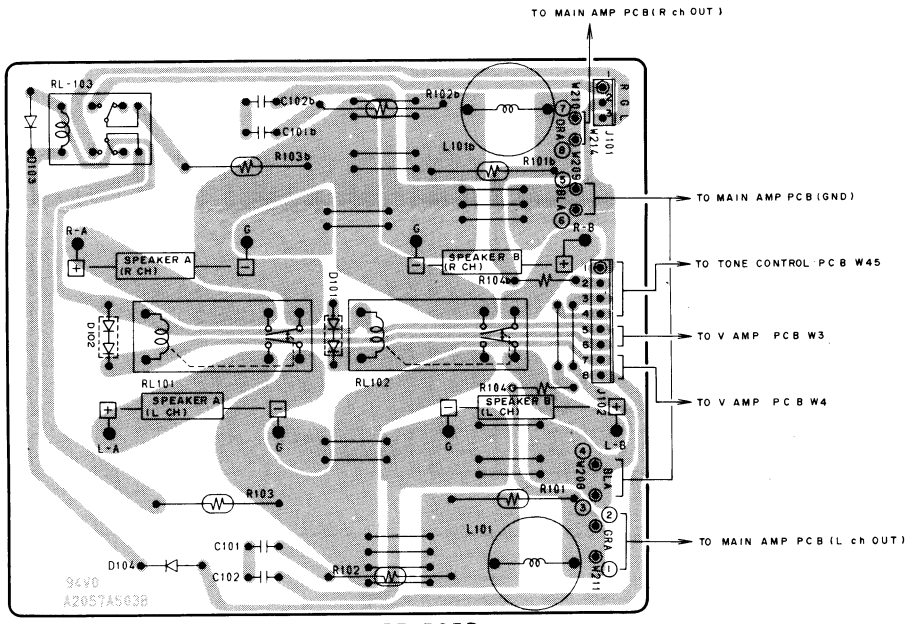

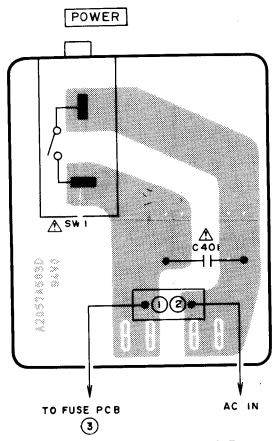

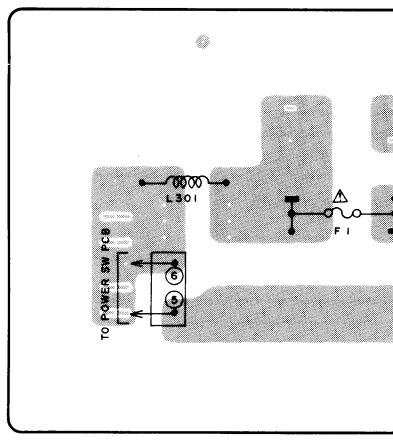

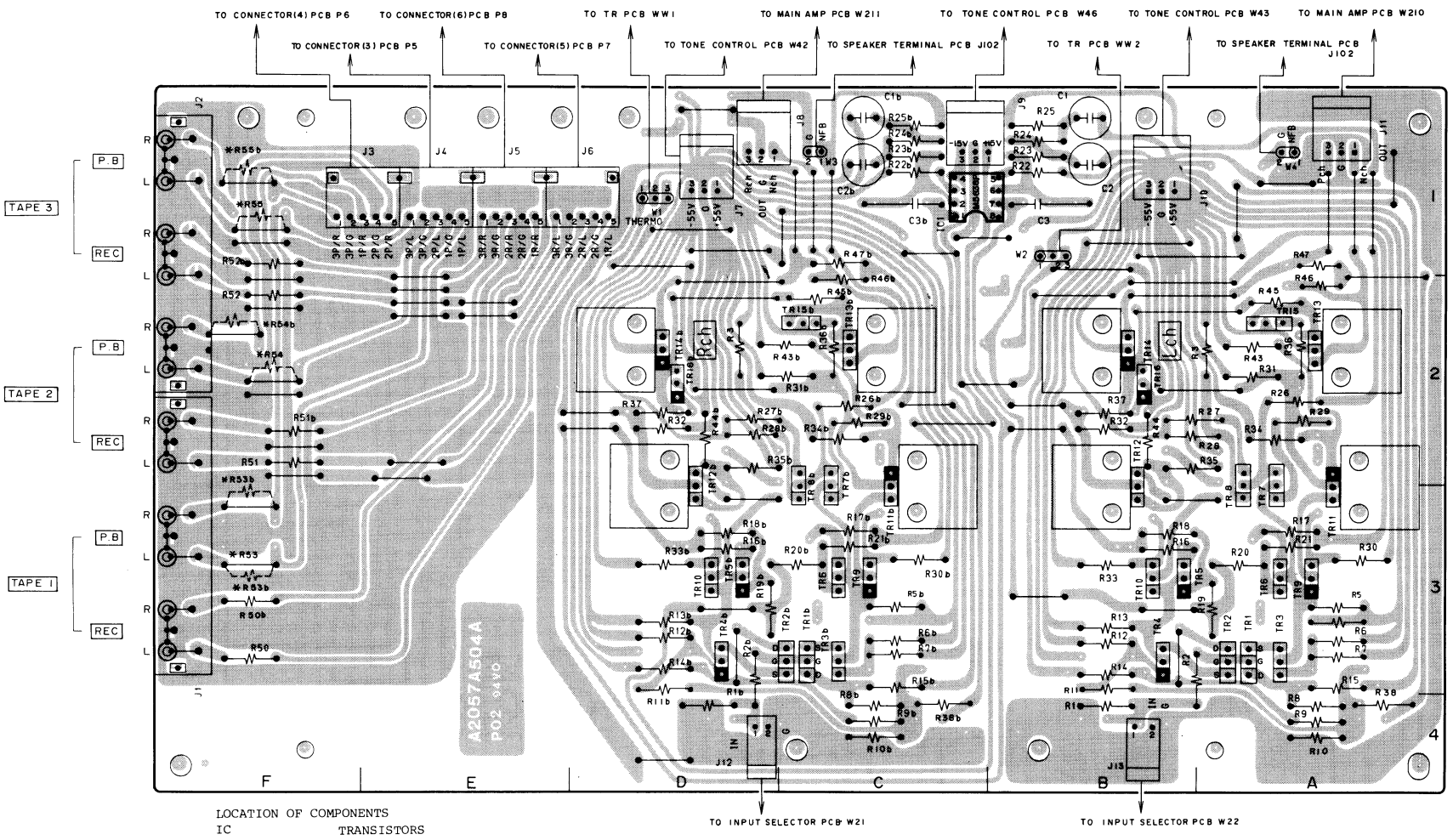

LOCATION OF COMPONENTS

IC	TRANSISTORS		CONNECTORS	
IC1.....C1	TR1.....A3	TR9b.....C3	J1.....F3	
	TR1b.....C3	TR10.....B3	J2.....F1	
	TR2.....A3	TR10b.....D3	J3.....F1	
	TR2b.....C3	TR11.....A3	J4.....E1	
	TR3.....A3	TR11b.....C3	J5.....E1	
	TR3b.....C3	TR12.....B3	J6.....D1	
	TR4.....B3	TR12b.....D3	J7.....D1	
	TR4b.....D3	TR13.....A2	J8.....D1	
	TR5.....B3	TR13b.....C2	J9.....C1	
	TR5b.....D3	TR14.....B2	J11.....B1	
	TR6.....A3	TR14b.....D2	J12.....D4	
	TR6b.....C3	TR15.....A2	J13.....B4	
	TR7.....A3	TR15b.....C2		
	TR7b.....C3	TR16.....B2		
	TR8.....A3	TR16b.....D2		
	TR8b.....C3			
	TR9.....A3			

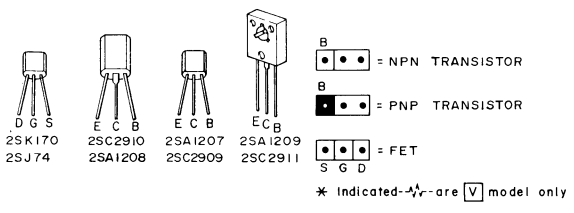

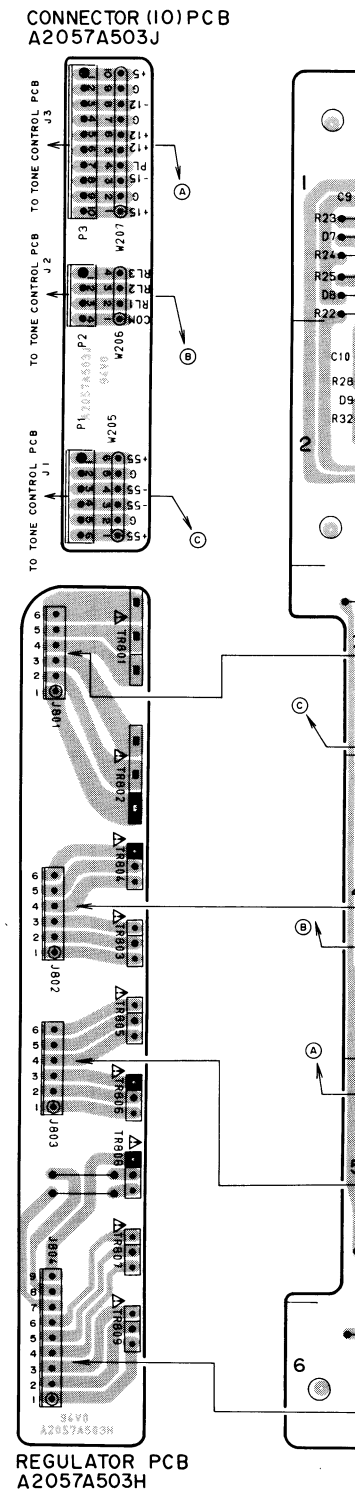

www.manualscenter.com

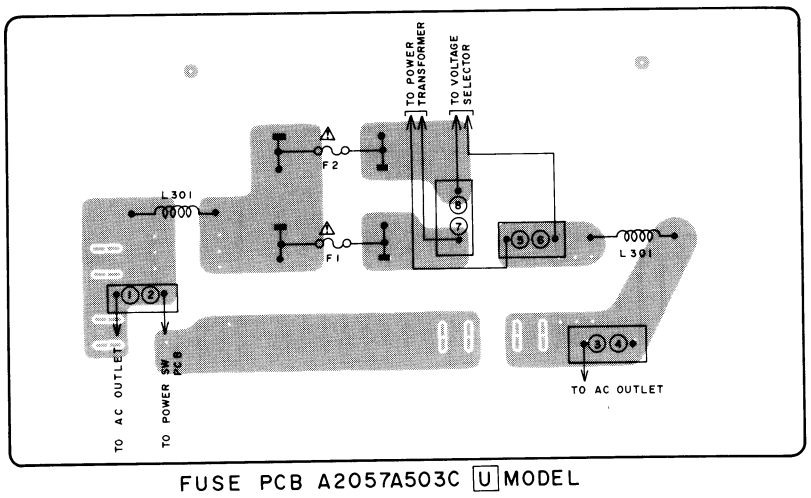

FUSE PCB A2057A503C U MODEL

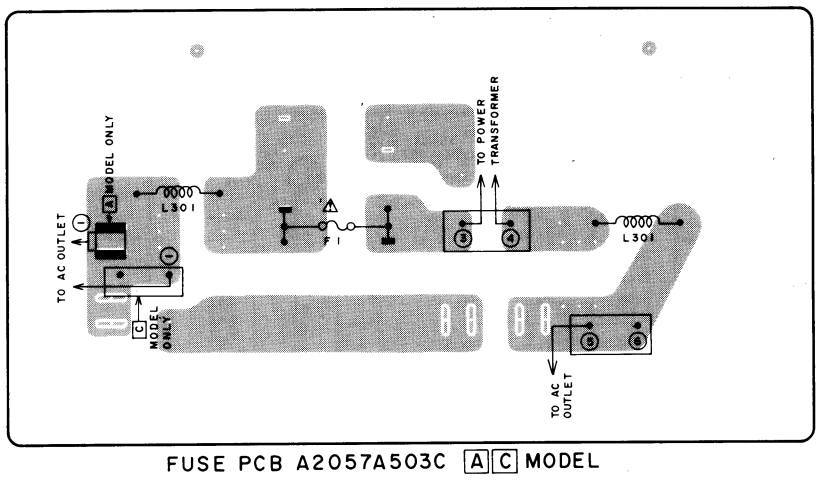

FUSE PCB A2057A503C A C MODEL

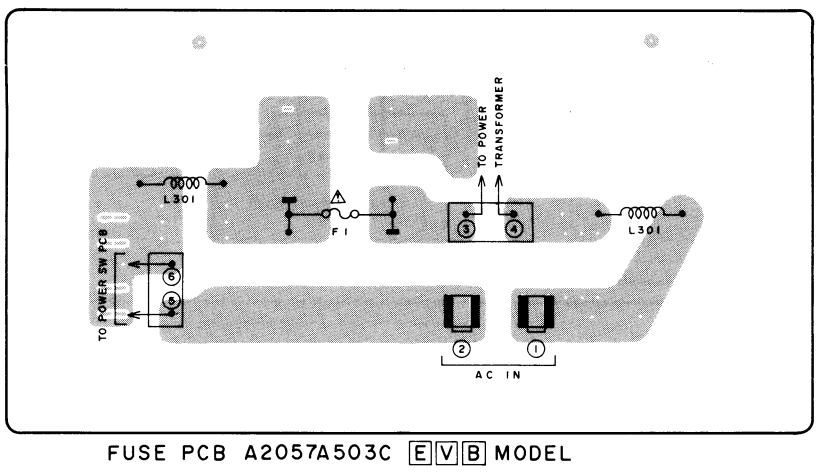

FUSE PCB A2057A503C E V B MODEL

CONNECTOR (10) PCB
A2057A503J

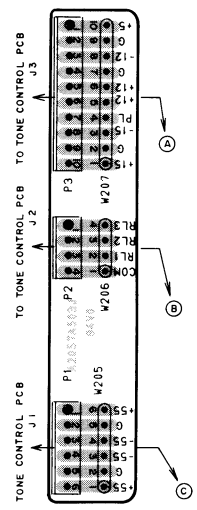

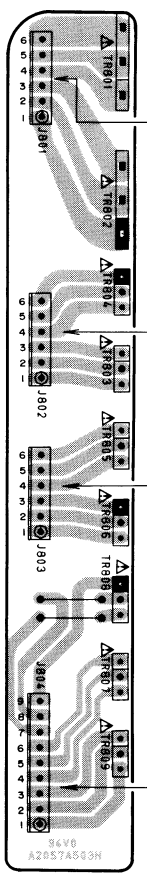

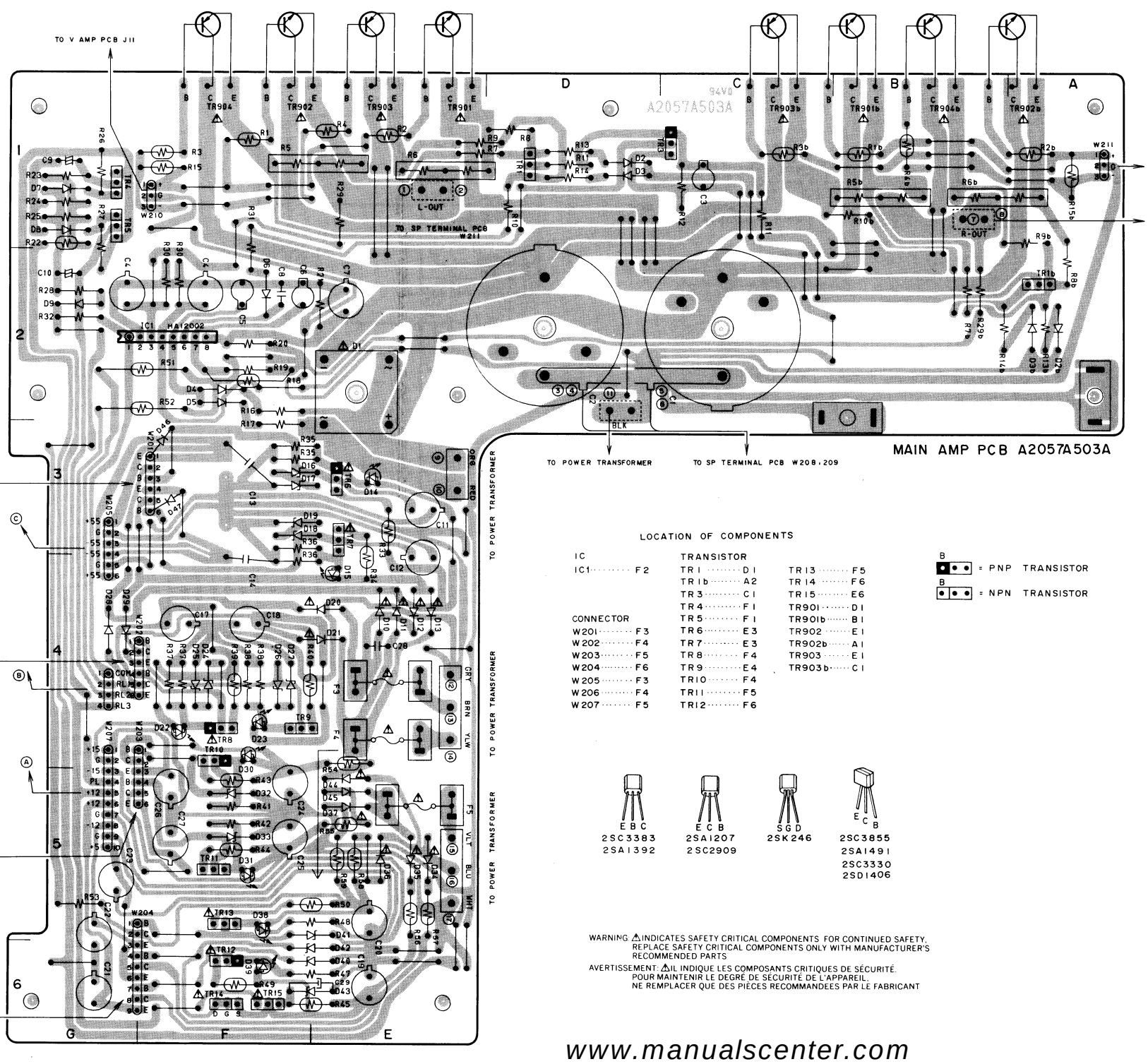

MAIN AMP PCB A2057A503A

REGULATOR PCB
A2057A503H

LOCATION OF COMPONENTS

IC		TRANSISTOR			
IC1	F2	TR1	D1	TR13	F5
		TR1b	A2	TR14	F6
		TR3	C1	TR15	E6
CONNECTOR		TR4	F1	TR901	D1
W201	F3	TR5	F1	TR901b	B1
W202	F4	TR6	E3	TR902	E1
W203	F5	TR7	E3	TR902b	A1
W204	F6	TR8	F4	TR903	E1
W205	F3	TR9	E4	TR903b	C1
W206	F4	TR10	F4		
W207	F5	TR11	F5		
		TR12	F6		

B = PNP TRANSISTOR

B = NPN TRANSISTOR

E B C	E C B	S G D	E C B
2SC3383	2SA1207	2SK246	2SC3855
2SA1392	2SC2909		2SA1491
			2SC3330
			2SD1406

WARNING: ⚠ INDICATES SAFETY CRITICAL COMPONENTS FOR CONTINUED SAFETY.
REPLACE SAFETY CRITICAL COMPONENTS ONLY WITH MANUFACTURER'S RECOMMENDED PARTS

AVERTISSEMENT: ⚠ IL INDIQUE LES COMPOSANTS CRITIQUES DE SÉCURITÉ.
POUR MAINTENIR LE DEGRÉ DE SÉCURITÉ DE L'APPAREIL,
NE REMPLACER QUE DES PIÈCES RECOMMANDEES PAR LE FABRICANT

www.manualscenter.com

www.manualscenter.com

TONE CONTROL PCB
A2057A501B

TO SPEAKER TERMINAL PCB
J102

TO V-AMP PCB (2/2) J9

TO MAIN AMP PCB

CONNNECTOR (10) PCB
A2057A503J

INPUT SELECTOR PCB A2057A501A

TAPE SELECTOR

DIRECT OPERATION

DIGITAL SELECTOR

INDICATOR PCB
A2057A503E

POWER LED PCB
A2057A503F

REC SELECTOR
PCB
A2057A501C

TO V-AMP PCB (2/2)
J7, J10

TO V-AMP PCB (2/2)
J12, J13

B (POWER SUPPLY) LINE
MAIN SIGMAL LINE
REC OUT SIGNAL LINE

NOTE
UNLESS OTHERWISE SPECIFIED;
ALL RESISTORS IN OHMS 1/4W (J)
ALL CAPACITORS IN μF 25WV (M)

AM-73
EQUALIZER&INPUT PCB
SCHEMATIC DIAGRAM
NO.3-2 A205724M
4

www.manualscenter.com

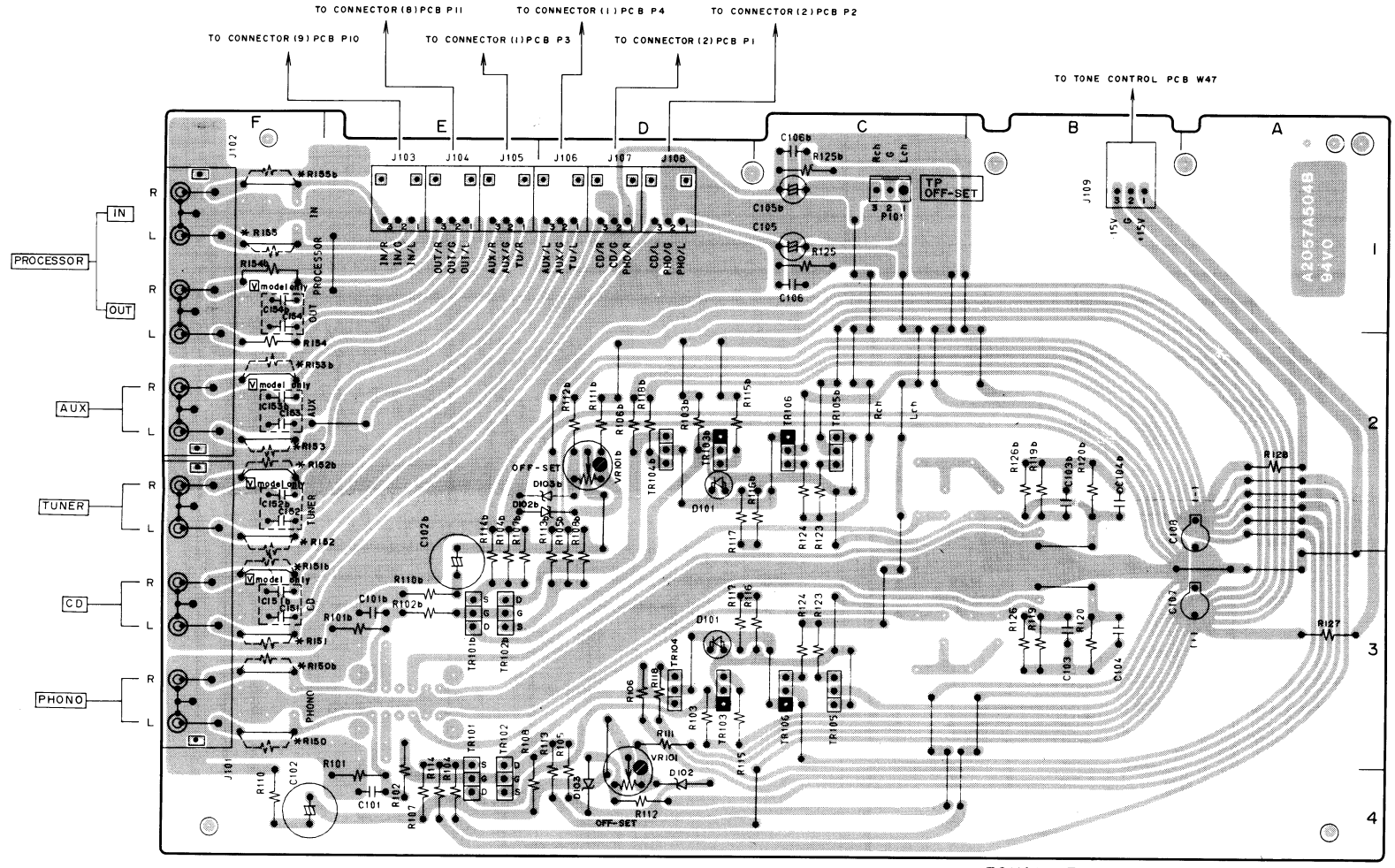

EQUALIZER PCB A2057A504B

B
= NPN TRANSISTOR

B
= PNP TRANSISTOR

= FET
S G D

E B C
2SC3383
2SA1392

D G S
2SK170
2SJ74

✳ Indicated -⁄\/\- are [V] model only

LOCATION OF COMPONENTS

TRANSISTOR

TR101	E4	TR104	D3
TR101b	E3	TR104b	D2
TR102	E4	TR105	C3
TR102b	E3	TR105b	C2
TR103	D3	TR106	C3
TR103b	D2	TR106b	C2

CONNECTOR

J101	F3	J107	D1
J102	F1	J108	D1
J103	E1	J109	B1
J104	E1	P101	C1
J105	E1		
J106	D1		

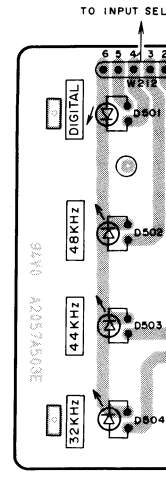

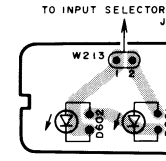

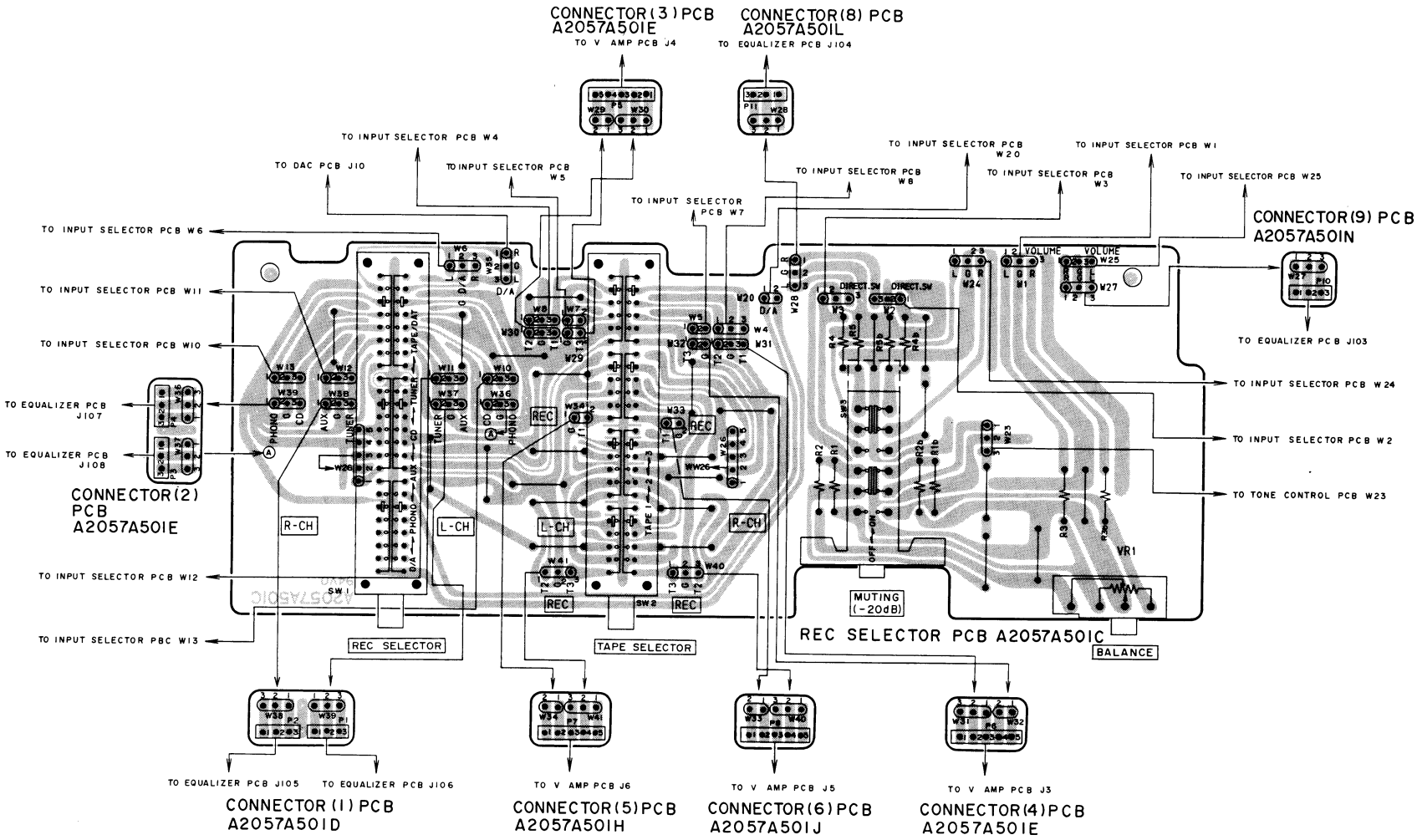

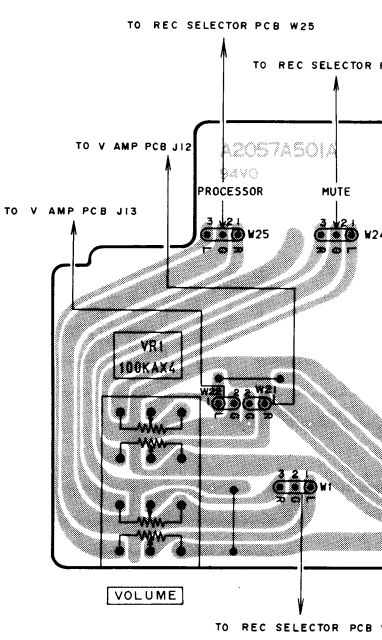

www.manualscenter.com

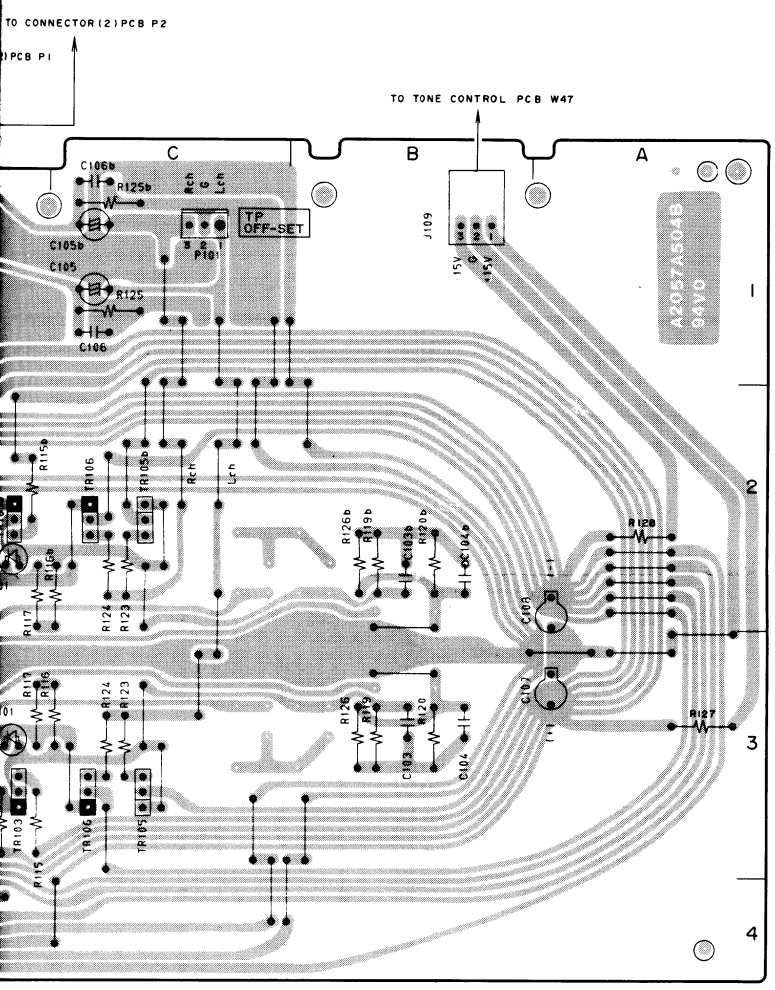

EQUALIZER PCB A2057A504B

N OF COMPONENTS

STOR				CONNECTOR	
·····E4	TR104 ·····D3	J101 ·····F3	J107 ·····D1
·····E3	TR104b·····D2	J102 ·····F1	J108 ·····D1
·····E4	TR105 ·····C3	J103 ·····E1	J109 ·····B1
·····E3	TR105b·····C2	J104 ·····E1	P101 ·····C1
·····D3	TR106 ·····C3	J105 ·····E1	
·····D2	TR106b·····C2	J106 ·····D1	

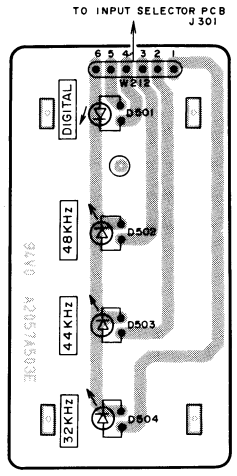

INDICATOR PCB
A2057A503E

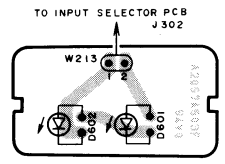

POWER LED PCB
A2057A503F

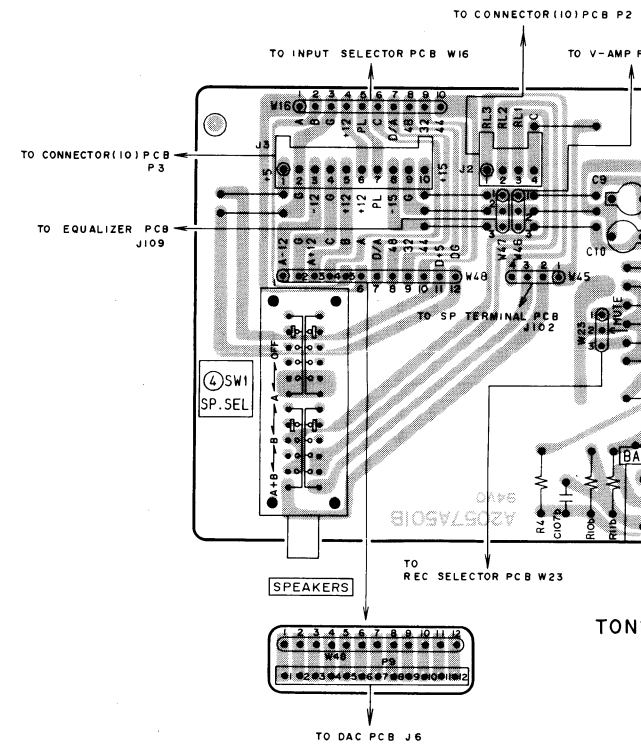

CONNECTOR(7) PCB

TON

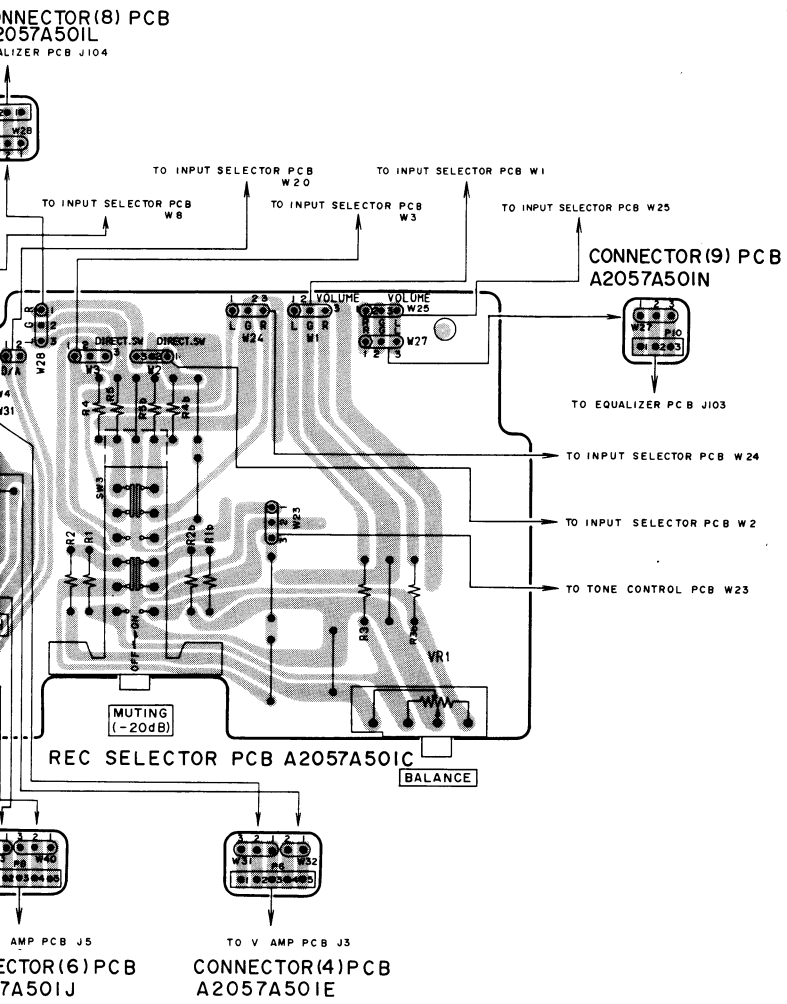

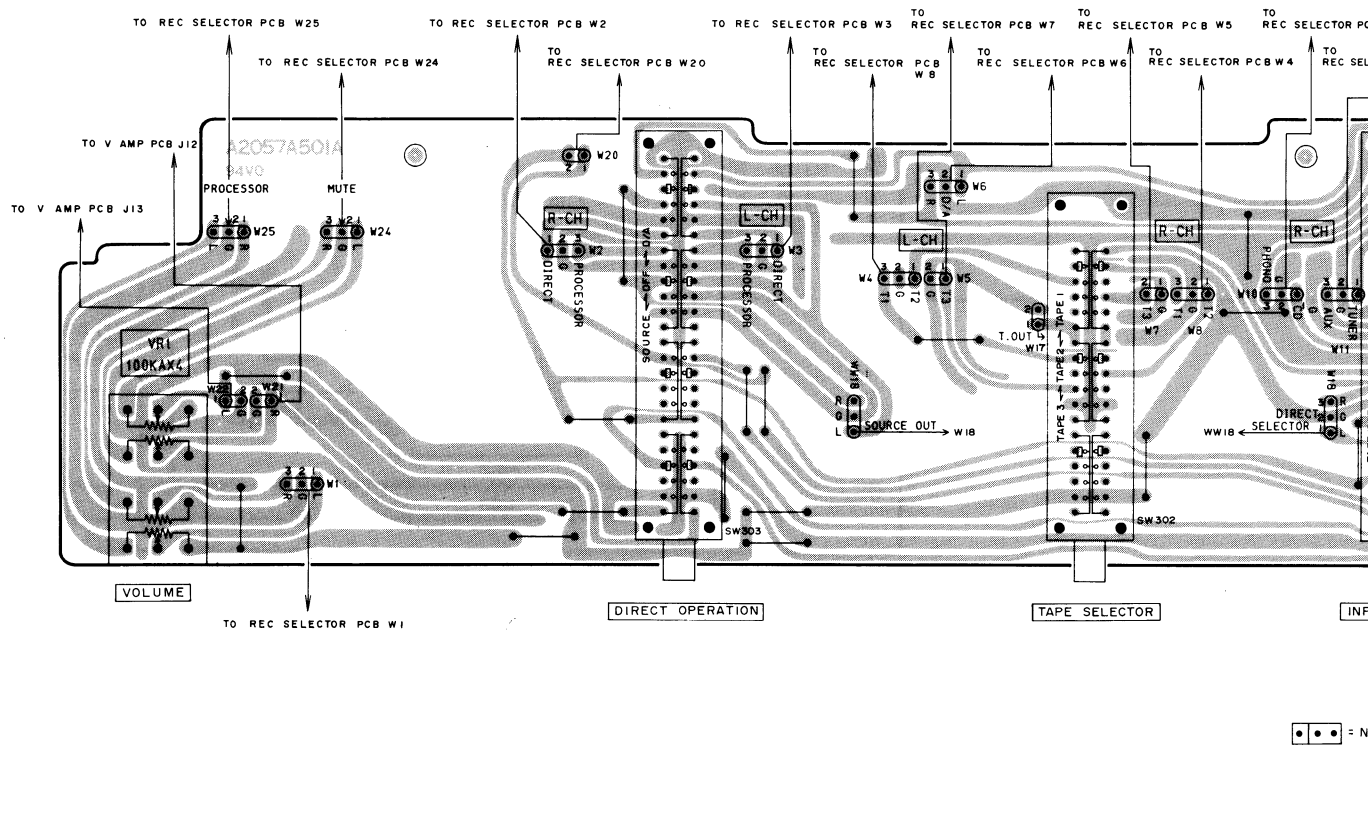

www.manualscenter.com

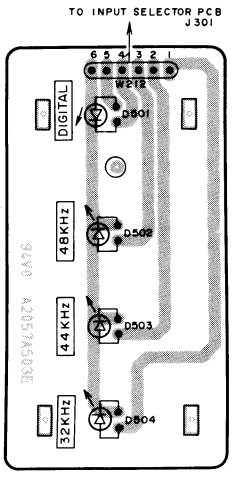

INDICATOR PCB
A2057A503E

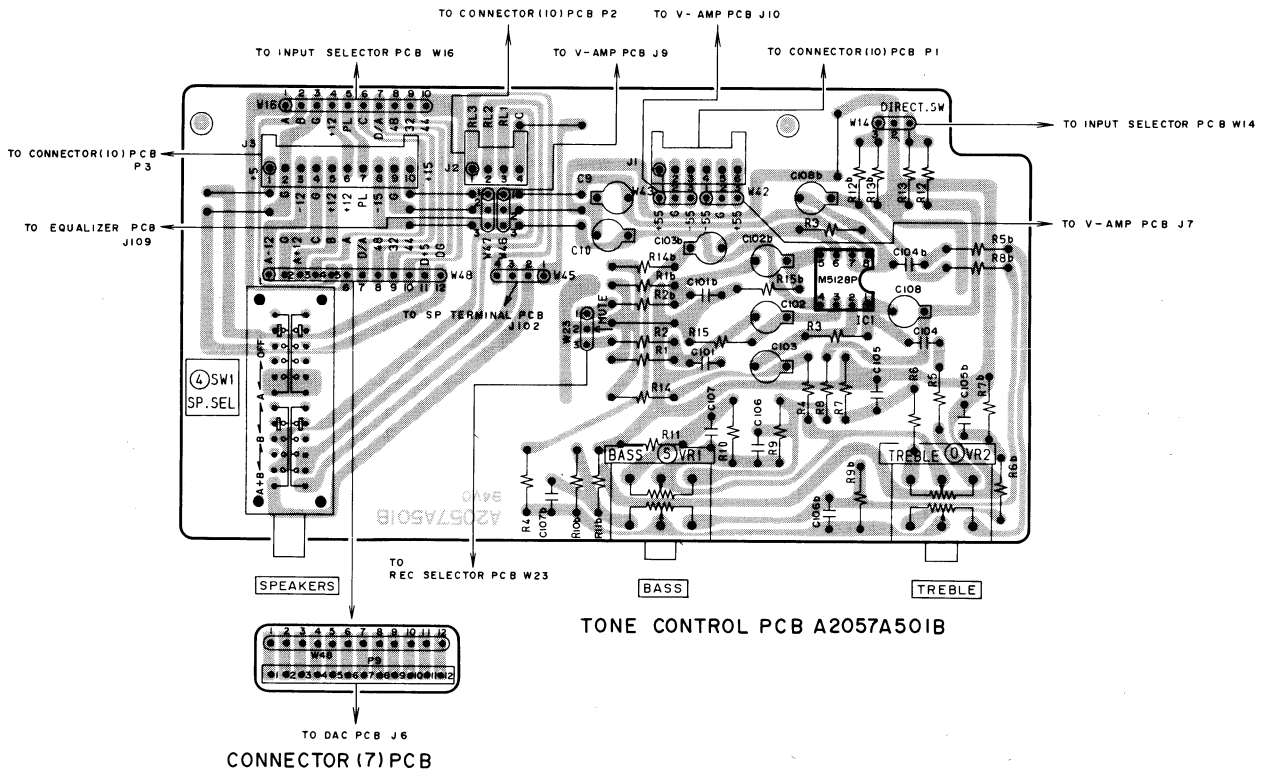

TONE CONTROL PCB A2057A501B

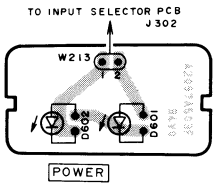

POWER LED PCB
A2057A503F

CONNECTOR (7) PCB

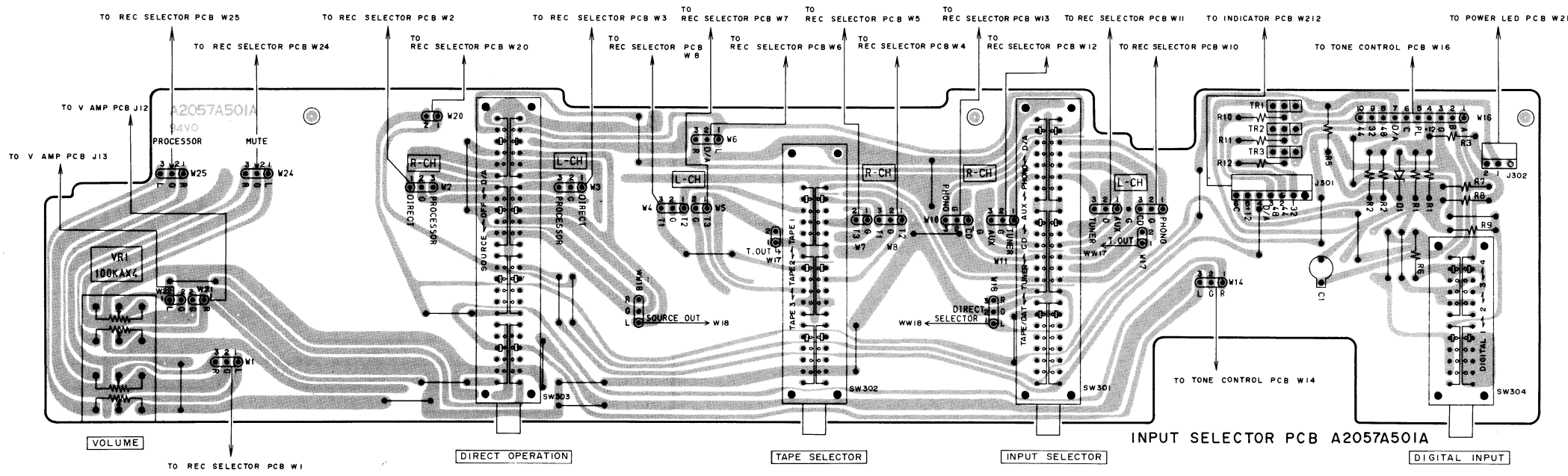

INPUT SELECTOR PCB A2057A501A

= NPN TRANSISTOR

www.manualscenter.com

DAC PCB A2057A5020

B (POWER SUPPLY) LINE
SIGNAL LINE

NOTE
UNLESS OT
ALL RESIS
ALL CAPAC

www.manualscenter.com

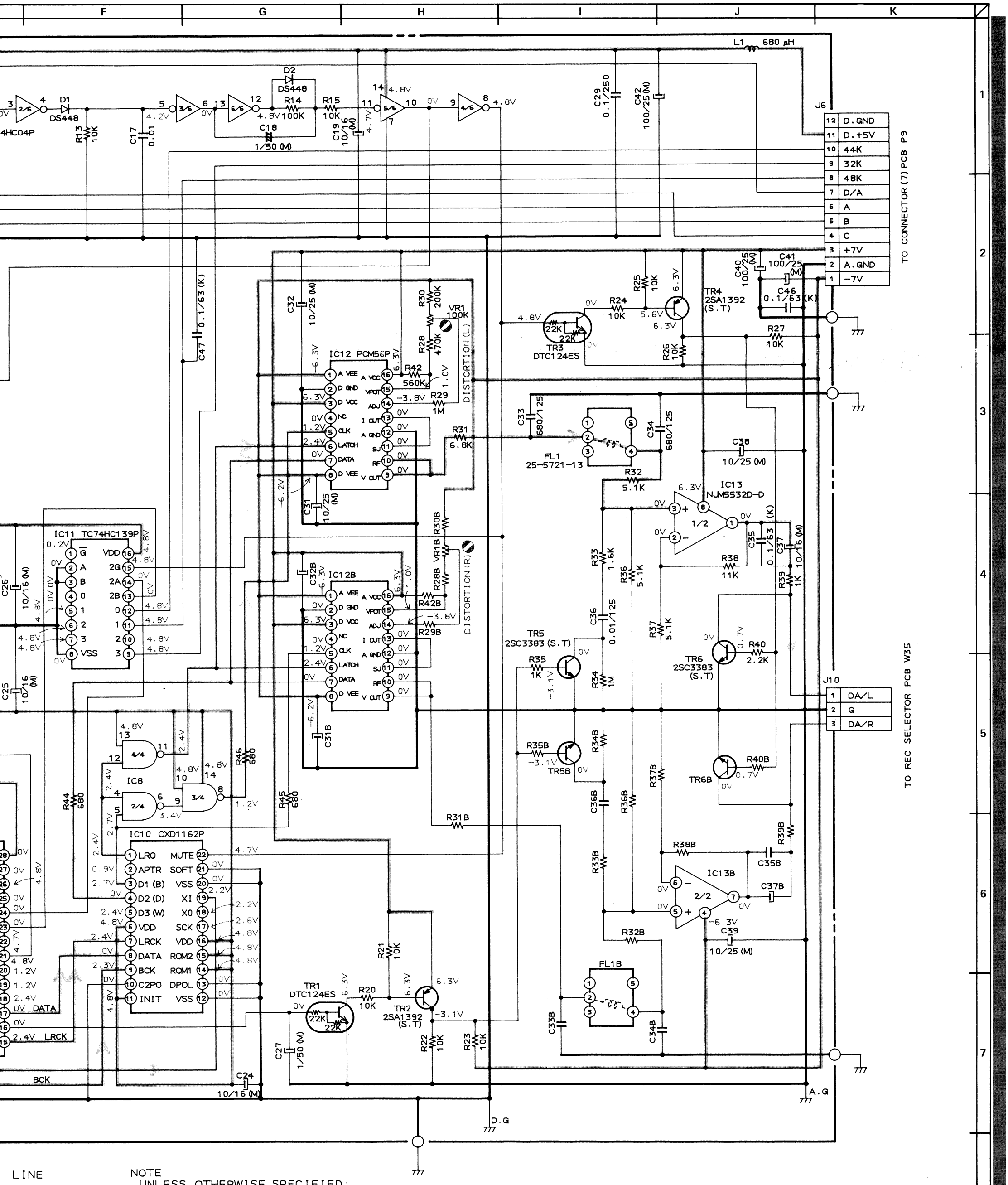

NOTE
UNLESS OTHERWISE SPECIFIED:
ALL RESISTORS IN OHMS 1/4W(J)
ALL CAPACITORS IN µF50WV(J)

www.manualscenter.com

AM−73
DAC PCB
SCHEMATIC DIAGRAM
NO.3-3 A205725M
4

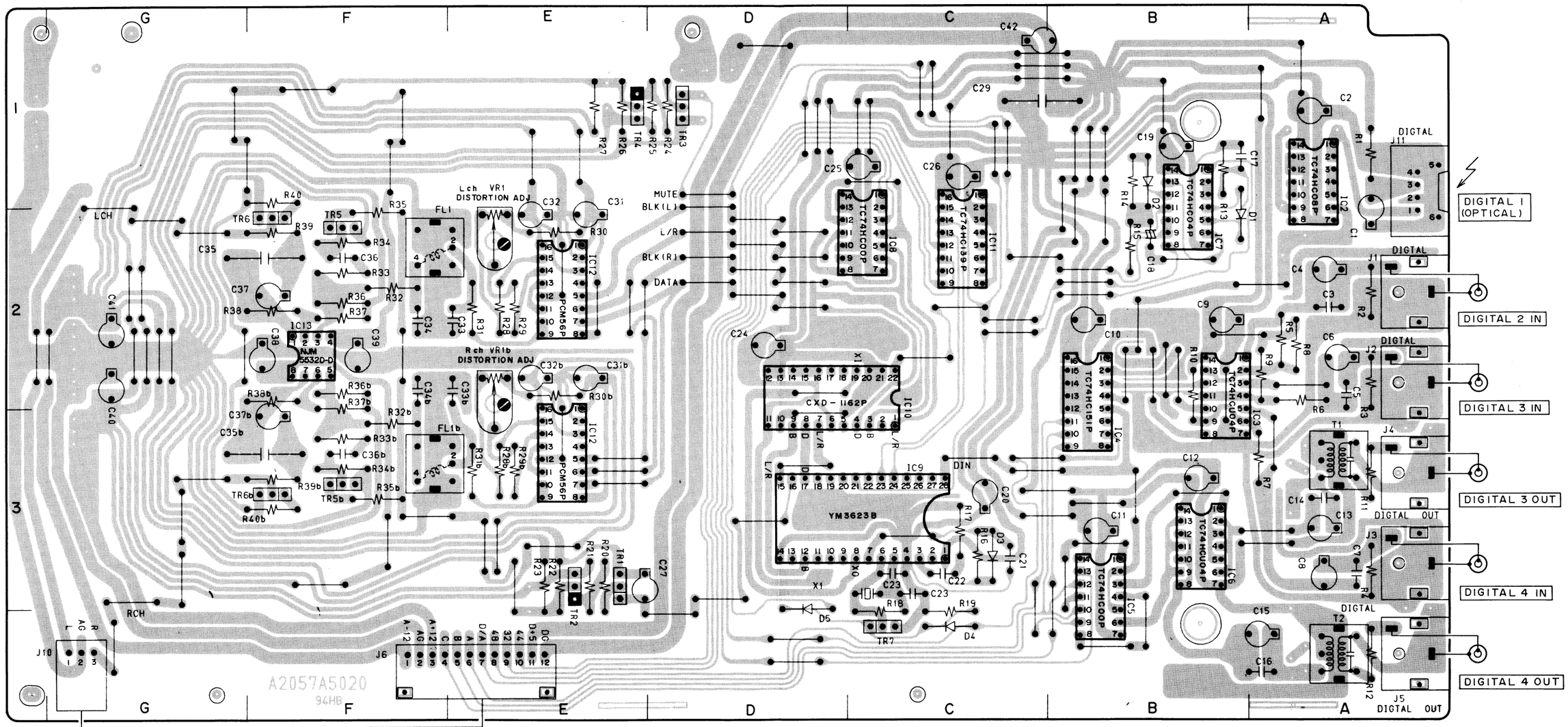

DAC PCB A2057A5020

www.manualscenter.com

LOCATION OF COMPONENTS

IC		TRANSISTOR		CONNECTOR	
IC2	A1	TR1	E3	J6	E4
IC3	B2	TR2	E3	J10	G4
IC4	B2	TR3	D1		
IC5	B3	TR4	E1		
IC6	B3	TR5	F2		
IC7	B2	TR5b	F3		
IC8	C2	TR6	F2		
IC9	C3	TR6b	F3		
IC10	D2	TR7	C4		
IC11	C2				
IC12	E2				
IC12b	E3				
IC13	F2				

B = PNP TRANSISTOR

B = NPN TRANSISTOR

E B C
2SC3383
2SA1392

B C E
DTC124ES
DTC143ES