Clarion

Clarion Co., Ltd.
5-35-2, Hakusan, Bunkyouku, Tokyo, 112-8608 Japan
Service Dept. 50 kamitoda, Toda-shi, Saitama, 335-8511 Japan Tel: 048-443-1111 FAX:048-433-6996

Published by Service Dept.
298-5944-00 Nov.2001 P
Printed in Japan

Service Manual

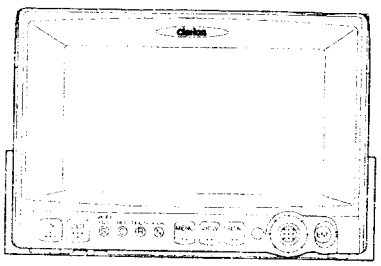

DIN-Size Navigation System Built-in Monitor

Model **NVS613**
(QX-4010E)

SPECIFICATION

Main section

Rated voltage:	DC14.0V(10.8~15.6V) Negative ground
Current consumption:	2A Max.
Fuse capacity:	backup 5 A
External dimensions:	178(W)×50(H)×195(D)(mm)
Weight:	2.0kg

Navigation section

Reception frequencies:	1575.42 MHz C/A codes
Sensitivity:	−130dBm
Channels:	8 parallel channels
Voice synthesis:	4-bit ADPCM sampling frequency 11.025kHz
Speaker output:	0.8W min. (Maximum output for 8Ω load)

Monitor section

Screen size(mm):	5.8-inch wide 127.2(W)x71.8(H)
Display method:	Transmission type TN LCD
Drive method:	TFT active matrix driving
Pixels:	280,800pixels(1,200Hx234V)

GPS antenna

Type:	Micro strip planar antenna
External dimensions:	34(W)×13(H)×38(D)(mm)
Weight:	95g(including cord)

※ Specifications and design are subject to change without notice for further improvement.

COMPONENTS

QX-4010E-A

Navigation unit	------	1
Extension lead	854-6370-05	1
Fuse(5A)	120-0050-00	1
GPS antenna	096-0139-00	1
Parts bag	------	1
Electro tap	060-0018-00	2
Electro tap	060-0305-00	1
Clamp	321-1026-00	8
Waterproof rubber	345-7473-00	1
Double sided tape	347-6369-00	1
Flat head bolt	714-5006-41	4
Double sems bolt(M5x8)	716-0496-01	4

NOTE

※ We cannot supply PWB with component parts in principle. When a circuit on PWB has failure, please repair it by component parts base. Parts which are not mentioned in service manual are not supplied.

※ Prevent damage caused by static electricity when repairing the pick-up.
The pattern of the pick-up is short-circuiting for prevention.
Remove the soldering with a solder iron whose insulation resistance is larger than 10MΩ(DC500V) after complete connection to the main PWB
For repair table shall use copper or conductive sheet (with impedance is lower than 1GΩ)such as a sheet.
Be sure to put on a wrist-strap for prevent electric static's.(with impedance lower than 100MΩ) The strap works to drain away the static electricity build-up on the human body.
And as static electricity build-up on clothes is not drained away, be careful and not your clothes to touch the pick-up.
Position of short soldering for pick-up protection position is different by model.
Some units have two short soldering points.
Always short LD circuit to open the short circuit and removes by soldering iron.

■ To engineers in charge of repair or inspection of our products.

Before repair or inspection, make sure to follow the instructions so that customers and Engineers in charge of repair or inspection can avoid suffering any risk or injury.

1. Use specified parts.
   The system uses parts with special safety features against fire and voltage. Use only parts with equivalent characteristics when replacing them.
   The use of unspecified parts shall be regarded as remodeling for which we shall not be liable. The onus of product liability (PL) shall not be our responsibility in cases where an accident or failure is as a result of unspecified parts being used.
2. Place the parts and wiring back in their original positions after replacement or re-wiring.
   For proper circuit construction, use of insulation tubes, bonding, gaps to PWB, etc, is involved. The wiring connection and routing to the PWB are specially planned using clamps to keep away from heated and high voltage parts. Ensure that they are placed back in their original positions after repair or inspection.
   If extended damage is caused due to negligence during repair, the legal responsibility shall be with the repairing company.
3. Check for safety after repair.
   Check that the screws, parts and wires are put back securely in their original position after repair. Ensure for safety reasons there is no possibility of secondary ploblems around the repaired spots.
   If extended damage is caused due to negligence of repair, the legal responsibility shall be with the repairing company.
4. Caution in removal and making wiring connection to the parts for the automobile.
   Disconnect the battery terminal after turning the ignition key off. If wrong wiring connections are made with the battery connected, a short circuit and/or fire may occur.
   If extensive damage is caused due to negligence of repair, the legal responsibility shall be with the repairing company.
5. Cautions regarding chips.
   Do not reuse removed chips even when no abnormality is observed in their appearance. Always replace them with new ones. (The chip parts include resistors, capacitors, diodes, transistors, etc). The negative pole of tantalum capacitors is highly susceptible to heat, so use special care when replacing them and check the operation afterwards.
6. Cautions in handling flexible PWB
   Before working with a soldering iron, make sure that the iron tip temperature is around 270℃. Take care not to apply the iron tip repeatedly(more than three times)to the same patterns. Also take care not to apply the tip with force.
7. Turn the unit OFF during disassembly and parts replacement. Recheck all work before you apply power to the unit.
8. Cautions in checking that the optical pickup lights up.
   The laser is focused on the disc reflection surface through the lens of the optical pickup. When checking that the laser optical diode lights up, keep your eyes more than 30cms away from the lens. Prolonged viewing of the laser within 30cms may damage your eyesight.
9. Cautions in handling the optical pickup
   The laser diode of the optical pickup can be damaged by electrostatic charge caused by your clothes and body. Make sure to avoid electrostatic charges on your clothes or body, or discharge static electricity before handling the optical pickup.

9-1. Laser diode
   The laser diode terminals are shorted for transportation in order to prevent electrostatic damage. After replacement, open the shorted circuit. When removing the pickup from the mechanism, short the terminals by soldering them to prevent this damage.

9-2. Actuator
   The actuator has a powerful magnetic circuit. If a magnetic material is put close to it. Its characteristics will change. Ensure that no foreign substances enter through the ventilation slots in the cover.

9-3. Cleaning the lens
   Dust on the optical lens affects performance. To clean the lens, apply a small amount of isopropyl alcohol to lens paper and wipe the lens gently.

■ CAUTIONS

This appliance contains a laser system and is classified as a "CLASS 1 LASER PRODUCT". To use this model properly, read this Owner's Manual carefully and keep this manual for your future reference. In case of any trouble with this player, please contact your nearest "AUTHORIZED service station". To prevent direct exposure to the laser beam, do not to open the enclosure.

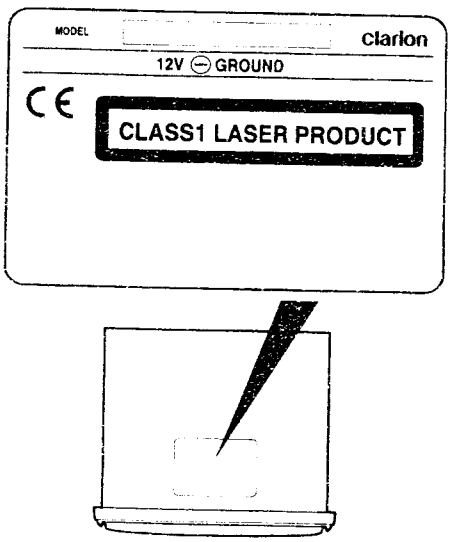

Top view of NAVI-UNIT

BLOCK DIAGRAM

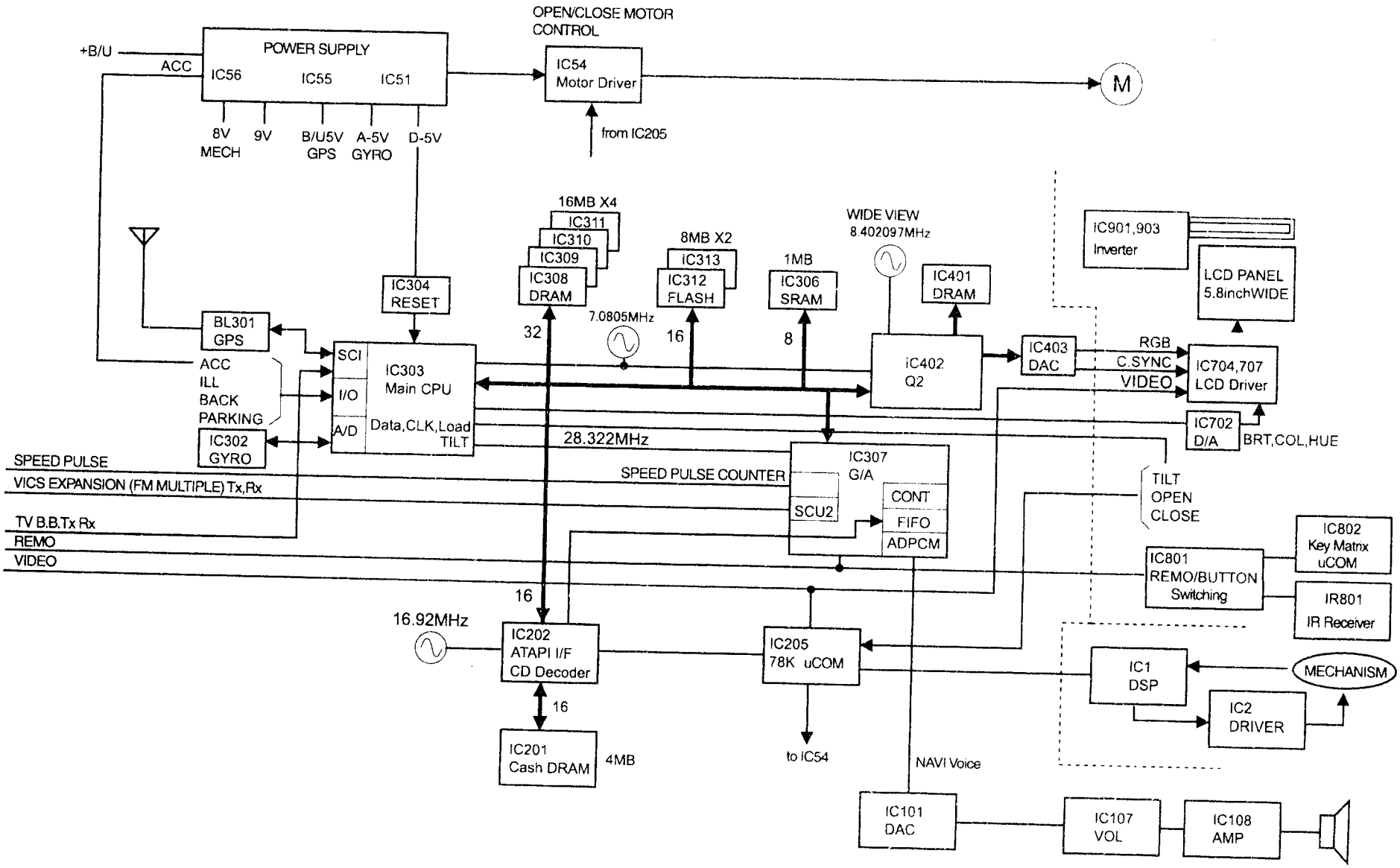

■SELF-DIAGNOSTIC FUNCTION

Item	Screen Display	Operation	Remarks
Start-up		Connect pins No.3 and No.8 in Extension Terminal No.1 with a lead wire or something similar, and turn on power.	
Menu	TEST MODE 1. GPS INITIAL 2. MEMORY TEST 3. CD TEST 4. SOUND TEST 5. SERIAL TEST 6. GPS TEST 7. GRAPHIC TEST 8. KEY TEST 9. LCD TEST A. SENSOR TEST B. CD READ TEST	Use the Menu and Return keys to select a test item from the menu. Menu key: Move down the list Return key: Move up the list When the desired item has been selected, press the Current position key to display the relevant test information or values.	
GPS Settings	1. GPS INITIAL SET LAT 3722 SET LON 14023 SET DATA 98070112 PUSH OK	Moving the joystick left and right will move the red bar; the current date and time can be changed by moving it up and down. The Current position key can be pressed to allow latitude and longitude values to be adjusted in the same way.	LAT: Latitude LON: Longitude DATA: Year/Month/Day/ Time(hour) (Two digit value for each)
Memory Test	2. MEMORY TEST ROM 4E3B SRAM OK DRAM OK VRAM OK FLASH OK CSTM FLASH/SRAM CLR	Press the Current position key to perform an automatic check of ROM, SRAM, DRAM, VRAM, and FLASH memory in that order. (A certain amount of time is required for the DRAM test.) ※ When memory is to be erased, press the RPT+ key several times to change CSTM to NOW on the screen. The erase will have been performed successfully when the display disappears.	Although "NG" will be displayed whenever an error has been identified, any display for ROM other than "4E3B" is considered as being erroneous. Caution: The power must not be turned off while the Memory Test is being performed. Caution: When memory is erased, all information such as record lists will be cleared.
CD Test	3. CD TEST CD READ1 → NVG CD AUDIO → CD READ2 → CD CHECK → ENT (DONT CONNECT MECHA)	Press Current position key.	"CD CHECK" will show "READ OK" Caution: The Execute key must not be pressed when in the CD Test screen.
Sound Test	4. SOUND TEST S MUTE	Use the Current position key to modify the sound volume. The Execute key activates the Mute function.	↓ S (Low volume) ↓ M (Medium volume) ↓ L (Hight volume)
Serial Test	5. SERIAL TEST RETURN CHK GPS – EXT1 OK TV NG EXT1 DTR H TV REQ L	Successive pressing of the Current position key changes EXT1,DTR, and TV REQ to "H" in that order. GPS: Not tested EXT1: Display shows "OK" when pins No.6 and No.7 on the J501 connector are connected. TV: Display shows "OK" when pins No.4 and No.5 on the J502 connector are connected.	Checks are each of the serial data-transfer lines. Use the Jig to check of EXT1,DTR TV REQ.

Item	Screen Display	Operation	Remarks
GPS Test	6. GPS TEST LAT 01036B00 LON 03720600 HGT 0032 SPE 0000 DIR 0000 DAT 980701120000 STATUS DGPS NON 10 ST01 SEARCH ST19 SEARCH ST06 SEARCH ST1E SEARCH ST16 SEARCH ST1D SEARCH ST05 SEARCH ST17 CSF		The GPS receiving condition is displayed. LAT: Latitude LON: Longitude HGT: Height SPE: Speed DIR: Direction DAT: Date STATUS (reception condition) NON: Not positioning SRH: Positioning 2D: 2D positioning 3D: 3D positioning DGPS 10: Non-DGPS positioning 11: DGPS positioning ↓ ST1 to ST8 (Satellite Data) SEARCH:Searching RCV: Receiving AVL: Available for positioning USE: Using for positioning CSF: CSF
Graphic Test	7. GRAPHIC TEST	Use the Current position key to display the five individual Graphic Test screens.	
			The display changes from white to black in 17 individual steps.
	R G B C M Y		The colors white, red, green, blue, Cyan, Magenta and yellow are displayed.
			Full black screen.
			Full white screen.

Item	Screen Display	Operation	Remarks
			This screen is for a reserve.
key Test.	8. KEY TEST	The position is painted on the screen, when each operation key is pushed.	
LCD Test	9. LCD TEST → BRI = 1D COL = 1D HUE = 1D DIM = 00 WID = FULL	Moving the Joystick up and down will select the item and setting can be changed by moving it right and left. BRI/COL/HUE can change to 3 stages by the Zoom key. When the RPT+ key is pushed setting can be returned to initial.	BRI: Brightness COL: Color HUE: Hue DIM: Dimer WID: Wide FULL ← ↓ SINM ↓ NORM ↓ WID1
Sensor Test	A. SENSOR TEST GYRO 2.510V ECC (D) 0 0000Hz BRAKE OFF ILL OFF ACC ON BACK OFF		GYRO When the vehicle is stationary, a value in the region of 2.500 V will be displayed. This value will move up or down whenever the direction of the navigator unit is changed. ※ When the value changes, the color of the figures will also change as follows: Up to 2.0 V: Blue From 2.0 V to 3.0 V: White ECC(D) or ECC(A) When a pulse is being sent to the speed sensor, its value is displayed here. BRAKE This will read "ON" when the parking brake is dropped to GND. ILL This will read "ON" when 12 V is being supplied to the illumination. ACC This will read "OFF" when Accessory is turned off. Power will turn off approximately a few seconds later. BACK This will read "ON" when 12 V is being supplied to Back.
CD read test	B. CD READ TEST	Playback of the MUSIC CD checked by Current position key.	

■ERROR MESSAGES

Symptom	Cause	Solution
CD-ROM disc error	The disc is scratched, dirty or loaded upside down.	Take out the CD-ROM,check it, and insert it correctly.
	CD-ROM function error The display map data could not be read.	Alternatively, turn the vehicle ignition key to OFF, wait about 5 seconds, then restart the engine.
The memory was erased. Restart the engine.	Map, destination, point registration,route, or track data could not be read.	Alternatively, turn the vehicle ignition key to OFF, wait about 5 seconds, then restart the engine. In this case, the data may be erased.

■ADJUSTMENT

※ Refer to the adjustment point on page21(LCD PWB).

LCD Power supply section

1. DC-DC Converter section Voltage adjustment.

1-1Adjust TP701 to 5.3±0.02V by VR701.

1-2Confirm TP702 = 7.5±0.5V.

1-3Confirm TP703 = 13.0±0.5V.

1-4Confirm TP704 = -16.0±0.5V.

LCD Controller section

1. PLL Adjustment

1-1Short TP716 to GND and check TP714 within 2.65±0.1V.

1-2On the above condition, adjust TP717 to 15.734KHz±50Hz by VR708.

2. Screen position adjustment

2-1Input NTSC standard video signals and adjust the pulse width of TP717 (HSY) to 4.6±0.1μ sec by VR709(HPOS).

3. Controller voltage confirmation (Connector J702)

3-1VGH(32P) = 13.0±0.5V

3-2VCC(31P) = −11.0±0.5V

3-3VGL(25P) = −10.2±0.5V

(Confirm COM signal 7.86kHz)

3-4VSH(11P) = 5.3±0.2V

Video section

1. Video signal adjustment

Input linear(10 steps),monochrome,APL50% Wave-like(1.0Vp-p) (NTSC standard signal) to VIDEO INPUT. (Set D/A to initial position,RGBON=0V)

1-1BRT Voltage confirmation

Confirm TP710 = 2.00±0.10V.

1-2 γ0(GAM0) Voltage confirmation

Confirm TP708 = 1.95±0.

1-3 γ2(GAM2) Voltage confirmation

Confirm TP709 = 2.15±0.10V.

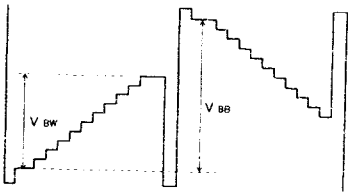

1-4Mnonitor TP706(VG) with a synchroscope and adjust VBB to 4.0±0.05V by VR706(RGB AMP),VBW to 3.8±0.05V with VR702 (CONT).

1-5Monitor TP705(VR) with a synchroscope and adjust VBB to 4.0±0.05V by VR704(BRT R).

1-6Monitor TP707(VB) with a synchroscope and adjust VBB to 4.0±0.05V by VR705(BRT B).

1-7Monitor TP713 (VCOMAC) with a synchroscope and adjust amplitude to 8.0±0.1Vp-p by VR703(COM AMP).

RGB section(Connector J701)

1. RGB Screen confirmation

1-1Set RGBON='H'(5V) and input a signal of 0.7Vp-p to R, G, B, CSYNC terminal and confirm if each R, G, B is shown.

Inverter section

1. Fluorescence Display power supply confirmation

1-1Set FL-on='H' and confirm if the output to FL+B(J702) is 13.2V.

1-2Confirm if FLDIM(J702) become 0V or Confirm if the back light goes dim at the night mode. (setting by D/A)

PANEL ASSY section

1. VCOM DC bias adjustment

Adjust VR707(VCOM DC) to the best contrast position.(using an Illuminanometer)

■EXPLANATION OF IC

052-3518-00 MBM29F800BA-70PN Flash Memory

1.Terminal Description

pin 1: A 13 :IN: The address input.
pin 2: A 14 :IN: The address input.
pin 3: A 15 :IN: The address input.
pin 4: A 12 :IN: The address input.
pin 5: A 11 :IN: The address input.
pin 6: A 10 :IN: The address input.
pin 7: A 9 :IN: The address input.
pin 8: A 8 :IN: The address input.
pin 9: NU : - : Not in use.
pin 10: WE_ :IN: Wright enable signal input terminal.
pin 11: RESET_ :IN: Reset signal input.
pin 12: VCC : - : Positive supply voltage.
pin 13: DQ 4 :I/O: The data input / output.
pin 14: DQ 12 :I/O: The data input / output.
pin 15: DQ 5 :I/O: The data input / output.
pin 16: DQ 13 :I/O: The data input / output.
pin 17: DQ 6 :I/O: The data input / output.
pin 18: DQ 14 :I/O: The data input / output.
pin 19: DQ 7 :I/O: The data input / output.
pin 20: A 16 :IN: The address input.
pin 21: BYTE_ :IN: The data length selection(8bit/16bit).
pin 22: VSS : - : Negative supply voltage.
pin 23: DQ 15/A-1 :I/O: The data input/output, The address input.

pin 24: OE_ : IN : Output enable signal input.
pin 25: VSS : - : Negative supply voltage.
pin 26: CE_ : IN : Chip enable signal input.
pin 27: A 0 : IN : The address input.
pin 28: DQ 0 : I/O: The data input / output.
pin 29: DQ 8 : I/O: The data input / output.
pin 30: DQ 1 : I/O: The data input / output.
pin 31: DQ 9 : I/O: The data input / output.
pin 32: DQ 2 : I/O: The data input / output.
pin 33: DQ 10 : I/O: The data input / output.
pin 34: DQ 3 : I/O: The data input / output.
pin 35: DQ 11 : I/O: The data input / output.
pin 36: NU : - : Not in use
pin 37: BY_/RY : O : Ready/Busy
pin 38: A 18 : IN : The address input.
pin 39: A 17 : IN : The address input.
pin 40: A 7 : IN : The address input.
pin 41: A 6 : IN : The address input.
pin 42: A 5 : IN : The address input.
pin 43: A 4 : IN : The address input.
pin 44: A 1 : IN : The address input.
pin 45: A 2 : IN : The address input.
pin 46: A 3 : IN : The address input.

052-3519-10 HD6437043AF49F SH-2 CORE RISC CPU

1.Terminal Description

pin 1: PA 23 : - : Not in use.
pin 2: DA CK 0 : O : Strobe of DMA request to Q2.
pin 3: AUDIO_/BEEP : O : Output selection, "L"= Audio, "H"= Beep
pin 4: CAS HH_ : O : The column address strobe to the DRAM.
pin 5: DA CK 1 : O : Strobe of DMA request to CD decoder
pin 6: VSS : - : Negative supply voltage.
pin 7: A 0 : O : The address output to the external DRAM.
pin 8: A 1 : O : The address output.
pin 9: A 2 : O : The address output.
pin 10: A 3 : O : The address output.
pin 11: A 4 : O : The address output.
pin 12: VCC : - : Positive supply voltage.
pin 13: A 5 : O : The address output.
pin 14: VSS : - : Negative supply voltage.
pin 15: A 6 : O : The address output.
pin 16: A 7 : O : The address output to the external DRAM.
pin 17: A 8 : O : The address output.
pin 18: A 9 : O : The address output.
pin 19: A 10 : O : The address output.
pin 20: A 11 : O : The address output.
pin 21: A 12 : O : The address output.
pin 22: A 13 : O : The address output.
pin 23: A 14 : O : The address output.
pin 24: A 15 : O : The address output.
pin 25: A 16 : O : The address output.
pin 26: VCC : - : Positive supply voltage.
pin 27: A 17 : O : The address output.
pin 28: VSS : - : Negative supply voltage.
pin 29: CAS HL_ : O : The column address strobe to the DRAM.
pin 30: P OFF : O : Power off command output.
pin 31: RAS_ : O : The row address strobe output to the DRAM.
pin 32: CAS LL_ : O : The column address strobe to the DRAM.
pin 33: PA 18 : - : Not in use.
pin 34: CAS LH_ : O : The column address strobe to the DRAM.
pin 35: VSS : - : Negative supply voltage.
pin 36: DWR_ : O : Write strobe for the DRAM.
pin 37: A 18 : O : The address output.
pin 38: A 19 : O : The address output.
pin 39: A 20 : O : The address output.
pin 40: VCC : - : Positive supply voltage.
pin 41: A 21 : O : The address output.
pin 42: VSS : - : Negative supply voltage.
pin 43: READ_ : O : Read command output.
pin 44: WDT OVF_ : O : Over flow of WDT.
pin 45: D 31 : I/O: The data input / output.
pin 46: D 30 : I/O: The data input / output.
pin 47: WR LH_ : O : Upper bits selection command output.
pin 48: WR LL_ : O : Lower bits selection command output.
pin 49: CS 1_ : O : Chip selection signal output to the external register and ROM.
pin 50: CS 0_ : O : Not in use.
pin 51: IRQ 3_ : IN : Interrupt request.
pin 52: IRQ 2_ : IN : Interrupt request.
pin 53: CS 3_ : O : Chip selection signal output to the external register and ROM.
pin 54: CS 2_ : O : Chip selection signal output to the external register and ROM.
pin 55: VSS : - : Negative supply voltage.
pin 56: D 29 : I/O: The data input / output.
pin 57: D 28 : I/O: The data input / output.
pin 58: D 27 : I/O: The data input / output.
pin 59: D 26 : I/O: The data input / output.
pin 60: D 25 : I/O: The data input / output.
pin 61: GND : - : Ground.
pin 62: D 24 : I/O: The data input / output.
pin 63: VCC : - : Positive supply voltage.
pin 64: D 23 : I/O: The data input / output.
pin 65: D 22 : I/O: The data input / output.
pin 66: D 21 : I/O: The data input / output.
pin 67: D 20 : I/O: The data input / output.
pin 68: D 19 : I/O: The data input / output.
pin 69: D 18 : I/O: The data input / output.
pin 70: D 17 : I/O: The data input / output.
pin 71: VSS : - : Negative supply voltage.
pin 72: D 16 : I/O: The data input / output.
pin 73: D 15 : I/O: The data input / output.
pin 74: D 14 : I/O: The data input / output.
pin 75: D 13 : I/O: The data input / output.
pin 76: D 12 : I/O: The data input / output.
pin 77: VCC : - : Positive supply voltage.
pin 78: D 11 : I/O: The data input / output.
pin 79: VSS : - : Negative supply voltage.
pin 80: D 10 : I/O: The data input / output.
pin 81: D 9 : I/O: The data input / output.
pin 82: D 8 : I/O: The data input / output.
pin 83: D 7 : I/O: The data input / output.
pin 84: D 6 : I/O: The data input / output.
pin 85: VCC : - : Positive supply voltage.
pin 86: D 5 : I/O: The data input / output.
pin 87: VSS : - : Negative supply voltage.
pin 88: D 4 : I/O: The data input / output.
pin 89: D 3 : I/O: The data input / output.
pin 90: D 2 : I/O: The data input / output.
pin 91: D 1 : I/O: The data input / output.
pin 92: D 0 : I/O: The data input / output.
pin 93: VSS : - : Negative supply voltage.
pin 94: XTAL : - : Not in use.
pin 95: MD 3 : IN : Fix to "H".
pin 96: E XTAL : IN : Crystal connection.
pin 97: MD 2 : IN : Fix to "L".
pin 98: NMI : IN : Not in use.
pin 99: VCC : - : Positive supply voltage.
pin100: PA 16 : IN : Self diagnosis.
pin101: WAIT_ : IN : Wait interrupt.
pin102: MD 1 : IN : Fix to "H".
pin103: MD 0 : IN : Fix to "L".
pin104: PLL VCC : - : PLL power supply.
pin105: PLL CAP : - : Capacitor connection for PLL.
pin106: PLL VSS : - : PLL ground.
pin107: CK : O : Clock pulse.
pin108: RES_ : IN : Reset signal.
pin109: D REQ 0_ : IN : DMA request for Q2.
pin110: PE 1 : O : Fluorescence pipe ON signal output.
pin111: D REQ 1_ : IN : DMA request for CD decoder.
pin112: VCC : - : Positive supply voltage.
pin113: PE 3 : O : Not in use.
pin114: TIOCIA : IN : The data input from the remote controller.

pin115: MUTELINE : O : Not in use.
pin116: MUTE AMP : O : Amplifier Mute signal output.
pin117: VSS : - : Negative supply voltage.
pin118: AN 0 : IN : Gyroscope signal input.
pin119: AN 1 : IN : Not in use.
pin120: K0 SLEEP : IN : CD micro computer status flag intput. "H" = Stop.
pin121: BACK_ : IN : Back gear signal input from the car.
pin122: ACC MONI : IN : ACC monitor.
pin123: ILLUMI_ : IN : Illumination ON signal.
pin124: A VSS : - : Analog ground.
pin125: PARKING_ : IN : Parking brake signal input.
pin126: FLASH RY/BY : O : Ready/Busy signal output to the flash memory.
pin127: A Vref : IN : Reference voltage for ADC.
pin128: A VCC : - : Positive supply voltage for the internal analog section.
pin129: VSS : - : Negative supply voltage.
pin130: RX D 0 : IN : GPS serial data input.
pin131: TX D 0 : O : GPS serial data output.
pin132: IRQ 0_ : IN : Interrupt request.
pin133: RX D 1 : IN : Serial data input.
pin134: TX D 1 : O : Serial data output.
pin135: VCC : - : Positive supply voltage.
pin136: IRQ 1_ : IN : Interrupt request.
pin137: VOL 1 : IN : Volume control input. Refer Table 1.
pin138: VOL 2 : IN : Volume control input. Refer Table 1.
pin139: DTR : O : Universal output terminal.
pin140: O SP CNT : O : Not in use.
pin141: VSS : - : Negative supply voltage.
pin142: D Clock : O : BRI,COL,HUE setting signal output for the LCD.
pin143: D Data : O : BRI,COL,HUE setting signal output for the LCD.
pin144: D Load : O : BRI,COL,HUE setting signal output for the LCD.

Table 1. Volume control input

Volume	VOL1(pin137)	VOL2(pin138)
Large	L	L
Midiam	L	H
Small	H	H

052-5030-00 uPD78014GC-A32-AB8 CD Mechanism Controlier

1.Terminal Description

pin 1: CHU SW : IN : CD disc chucking signal input.
pin 2: CLOSE SW : IN : LCD panel closed flag = "L".
pin 3: OPEN SW : IN : LCD panel opened flag = "L".
pin 4: NU : - : Not in use.
pin 5: MOT IN 1 : O : LCD panel loading motor control. Refer Table 1.
pin 6: MOT IN 2 : O : LCD panel loading motor control. Refer Table 1.
pin 7: MOT ON : O : LCD panel loading motor ON signal output.
pin 8: ACC MONI : IN : ACC monitor.
pin 9: VSS : - : Negative supply voltage.
pin 10: D 0 : I/O: The data input / output.
pin 11: D 1 : I/O: The data input / output.
pin 12: D 2 : I/O: The data input / output.
pin 13: D 3 : I/O: The data input / output.
pin 14: D 4 : I/O: The data input / output.
pin 15: D 5 : I/O: The data input / output.
pin 16: D 6 : I/O: The data input / output.
pin 17: D 7 : I/O: The data input / output.
pin 18: SU A 0 : O : The address output.
pin 19: SU A 1 : O : The address output.
pin 20: SU A 2 : O : The address output.
pin 21: SU A 3 : O : The address output.
pin 22: SU A 4 : O : The address output.
pin 23: SU A 5 : O : The address output.
pin 24: VSS : - : Negative supply voltage.
pin 25: SU A 6 : O : The address output.
pin 26: NU : - : Not in use.
pin 27: NU : - : Not in use.
pin 28: NU : - : Not in use.
pin 29: NU : - : Not in use.
pin 30: K0 SLEEP : IN : Micro computer status flag output. "H" = Stop.
pin 31: READ_ : O : Read command output.
pin 32: WRITE_ : O : Write command output.
pin 33: WAIT_ : IN : Wait interrupt.
pin 34: NU : - : Not in use.
pin 35: RESET_ : IN : Reset signal input.
pin 36: SB SYNC : IN : Sub code sync.
pin 37: Z INT 1 : IN : The interrupt signal input from ATAPI.
pin 38: Z INT : IN : The decode-end interrupt signal input.
pin 39: TILT SW : IN : LCD panel tilt switch input. "L" = Horizontal.
pin 40: VDD : - : Positive supply voltage.
pin 41: X 2 : - : Crystal connection.
pin 42: X 1 : - : Crystal connection.
pin 43: VSS : - : Negative supply voltage.
pin 44: NU : - : Not in use.
pin 45: NU : - : Not in use.
pin 46: VSS : - : Negative supply voltage.
pin 47: NU : - : Not in use.
pin 48: NU : - : Not in use.
pin 49: NU : - : Not in use.
pin 50: NU : - : Not in use.
pin 51: TR B : IN : Photo sensor signal input from the CD mechanism. Without the disk = "L".
pin 52: MUTE : O : Muting signal output.
pin 53: TP : IN : Test terminal.
pin 54: FL ON : O : The fluorescent light of the LCD ON signal output.
pin 55: VDD : - : Positive supply voltage.
pin 56: VSS : - : Negative supply voltage.
pin 57: BUS 0 : I/O: CD IC Data input / output.
pin 58: BUS 1 : I/O: CD IC Data input / output.
pin 59: BUS 2 : I/O: CD IC Data input / output.
pin 60: BUS 3 : I/O: CD IC Data input / output.
pin 61: BUC CLOCK : O : CD IC clock pulse output.
pin 62: CCE : O : Chip enable signal output to CD IC.
pin 63: CD RESET : O : Reset signal output to the CD mechanism controller.
pin 64: TR A : IN : Photo sensor signal input from the CD mechanism. 8cm-Disk = "L", 12cm-Disk = "H".

Table 1. LCD panel loading motor control

	Stop	Close	Open	Blake
MOT IN 1 (pin 5)	L	H	L	H
MOT IN 2 (pin 6)	L	L	H	H

052-7038-08 uPD6604GS-113-GJG-E2 Remote controller

1.Terminal Description

pin 1: KO 6 : O : Not in use.
pin 2: LMP : O : LMP output.
pin 3: SO : O : Not in use.
pin 4: LED_ : O : Remote control signal transmitting flag.
pin 5: REM OUT : O : Remote control signal transmit terminal.
pin 6: VDD : - : Positive supply voltage.
pin 7: X OUT : O : Crystal connection.
pin 8: X IN : IN : Crystal connection.
pin 9: GND : - : Ground.
pin 10: RESET_ : IN : Reset signal input.
pin 11: KI 0 : IN : Key scan signal input.
pin 12: KI 1 : IN : Key scan signal input.
pin 13: KI 2 : IN : Key scan signal input.
pin 14: KI 3 : IN : Key scan signal input.
pin 15: KO 0 : O : Key scan output terminal.
pin 16: KO 1 : O : Key scan output terminal.
pin 17: KO 2 : O : Key scan output terminal.
pin 18: KO 3 : O : Key scan output terminal.
pin 19: KO 4 : O : Not in use.
pin 20: KO 5 : O : Not in use.

■EXPLODED VIEW • PARTSLIST

LCD/Main section

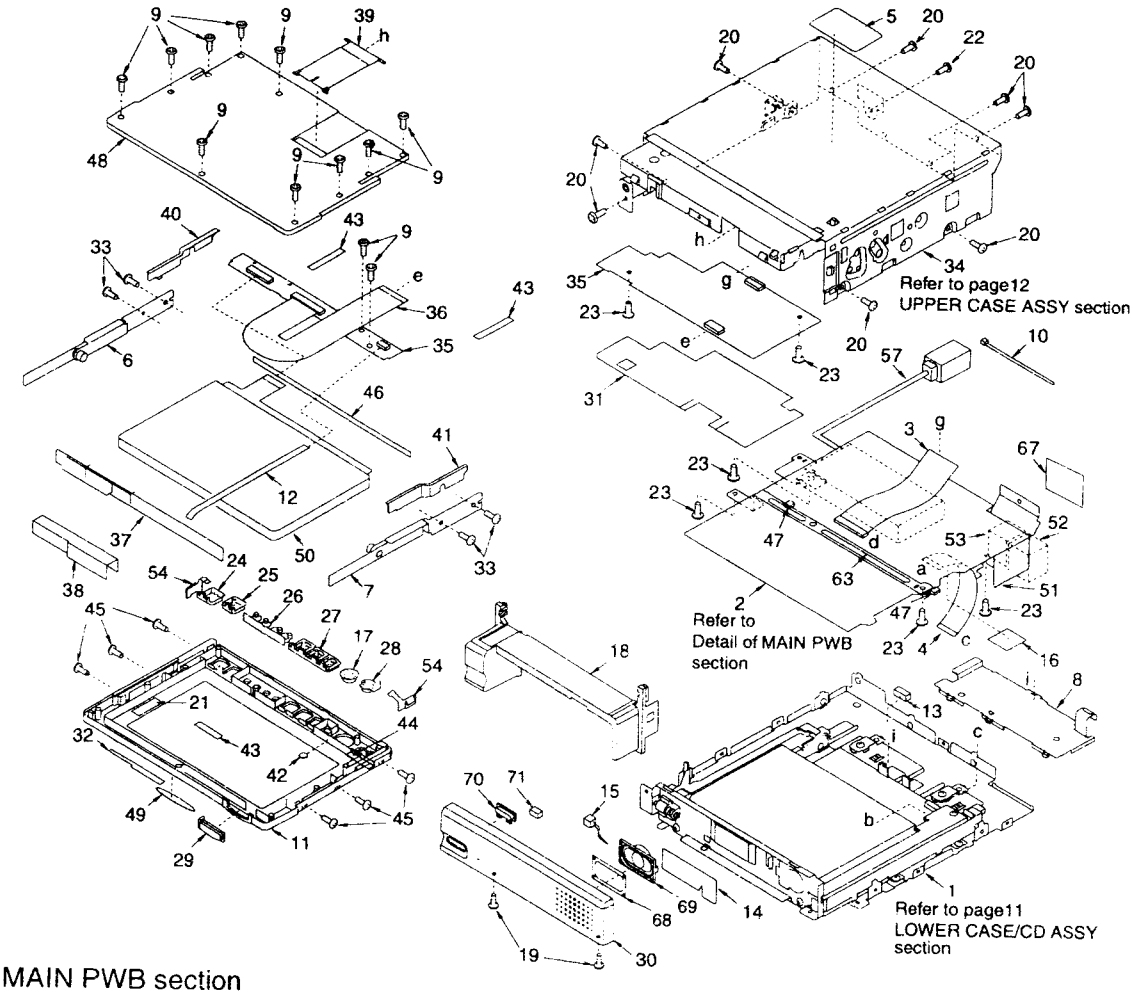

Detail of MAIN PWB section

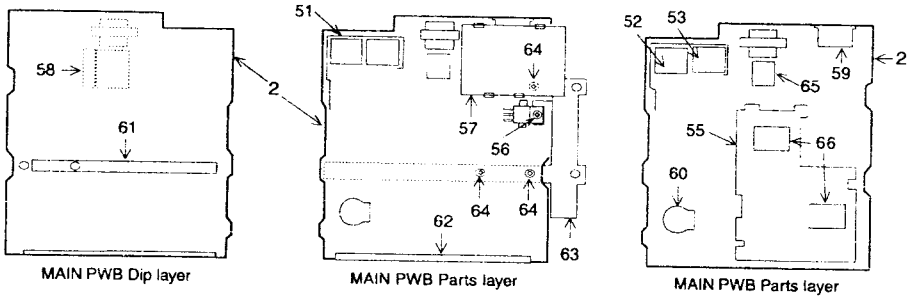

Note) Several different parts of the same reference number are alternative parts.One of those parts is used in the set.

NO.	PART NO.	DESCRIPTION	Q'TY
1	-------	LOWER CASE/CD ASSY	1
2	039-1714-00	MAIN PWB (WITHOUT COMPONENT)	1
3	039-1310-00	FLEXIBLE PWB(24P)	1
4	039-1311-00	FLEXIBLE PWB(30P)	1
5	286-9838-00	SETPLATE	1
6	948-0504-00	TORQUE BUSH (L)	1
7	948-0505-00	TORQUE BUSH (R)	1
8	331-2510-01	TRAY COVER	1
9	716-0872-11	SCREW	12
10	335-0833-01	LEAD HOLDER	1
11	947-0479-08	DIAL COVER ASSY	1
12	816-2476-00	FLAT WIRE	1
13	345-8269-10	CUSHION	1
14	347-6347-00	PROTECT SHEET	1
15	854-4502-00	EXTENSION LEAD (GRY/BLK)	1

NO.	PART NO.	DESCRIPTION	Q'TY
16	347-5896-00	PROTECT SHEET	1
17	380-5435-20	KNOB(JOY STICK)	1
18	940-7916-02	ESCUTHEON ASSY	1
19	714-2605-47	SCREW(M2.6x5FLAT)	2
20	714-2605-81	SCREW(M2.6x5)	8
21	347-5908-00	ADHESION TAPE	1
22	780-2603-00	P-SCREW(M2.6x3)	1
23	780-2604-00	IT-SCREW(M2.6x4)	6
24	382-5121-01	BUTTON	1
25	382-5122-01	BUTTON	1
26	382-5123-20	BUTTON	1
27	382-5124-01	BUTTON	1
28	382-5125-01	BUTTON	1
29	382-5126-20	BUTTON	1
30	370-5763-02	ESCUTHEON	1

NO.	PART NO.	DESCRIPTION	Q'TY
31	347-5891-03	INSULATOR	1
32	347-6349-00	INSULATOR	1
33	781-2635-00	SP-PR-SCREW	4
34	948-0511-20	UPPER CASE ASSY	1
35	039-1735-00	LCD-PWB (WITHOUT COMPONENT)	1
36	039-1309-10	FLEXIBLE PWB	1
37	039-1736-00	INVERTER PWB (WITHOUT COMPONENT)	1
38	347-6348-00	INSULATOR	1
39	335-5802-01	FPC-COVER	1
40	335-5858-00	ARM COVER (L)	1
41	335-5859-00	ARM COVER (R)	1
42	335-6000-00	SENSOR COVER	1
43	347-5880-00	SHIELD HSEET	3
44	347-5924-00	INSULATOR	1
45	714-2003-47	SCREW(M2x3)	6
46	347-5890-00	ADHESION TAPE	1
47	345-8317-00	RUBBER PART	2
48	377-2612-04	DIAL SUPPORT	1
49	378-0519-20	BADGE	1
50	379-0455-20	LCD-INDICATOR	1

NO.	PART NO.	DESCRIPTION	Q'TY
51	331-2935-00	PRESSED PARTS	1
52	074-1213-01	OUTLET SOCKET(13P/TV)	1
53	074-1170-00	OUTLET SOCKET(10P/EXT)	1
54	331-2745-00	PLATE SPRING	2
55	313-1754-01	HEAT SINK	1
56	714-3006-81	SCREW(M3x6)	1
57	880-5006A	GPS-RECEIVER	1
58	345-8272-00	RUBBER PART	1
59	074-1174-01	OUTLET SOCKET(10P)	1
60	088-0034-11	BATTERY(CR2032)	1
61	347-5875-01	INSULATOR	1
62	347-6352-00	SHIELD SHEET	1
63	331-2505-10	PWB-HOLDER	1
64	780-2603-00	IT-SCREW(M2.6x3)	3
65	948-0447-00 948-0561-00	GYROCOMPASS	1
66	345-8508-00	RUBBER PART	2
67	347-6614-00	SHADE	1
68	345-8251-00	SP-CUSHION	1
69	090-0346-00	SPEAKER	1
70	382-5120-10	BUTTON	1
71	345-8230-00	CUSHION	1

Break up method

Refer to the following exploded view

How to remove the CD mechanism

1. Remove the SCREWS(No.16x6,a~f) and take away LOWER CASE ASSY(No.14),RAIL HOLDER BRACKET(No.18),RAIL HOLDER ASSY (No.19), SP-LEAD HOLDER(No.25).
2. Remove the SCREWS(No.16x2,g,h) fixing the FRONE PLATE(No.10) from the front.
3. Remove the P-SCREW(No.17x6) and take away LOWER COVER(No.6).
4. Remove the SPRING(No.23x2).
5. Make a solder bridge between 15,16 pin of the FLEXIBLE PWB from the PICK UP ASSY (refer to the attentions on the page2).
6. Remove the hock(4 points) fixing CD DRIVE PWB (No.7) and remove the FLEXIBLE PWB (2 points).
7. When the SCREWS(No.16x8,i~p) on the right and left sides are removed, CD MECHANISM(No.1) can be removed.

※ Remove the solder bridge on the FLEXIBEL PWB when the CD MECHANISM is re-installed.

EXPLODED VIEW · PARTSLIST

LOWER CASE/CD ASSY section

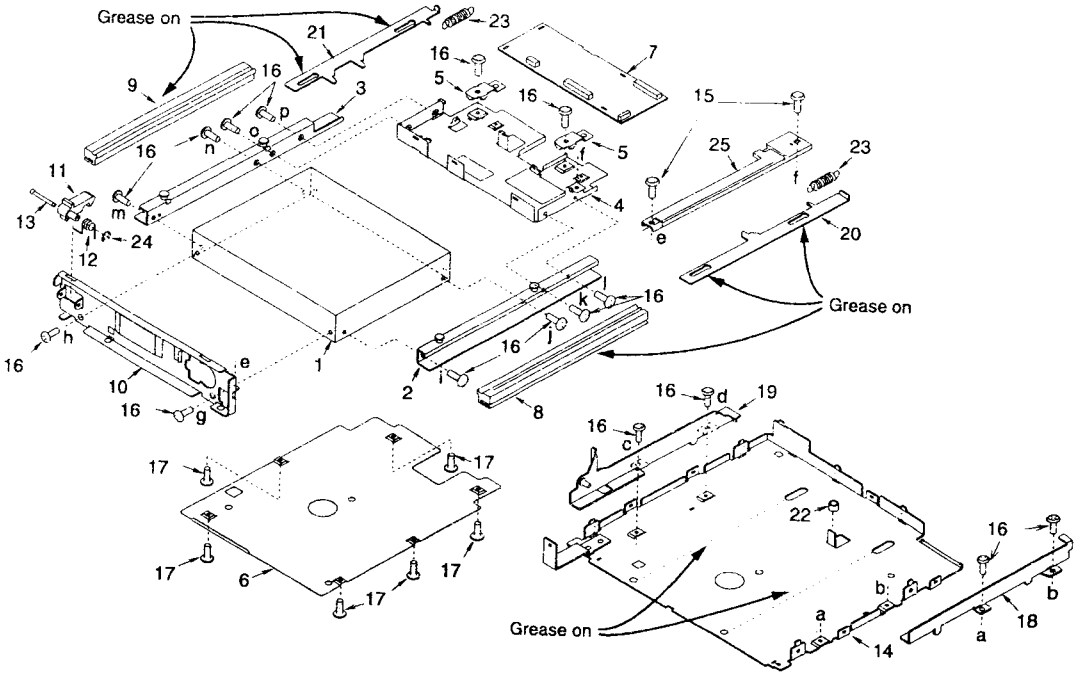

NO.	PART NO.	DESCRIPTION	Q'TY
1	929-0450-00	CD MECHANISM	1
2	948-0512-10	RAIL HOLDER ASSY (R)	1
3	948-0513-10	RAIL HOLDER ASSY (L)	1
4	331-2509-00	RAIL TRAY	1
5	331-2511-00	PLATE SPRING	2
6	304-0461-10	LOWER COVER	1
7	039-1734-00	CD DRIVE PWB (WITHOUT COMPONENT)	1
8	335-5813-00	RAIL (R)	1
9	335-5814-00	RAIL (L)	1
10	309-0711-10	FRONT PLATE	1
11	335-5801-00	LOCK LEVER	1
12	750-3331-01	SPRING	1
13	612-0397-00	SHAFT	1

NO.	PART NO.	DESCRIPTION	Q'TY
14	312-0004A	LOWER CASE ASSY	1
15	716-1611-00	P-SCREW	2
16	739-2630-10	P-SCREW(M2.6x3)	16
17	738-2030-16	P-SCREW(M2x3)	6
18	331-2508-10	RAIL HOLDER BRACKET	1
19	948-0495-10	RAIL HOLDER ASSY	1
20	331-2501-10	LOCK PLATE (R)	1
21	331-2502-00	LOCK PLATE (L)	1
22	631-2032-01	STOPPER	1
23	750-3332-00	SPRING	2
24	743-1500-20	E-RING	1
25	335-6355-00	SP-LEAD HOLDER	1

UPPER CASE ASSY section

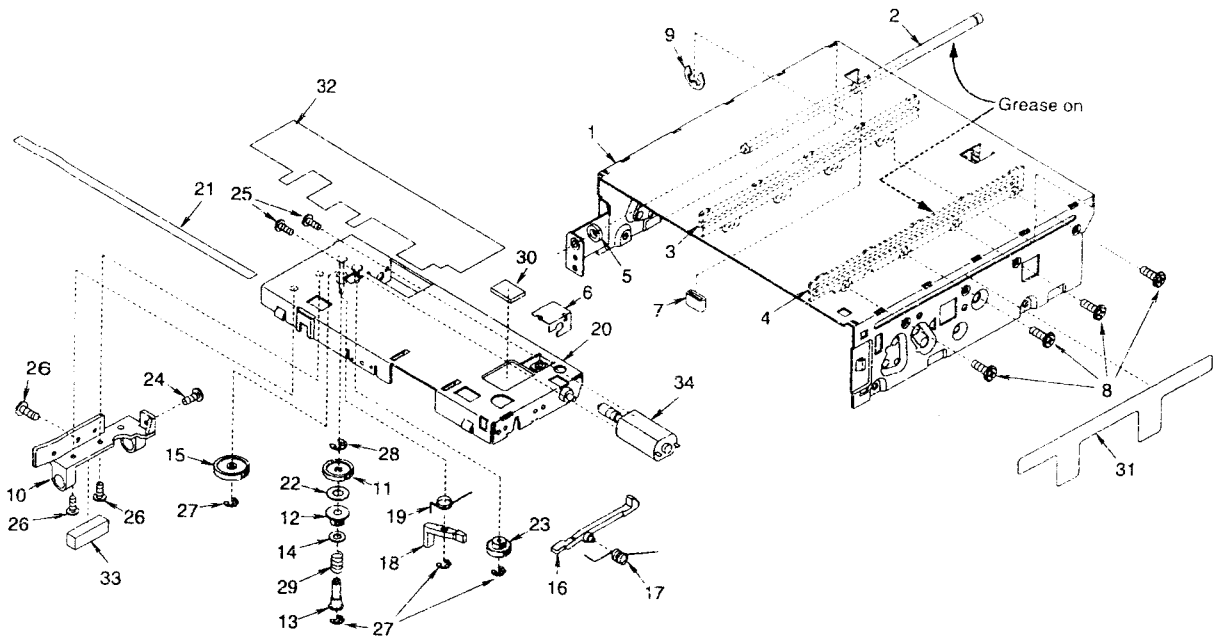

NO.	PART NO.	DESCRIPTION	Q'TY
1	310-1665-02	UPPER CASE	1
2	612-0396-00	SHAFT	1
3	335-6314-00	RACK GEAR	1
4	331-2504-10	GUIDE RAIL	1
5	345-8229-00	O-RING	1
6	331-2675-00	WORM SPRING	1
7	631-2032-00	STOPPER	1
8	738-2630-17	P-SCREW(M2.6x3)	4
9	743-4000-00	E-RING	1
10	623-1032-00	HOLDER	1
11	613-0679-00	GEAR-B	1
12	613-0689-00	GEAR-C	1
13	341-1676-00	SPACER PIN	1
14	745-0794-00	WASHER	1
15	613-0688-00	GEAR-D	1
16	335-5816-00	LOCK LEVER	1
17	750-3333-00	LOCK SPRING	1

NO.	PART NO.	DESCRIPTION	QTY
18	335-5805-00	SWITCH LEVER	1
19	750-3334-00	SWITCH SPRING	1
20	948-0498-10	S-PLATE ASSY	1
21	347-5877-00	SAHDE	1
22	345-5121-01	RUBBER PARTS	1
23	613-0300-00	GEAR-A	1
24	781-2635-00	SCREW	1
25	714-2003-81	SCREW(M2x3)	2
26	714-2604-41	SCREW(M2.6x4)	3
27	743-1500-10	E-RING	4
28	743-3000-00	E-RING	1
29	750-3057-01	SPRING-G	1
30	345-8233-10	CUSHION	1
31	347-5869-00	PROTECT SHEET (R)	1
32	347-5897-20	SHADE	1
33	345-8232-10	CUSHION	1
34	634-0014-00	MOTOR ASSY	1

CD mechanism section

929-0450-00

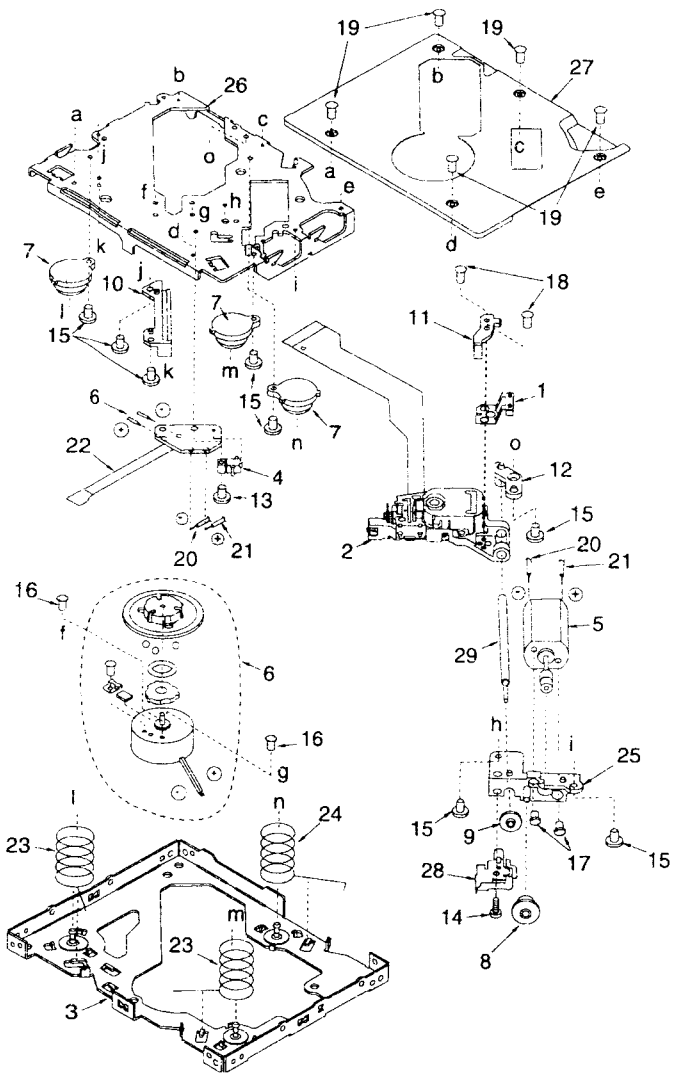

NO.	PART NO.	DESCRIPTION	Q'TY
1	966-0454-00	SH-RACK ASSY	1
2	969-0052-01	PICK UP UNIT	1
3	966-0478-00	BASE PLATE ASSY	1
4	013-7100-00	SWITCH	1
5	SMA-146-100	SLED MOTOR ASSY	1
6	SMA-163-100	SPINDLE MOTOR ASSY	1
7	629-0067-00	DAMPER	3
8	621-0255-02	SECOND GEAR	1
9	621-0256-01	LS-GEAR	1
10	621-0390-00	PICK UP GUIDE	1
11	621-0391-02	SCREW HOLDER BASE	1
12	621-0392-01	LS-HOLDER(R)	1
13	714-2006-81	SCREW(M2x6)	1
14	716-0675-00	SCREW(M5x5)	1
15	716-1716-00	SCREW(M2x3)	8
16	716-1733-00	SCREW(M1.7x2.3)	2
17	732-2004-11	SEMS SCREW(M2x3.5)	2
18	739-1735-17	P-SCREW(M1.7x3.5)	2
19	738-1720-17	PRECICION SCREW(M1.7x2)	5
20	816-2474-00	MOTOR READ(WHT)	1
21	816-2473-00	MOTOR READ(BLUE)	1
22	039-1295-00	DRIVE FPC (WITHOUT COMPONENT)	1
23	750-3322-00	C-SPRING(T-TYPE)	2
24	750-3321-00	C-SPRING(K-TYPE)	1
25	621-0416-00	MOTOR HOLDER	1
26	620-0784-00	DRIVE PLATE	1
27	620-0786-00	MAKE UP PLATE	1
28	620-0785-00	DOG PLATE	1
29	624-3008-00	LEAD SCREW	1

■ELECTRICAL PARTS LIST

Main PWB(B1) section

Note) Several different parts of the same reference number are alternative parts. One of those parts is used in the set.

REF No.	PART No.	DESCRIPTION
BAT301	088-0034-11	CR2034-HE4
C001	168-1045-06	0.1 μF
C002	168-1045-06	0.1 μF
C003	168-1045-06	0.1 μF
C051	184-3383-32	16V3300 μF
C053	168-1045-06	0.1 μF
C054	042-0403-01	16V10 μF TAN
C055	163-1073-31	16V100 μF
C056	168-1045-06	0.1 μF
C057	168-1045-06	0.1 μF
C058	168-2222-05	2200pF
C059	042-0531-02	10V1000 μF
C060	168-1045-06	0.1 μF
C061	163-1073-31	16V100 μF
C068	163-4763-30	16V47 μF
C069	163-1063-30	16V10 μF
C070	163-1073-31	16V100 μF
C071	168-1045-06	0.1 μF
C072	168-1045-06	0.1 μF
C073	163-1063-30	16V10 μF
C074	163-2273-25	10V 220 μF
C075	168-1045-06	0.1 μF
C076	163-1063-30	16V10 μF
C077	163-1073-31	16V100 μF
C078	163-1063-30	16V10 μF
C079	168-1045-06	0.1 μF
C081	163-1053-60	50V1 μF

REF No.	PART No.	DESCRIPTION
C082	168-1045-06	0.1 μF
C083	168-1045-06	0.1 μF
C084	168-1045-06	0.1 μF
C103	168-1045-06	0.1 μF
C105	042-0416-02	10V10 μF
C108	168-1045-06	0.1 μF
C111	163-4763-30	16V47 μF
C141	168-1535-06	0.015 μF
C142	163-1063-30	16V10 μF
C143	168-1045-06	0.1 μF
C144	168-1025-06	1000pF
C145	168-1025-06	1000pF
C146	166-1011-00	100pF CH
C147	168-1045-06	0.1 μF
C148	178-2242-78	0.22 μF
C149	178-2242-78	0.22 μF
C150	163-1073-31	16V100 μF
C151	168-1045-06	0.1 μF
C152	168-1045-06	0.1 μF
C153	163-1053-60	50V1 μF
C201	168-1045-06	0.1 μF
C202	042-0416-02	10V10 μF
C203	168-1045-06	0.1 μF
C204	166-1201-00	12pF CH
C205	166-1201-00	12pF CH
C206	168-1045-06	0.1 μF
C207	042-0416-02	10V10 μF

REF No.	PART No.	DESCRIPTION
C208	168-1045-06	0.1 μF
C209	168-1032-05	0.01 μF
C210	168-1045-06	0.1 μF
C211	168-1045-06	0.1 μF
C212	042-0416-02	10V10 μF
C213	168-1045-06	0.1 μF
C214	168-1045-06	0.1 μF
C215	042-0403-01	16V10 μF TAN
C216	168-1022-05	1000pF
C217	042-0397-04	16V2.2 μF
C218	168-1032-05	0.01 μF
C219	168-1045-06	0.1 μF
C221	168-1045-06	0.1 μF
C223	168-1045-06	0.1 μF
C224	168-1045-06	0.1 μF
C225	168-1045-06	0.1 μF
C226	168-1045-06	0.1 μF
C227	168-1045-06	0.1 μF
C228	168-1045-06	0.1 μF
C229	168-1045-06	0.1 μF
C230	168-1045-06	0.1 μF
C231	168-1045-06	0.1 μF
C233	166-1011-00	100pF CH
C234	168-1022-05	1000pF
C301	168-1045-06	0.1 μF
C302	168-1045-06	0.1 μF
C303	168-1045-06	0.1 μF

REF No.	PART No.	DESCRIPTION
C304	168-1045-06	0.1 μF
C305	042-0416-02	10V10 μF
C306	168-1032-05	0.01 μF
C307	168-1045-06	0.1 μF
C308	168-1045-06	0.1 μF
C309	042-0416-02	10V10 μF
C310	168-1045-06	0.1 μF
C311	168-1045-06	0.1 μF
C312	042-0416-02	10V10 μF
C314	168-4712-05	470pF
C315	168-1045-06	0.1 μF
C316	168-1045-06	0.1 μF
C317	178-2242-78	0.22 μF
C318	168-1045-06	0.1 μF
C319	042-0416-02	10V10 μF
C320	178-4742-78	0.47 μF
C321	168-1045-06	0.1 μF
C323	042-0416-02	10V10 μF
C324	042-0416-02	10V10 μF
C325	168-1045-06	0.1 μF
C326	042-0416-02	10V10 μF
C327	168-1045-06	0.1 μF
C328	042-0416-02	10V10 μF
C332	042-0416-02	10V10 μF
C334	168-1045-06	0.1 μF
C335	168-1045-06	0.1 μF
C336	168-1045-06	0.1 μF
C337	168-1045-06	0.1 μF
C338	168-1045-06	0.1 μF
C339	168-1045-06	0.1 μF
C340	168-1045-06	0.1 μF
C401	168-1045-06	0.1 μF
C402	168-1045-06	0.1 μF
C403	042-0416-02	10V10 μF
C404	168-1045-06	0.1 μF
C405	042-0416-02	10V10 μF
C406	168-1045-06	0.1 μF
C407	168-1045-06	0.1 μF
C408	168-4712-05	470pF
C409	168-1045-06	0.1 μF
C410	178-4742-78	0.47 μF
C411	042-0416-02	10V10 μF
C412	168-1045-06	0.1 μF
C413	168-1045-06	0.1 μF
C414	168-1045-06	0.1 μF
C418	168-1022-05	1000pF
C419	168-1022-05	1000pF
C420	168-1022-05	1000pF
C421	168-1022-05	1000pF
C422	168-1022-05	1000pF
C423	168-1045-06	0.1 μF
C424	166-5601-00	56pF CH
C425	168-1022-05	1000pF
C426	168-1022-05	1000pF
C429	178-4742-78	0.47 μF
C430	168-1045-06	0.1 μF
C431	168-1045-06	0.1 μF
D001	001-0516-00	MA111
D002	001-0367-00	1SS226
D051	001-0188-01	1S1885A
D054	001-0516-00	MA111
D055	001-2602-90	U3FWK44N-T146
D060	001-0516-00	MA111
D062	001-0528-57	MA8120-H
D063	001-0516-00	MA111
D064	001-0516-00	MA111
D065	001-0516-00	MA111
D078	001-0528-11	MA8024
D079	001-0528-40	MA8075-L
D080	001-0367-00	1SS226
D081	001-0528-48	MA8091-H
D100	001-0516-00	MA111
D101	001-0584-13	MA8030
D202	001-0516-00	MA111
D203	001-0516-00	MA111
D204	001-0516-00	MA111
D205	001-0516-00	MA111
D206	001-0516-00	MA111

REF No.	PART No.	DESCRIPTION
D301	001-0655-00	1SS294
D302	001-0516-00	MA111
D508	001-0528-14	MA8030-L
D509	001-0528-14	MA8030-L
D511	001-4902-92	HZM27FA-TL
D512	001-4902-92	HZM27FA-TL
FIL201	060-3102-91	NFM51R00P206
FIL202	060-3104-00	NFM41P11C204
FIL301	060-3102-90	NFM51R00P106
FIL401	060-3103-00	NFM839R02G101B1
FIL402	060-3102-91	NFM51R00P206
FIL403	060-3102-91	NFM51R00P206
FIL404	060-3102-91	NFM51R00P206
FIL405	060-3102-91	NFM51R00P206
FIL406	060-3101-05	NFM39R12C102B1
FIL501	060-3101-05	NFM39R12C102B1
FIL502	060-3101-05	NFM39R12C102B1
FIL505	060-3101-05	NFM39R12C102B1
FIL506	060-3101-05	NFM39R12C102B1
FIL507	060-3101-05	NFM39R12C102B1
FIL508	060-3101-05	NFM39R12C102B1
FIL509	060-3101-05	NFM39R12C102B1
FIL510	060-3101-05	NFM39R12C102B1
IC051	051-3226-00	PQ1CZ1
IC054	051-1014-05	TA7291F
IC055	051-1905-01	AN77L05M
IC056	051-0718-10	NJM7808FA
IC101	051-6328-08	BU9480F
IC107	051-3013-00	M5203AFP
IC108	051-2035-00	TDA7052A
IC201	051-9307-30	MSM514260C
IC202	051-6326-00	LC895194-X85
IC203	051-1822-05	S-80732AN-DW-X
IC204	051-7236-08	TC7W126FU-EL
IC205	052-5030-00	μPD78014GC
IC301	051-1855-05	TC7W14F
IC303	052-3519-10	HD6437043AF49F
IC304	051-0869-55	NJM2103M
IC306	051-9108-00	TC551001BFTL-70
IC307	051-6807-00	μPD65804GJ-P06
IC308	051-9308-10	HM5118160CTT-6
IC309	051-9308-10	HM5118160CTT-6
IC310	051-9308-10	HM5118160CTT-6
IC311	051-9308-10	HM5118160CTT-6
IC312	052-3518-00	MBM29F800BA
IC313	052-3518-00	MBM29F800BA
IC401	051-9309-10	M5M5118165B
IC402	051-6416-00	HD64411F
IC403	051-6418-10	ADV7123KST50
IC404	051-3902-00	AD1580ART
J001	074-1174-02	10P
J201	074-1059-30	30P
J401	074-1179-74	24P
J501	074-1170-00	DIN 10P
J502	074-1213-01	OUTLET SOCKET
L001	010-2285-51	BLM21A05PT
L005	010-2285-51	BLM21A05PT
L051	010-3023-00	100 μH
L052	010-2279-00	4.7 μH
L101	010-2285-51	BLM21A05PT
L201	010-2285-51	BLM21A05PT
L202	010-2285-51	BLM21A05PT
L203	010-2285-51	BLM21A05PT
L204	010-2285-51	BLM21A05PT
L205	010-2285-51	BLM21A05PT
L206	010-2285-51	BLM21A05PT
L301	010-2285-51	BLM21A05PT
L302	010-2285-51	BLM21A05PT
L303	010-2285-51	BLM21A05PT
L304	010-2285-51	BLM21A05PT
L305	010-2285-51	BLM21A05PT
L307	010-2285-51	BLM21A05PT
L309	010-2285-51	BLM21A05PT
L313	010-2285-51	BLM21A05PT
L315	010-2285-51	BLM21A05PT
L401	010-2285-51	BLM21A05PT
L402	010-2285-51	BLM21A05PT
L403	010-2285-51	BLM21A05PT

REF No.	PART No.	DESCRIPTION
L404	010-2285-51	BLM21A05PT
Q001	102-2712-00	2SC2712
Q002	102-2712-00	2SC2712
Q003	125-0021-07	DTA113ZU
Q004	125-0002-02	RN2402
Q051	102-2712-00	2SC2712
Q052	102-2712-00	2SC2712
Q063	125-2004-02	RN1402
Q064	102-2873-00	2SC2873
Q065	102-2712-00	2SC2712
Q066	125-0002-02	RN2402
Q067	100-1162-00	2SA1162
Q068	102-2712-00	2SC2712
Q069	102-2712-00	2SC2712
Q070	125-2004-02	RN1402
Q071	125-2004-02	RN1402
Q072	101-1205-65	2SB1205S,T
Q073	125-2004-02	RN1402
Q075	102-2873-00	2SC2873
Q106	125-2004-02	RN1402
Q107	125-2004-02	RN1402
Q108	102-3326-00	2SC3326
Q109	125-2004-02	RN1402
Q110	125-2004-02	RN1402
Q204	060-4011-80	CPT-182S-C
Q301	125-0002-02	RN2402
Q501	102-2712-00	2SC2712
Q502	102-2712-00	2SC2712
Q503	102-2712-00	2SC2712
Q504	102-2712-00	2SC2712
Q505	125-2004-02	RN1402
Q506	125-2004-02	RN1402
Q507	125-2004-02	RN1402
Q508	125-2004-02	RN1402
R001	117-1031-10	1/10W 10kΩ
R002	117-1021-10	1/10W 1kΩ
R004	119-1021-10	1/16W 1kΩ
R005	119-1021-10	1/16W 1kΩ
R006	117-1021-10	1/10W 1kΩ
R007	119-4731-10	1/16W 47kΩ
R008	119-4731-10	1/16W 47kΩ
R009	117-1021-10	1/10W 1kΩ
R010	117-2721-10	1/10W 2.7kΩ
R011	117-2721-10	1/10W 2.7kΩ
R012	119-2231-10	1/16W 22kΩ
R013	119-1031-10	1/16W 10kΩ
R014	117-4711-10	1/10W 470Ω
R015	119-3331-10	1/16W 33kΩ
R016	119-1021-10	1/16W 1kΩ
R030	117-4711-10	1/10W 470Ω
R051	117-3311-10	1/10W 330Ω
R052	119-1041-10	1/16W 100kΩ
R053	119-1041-10	1/16W 100kΩ
R054	117-5611-10	1/10W 560Ω
R058	032-0106-75	1/10W 3kΩ ±0.5%
R059	032-0106-62	1/10W 1kΩ ±0.5%
R071	117-2711-10	1/10W 270Ω
R072	119-1031-10	1/16W 10kΩ
R073	119-1031-10	1/16W 10kΩ
R077	117-4791-10	1/10W 4.7Ω
R078	117-4731-10	1/10W 47kΩ
R081	116-3321-10	1/8W 3.3kΩ
R082	117-5621-10	1/10W 5.6kΩ
R083	119-1021-10	1/16W 1kΩ
R084	119-1021-10	1/16W 1kΩ
R085	119-5611-10	1/16W 560Ω
R086	117-1821-10	1/10W 1.8kΩ
R087	119-1041-10	1/16W 100kΩ
R088	119-1031-10	1/16W 10kΩ
R089	032-0104-60	1/4W 220Ω
R090	032-0104-60	1/4W 220Ω
R091	032-0104-57	1/4W 47Ω
R092	032-0104-57	1/4W 47Ω
R093	032-0104-57	1/4W 47Ω
R097	117-3911-10	1/10W 390Ω
R148	119-1041-10	1/16W 100kΩ
R153	119-2231-10	1/16W 22kΩ
R154	119-1031-10	1/16W 10kΩ

REF No.	PART No.	DESCRIPTION
R155	119-1231-10	1/16W 12kΩ
R156	119-2231-10	1/16W 22kΩ
R157	119-2231-10	1/16W 22kΩ
R158	119-2231-10	1/16W 22kΩ
R159	119-2231-10	1/16W 22kΩ
R160	119-3311-10	1/16W 330Ω
R161	119-6811-10	1/16W 680Ω
R162	119-1021-10	1/16W 1kΩ
R163	119-1021-10	1/16W 1kΩ
R164	119-1041-10	1/16W 100kΩ
R165	119-1221-10	1/16W 1.2kΩ
R166	119-4721-10	1/16W 4.7kΩ
R167	119-1041-10	1/16W 100kΩ
R168	119-2241-10	1/16W 220kΩ
R169	119-6831-10	1/16W 68kΩ
R170	119-1041-10	1/16W 100kΩ
R171	119-6831-10	1/16W 68kΩ
R201	050-0140-51	22Ω×4
R202	050-0140-51	22Ω×4
R203	050-0140-51	22Ω×4
R204	050-0140-51	22Ω×4
R205	119-1021-10	1/16W 1kΩ
R206	119-1241-10	1/16W 120kΩ
R207	119-1031-10	1/16W 10kΩ
R208	119-6801-10	1/16W 68Ω
R209	119-4731-10	1/16W 47kΩ
R210	050-0140-51	22Ω×4
R211	119-2201-10	1/16W 22Ω
R212	050-0140-51	22Ω×4
R213	119-8201-10	1/16W 82Ω
R214	119-8201-10	1/16W 82Ω
R215	119-8201-10	1/16W 82Ω
R216	119-8201-10	1/16W 82Ω
R217	119-1031-10	1/16W 10kΩ
R218	119-4701-10	1/16W 47Ω
R219	119-4701-10	1/16W 47Ω
R220	119-8201-10	1/16W 82Ω
R221	119-4701-10	1/16W 47Ω
R222	119-4701-10	1/16W 47Ω
R223	119-4701-10	1/16W 47Ω
R224	119-1031-10	1/16W 10kΩ
R225	119-1021-10	1/16W 1kΩ
R226	119-1031-10	1/16W 10kΩ
R227	119-1021-10	1/16W 1kΩ
R228	119-1031-10	1/16W 10kΩ
R229	119-1031-10	1/16W 10kΩ
R230	119-1031-10	1/16W 10kΩ
R231	119-1031-10	1/16W 10kΩ
R232	119-1041-10	1/16W 100kΩ
R233	119-1041-10	1/16W 100kΩ
R235	050-0140-51	22Ω×4
R237	050-0140-51	22Ω×4
R238	119-1041-10	1/16W 100kΩ
R239	119-1041-10	1/16W 100kΩ
R240	119-1041-10	1/16W 100kΩ
R241	119-1041-10	1/16W 100kΩ
R243	119-2201-10	1/16W 22Ω
R245	119-2201-10	1/16W 22Ω
R246	119-2201-10	1/16W 22Ω
R247	119-2201-10	1/16W 22Ω
R248	119-2201-10	1/16W 22Ω

REF No.	PART No.	DESCRIPTION
R249	119-2201-10	1/16W 22Ω
R250	119-2201-10	1/16W 22Ω
R251	119-1021-10	1/16W 1kΩ
R252	119-1021-10	1/16W 1kΩ
R253	119-1021-10	1/16W 1kΩ
R260	119-4731-10	1/16W 47kΩ
R261	119-1031-10	1/16W 10kΩ
R262	119-1041-10	1/16W 100kΩ
R270	119-2201-10	1/16W 22Ω
R271	119-2201-10	1/16W 22Ω
R272	119-2201-10	1/16W 22Ω
R273	119-2201-10	1/16W 22Ω
R274	050-0140-51	22Ω×4
R275	050-0140-51	22Ω×4
R301	119-1531-10	1/16W 15kΩ
R302	119-1021-10	1/16W 1kΩ
R303	119-1041-10	1/16W 100kΩ
R304	119-5611-10	1/16W 560Ω
R305	050-0140-51	22Ω×4
R306	119-2201-10	1/16W 22Ω
R307	119-4721-10	1/16W 4.7kΩ
R308	050-0140-51	22Ω×4
R309	050-0140-51	22Ω×4
R311	050-0140-51	22Ω×4
R312	119-2201-10	1/16W 22Ω
R313	119-5611-10	1/16W 560Ω
R314	119-1031-10	1/16W 10kΩ
R315	032-0106-52	1/10W 27kΩ±0.5%
R316	119-2201-10	1/16W 22Ω
R317	050-0140-51	22Ω×4
R318	117-3021-10	1/10W 3kΩ
R319	117-2011-10	1/10W 200Ω
R320	032-0106-60	1/10W 10kΩ±0.5%
R321	050-0140-51	22Ω×4
R322	119-1021-10	1/16W 1kΩ
R323	119-2201-10	1/16W 22Ω
R325	050-0140-51	22Ω×4
R326	050-0140-51	22Ω×4
R327	119-8201-10	1/16W 82Ω
R328	050-0140-51	22Ω×4
R329	050-0140-51	22Ω×4
R330	050-0140-51	22Ω×4
R331	119-2201-10	1/16W 22Ω
R332	119-2201-10	1/16W 22Ω
R333	050-0140-51	22Ω×4
R334	050-0140-51	22Ω×4
R335	119-2201-10	1/16W 22Ω
R337	050-0140-51	22Ω×4
R338	119-2201-10	1/16W 22Ω
R339	050-0140-51	22Ω×4
R340	119-2201-10	1/16W 22Ω
R341	050-0140-51	22Ω×4
R342	119-2201-10	1/16W 22Ω
R343	119-2201-10	1/16W 22Ω
R344	050-0140-51	22Ω×4
R345	050-0140-51	22Ω×4
R346	050-0140-51	22Ω×4
R347	050-0140-51	22Ω×4
R348	119-2201-10	1/16W 22Ω
R349	119-2201-10	1/16W 22Ω
R350	050-0140-51	22Ω×4

REF No.	PART No.	DESCRIPTION
R351	050-0140-51	22Ω×4
R352	119-1041-10	1/16W 100kΩ
R353	119-1041-10	1/16W 100kΩ
R354	119-1041-10	1/16W 100kΩ
R355	119-2201-10	1/16W 22Ω
R356	119-1031-10	1/16W 10kΩ
R357	119-4731-10	1/16W 47kΩ
R358	119-1021-10	1/16W 1kΩ
R359	119-1021-10	1/16W 1kΩ
R360	119-1041-10	1/16W 100kΩ
R361	119-1041-10	1/16W 100kΩ
R362	119-1041-10	1/16W 100kΩ
R363	119-1041-10	1/16W 100kΩ
R364	119-1041-10	1/16W 100kΩ
R401	050-0140-51	22Ω×4
R402	050-0140-51	22Ω×4
R403	050-0140-51	22Ω×4
R404	050-0140-51	22Ω×4
R405	050-0140-51	22Ω×4
R406	117-3021-10	1/10W 3kΩ
R407	050-0140-51	22Ω×4
R408	050-0140-51	22Ω×4
R409	050-0140-51	22Ω×4
R410	119-1031-10	1/16W 10kΩ
R411	050-0140-50	150Ω×4
R412	050-0140-50	150Ω×4
R413	050-0140-50	150Ω×4
R414	050-0140-50	150Ω×4
R415	119-1511-10	1/16W 150Ω
R416	119-1511-10	1/16W 150Ω
R417	119-1031-10	1/16W 10kΩ
R418	119-1031-10	1/16W 10kΩ
R419	117-2221-10	1/10W 2.2kΩ
R420	119-4721-10	1/16W 4.7kΩ
R421	119-1221-10	1/16W 1.2kΩ
R422	119-5611-10	1/16W 560Ω
R423	117-1511-10	1/10W 150Ω
R424	117-1511-10	1/10W 150Ω
R425	117-1511-10	1/10W 150Ω
R426	119-1211-10	1/16W 120Ω
R427	119-1011-10	1/16W 100Ω
R428	119-1021-10	1/16W 1kΩ
R501	119-1031-10	1/16W 10kΩ
R502	119-2231-10	1/16W 22kΩ
R503	119-1031-10	1/16W 10kΩ
R506	119-2231-10	1/16W 22kΩ
R507	117-1021-10	1/10W 1kΩ
R508	119-1031-10	1/16W 10kΩ
R510	119-4731-10	1/16W 47kΩ
R511	119-1031-10	1/16W 10kΩ
R512	119-4731-10	1/16W 47kΩ
R513	119-1031-10	1/16W 10kΩ
R514	119-1031-10	1/16W 10kΩ
R515	119-1031-10	1/16W 10kΩ
R516	119-1031-10	1/16W 10kΩ
R517	119-1031-10	1/16W 10kΩ
T050	009-0673-01	CHOKE
X201	061-3500-90	16.920MHz
X202	060-1503-50	CSTCC9.83MG-TL
X301	061-4501-50	7.0805MHz
X401	061-4502-50	8.402097MHz

Inverter PWB(B2) section(B2)

REF No.	PART No.	DESCRIPTION
C901	178-2242-78	0.22 μF
C902	168-1042-78	16V 0.1 μF
C903	168-1032-05	0.01 μF
C904	178-2242-78	0.22 μF
C905	043-0504-51	10V 3.3 μF
C906	168-4712-05	470pF
C907	042-0416-02	10V10 μF
C908	168-1022-05	1000pF
C909	043-0504-51	10V 3.3 μF
C910	043-0504-51	10V 3.3 μF
C911	043-0510-50	16V 22 μF
C912	168-1032-05	0.01 μF
C913	168-2732-05	16V 0.027 μF

REF No.	PART No.	DESCRIPTION
C914	043-0521-50	3kV 22pF 5%
C915	043-0308-94	3kV 68pF
C916	168-1042-78	16V 0.1 μF
C917	178-1052-78	1 μF
D901	001-0528-29	MA8051-M
D902	001-0413-00	MA153
D903	001-0413-00	MA153
F901	060-8023-52	0.75A
IC901	051-3916-90	OZ965
IC902	051-3040-90	NJM2125F
IC903	125-9014-90	SI4559EY
J901	074-1100-09	9P
L901	010-3059-90	ZJYS51R5-2P-G

REF No.	PART No.	DESCRIPTION
P901	076-0568-00	2P
Q901	125-2004-03	RN1403
Q902	192-3734-00	2AC3734
Q903	190-1461-00	2SA1461
Q904	192-3734-00	2AC3734
Q905	102-2712-00	2SC2712
Q906	192-3734-00	2AC3734
R901	032-0104-56	1/4W 1.3kΩ
R902	032-0104-56	1/4W 1.3kΩ
R903	119-2431-10	1/16W 24kΩ
R904	119-6821-15	1/16W 6.8kΩ
R905	119-4731-10	1/16W 47kΩ
R906	119-4731-10	1/16W 47kΩ

REF No.	PART No.	DESCRIPTION
R907	119-1041-10	1/16W 100kΩ
R908	119-3331-10	1/16W 33kΩ
R909	119-1541-10	1/16W 150kΩ
R910	032-0104-01	1/4W 820Ω
R911	032-0104-01	1/4W 820Ω
R912	119-6831-10	1/16W 68kΩ
R913	119-5631-10	1/16W 56kΩ

REF No.	PART No.	DESCRIPTION
R914	119-1041-10	1/16W 100kΩ
R915	119-5631-10	1/16W 56kΩ
R916	119-1021-10	1/16W 1kΩ
R917	119-3321-10	1/16W 3.3kΩ
R919	119-3301-10	1/16W 33Ω
R920	119-2231-10	1/16W 22kΩ
R921	119-1051-10	1/16W 1MΩ

REF No.	PART No.	DESCRIPTION
R922	119-8211-10	1/16W 820Ω
R923	119-2021-10	1/16W 2kΩ
R924	119-1031-10	1/16W 10kΩ
S901	013-6514-50	LS6J2M-1FG
T903	007-1160-00	TRANS

CD drive PWB(B3) section

REF No.	PART No.	DESCRIPTION
C1	163-1073-10	6.3V100 μF
C2	163-4763-10	6.3V47 μF
C3	178-1042-78	0.1 μF
C4	176-2201-00	22pF CH
C5	176-1801-00	18pF CH
C6	176-1801-00	18pF CH
C7	176-8201-00	82pF CH
C8	178-1042-78	0.1 μF
C9	178-2242-78	0.22 μF
C10	178-2242-78	0.22 μF
C11	176-4701-00	47pF CH
C12	178-1532-78	0.015 μF
C13	178-1032-78	0.01 μF
C14	178-2722-78	2700pF
C15	178-4722-78	4700pF
C17	178-4712-78	470pF
C18	178-4712-78	470pF
C19	178-4732-78	0.047 μF
C20	178-4732-78	0.047 μF
C21	178-4732-78	0.047 μF
C22	178-4732-78	0.047 μF
C23	178-1032-78	0.01 μF
C25	163-1073-31	16V100 μF
C26	178-1042-78	0.1 μF
C27	178-1042-78	0.1 μF
C29	178-1042-78	0.1 μF
C30	178-1042-78	0.1 μF
C32	178-1032-78	0.01 μF
C33	178-1042-78	0.1 μF
C34	176-1501-00	15pF CH
C35	176-1501-00	15pF CH

REF No.	PART No.	DESCRIPTION
C39	178-1042-78	0.1 μF
C40	178-1042-78	0.1 μF
C41	163-1073-10	6.3V100 μF
C43	163-1073-10	6.3V100 μF
C44	163-4763-10	6.3V47 μF
C45	163-1073-10	6.3V100 μF
C46	178-1032-78	0.01 μF
C47	178-1042-78	0.1 μF
C48	178-1032-78	0.01 μF
C49	176-6801-00	68pF CH
C51	178-1032-78	0.01 μF
C52	178-1032-78	0.01 μF
C54	163-4763-10	6.3V47 μF
C55	178-1042-78	0.1 μF
C56	178-1042-78	0.1 μF
C58	178-1042-78	0.1 μF
C59	178-2222-78	2200pF
D1	001-7036-80	CL-200IR-X
IC1	051-6330-00	TC9432AF
IC2	051-5704-00	TA2096FN
IC3	051-6026-08	TA2058F
J1	074-1059-30	30P
J2	074-1049-17	17P
J3	074-1049-06	6P
J4	076-0478-02	2P
L1	010-2155-93	10 μH
L2	010-2199-74	10 μH J
Q1	101-1188-00	2SB1188
Q2	102-2712-00	2SC2712
R1	117-1011-10	1/10W 100Ω
R2	117-1841-10	1/10W 180kΩ

REF No.	PART No.	DESCRIPTION
R3	117-1841-10	1/10W 180kΩ
R4	117-2201-10	1/10W 22Ω
R5	117-8231-10	1/10W 82kΩ
R6	117-1041-10	1/10W 100kΩ
R7	117-1041-10	1/10W 100kΩ
R8	117-1031-10	1/10W 10kΩ
R9	117-2221-10	1/10W 2.2kΩ
R10	117-1031-10	1/10W 10kΩ
R11	117-1011-10	1/10W 100Ω
R12	117-1031-10	1/10W 10kΩ
R13	117-4731-10	1/10W 47kΩ
R15	117-4741-10	1/10W 470kΩ
R17	117-3331-10	1/10W 33kΩ
R19	117-3321-10	1/10W 3.3kΩ
R20	117-1031-10	1/10W 10kΩ
R21	117-3321-10	1/10W 3.3kΩ
R22	117-3321-10	1/10W 3.3kΩ
R23	117-3321-10	1/10W 3.3kΩ
R24	117-3321-10	1/10W 3.3kΩ
R26	117-1041-10	1/10W 100kΩ
R27	117-4711-10	1/10W 470Ω
R29	117-2211-10	1/10W 220Ω
R31	117-2201-10	1/10W 22Ω
R32	117-2201-10	1/10W 22Ω
R33	117-2201-10	1/10W 22Ω
R34	117-2201-10	1/10W 22Ω
R40	117-3321-10	1/10W 3.3kΩ
R41	117-1211-10	1/10W 120Ω
R42	117-2201-10	1/10W 22Ω
S1	013-3989-00	SPPB63
X1	061-3500-90	16.920MHz

LCD PWB(B4) section

REF No.	PART No.	DESCRIPTION
C701	178-1055-79	1 μF
C702	168-1045-06	0.1 μF
C703	168-1032-05	0.01 μF
C704	178-1055-79	1 μF
C705	168-1022-05	1000pF
C706	168-1022-05	1000pF
C707	168-1022-05	1000pF
C708	178-1055-79	1 μF
C709	168-1045-06	0.1 μF
C710	163-2273-25	10V 220 μF
C711	042-0397-05	6.3V3.3 μF
C712	178-1055-79	1 μF
C713	163-1063-50	35V10 μF
C714	168-2235-06	0.022 μF
C715	163-1063-30	16V10 μF
C716	166-5601-00	56pF CH
C717	168-2222-05	2200pF
C718	168-1032-05	0.01 μF
C719	042-0416-02	10V10 μF
C720	168-1022-05	1000pF
C721	178-4745-79	0.47 μF
C722	178-4745-79	0.47 μF
C723	178-4745-79	0.47 μF
C724	168-1032-05	0.01 μF
C725	163-3363-40	25V33 μF
C726	163-1053-60	50V1 μF
C727	168-1032-05	0.01 μF
C728	168-8212-05	820pF
C729	166-3301-00	33pF CH
C730	168-1032-05	0.01 μF
C731	168-1045-06	0.1 μF
C732	168-1032-05	0.01 μF

REF No.	PART No.	DESCRIPTION
C733	178-4732-78	0.047 μF
C734	178-1055-79	1 μF
C735	168-1032-05	0.01 μF
C736	178-1055-79	1 μF
C737	168-1032-05	0.01 μF
C738	042-0528-00	35V15 μF
C739	042-0528-00	35V15 μF
C740	163-2273-25	10V 220 μF
C741	042-0528-00	35V15 μF
C743	168-1032-05	0.01 μF
C744	178-1055-79	1 μF
C745	178-1055-79	1 μF
C746	178-1055-79	1 μF
C747	163-4763-30	16V47 μF
C748	178-1055-79	1 μF
C749	163-3363-40	25V33 μF
C750	163-4763-30	16V47 μF
C751	163-1073-10	6.3V100 μF
C752	178-4742-78	0.47 μF
C753	168-1032-05	0.01 μF
C754	166-8097-00	8pF CH
C755	168-1045-06	0.1 μF
C756	168-1045-06	0.1 μF
C757	168-1045-06	0.1 μF
C758	168-1045-06	0.1 μF
C759	168-1045-06	0.1 μF
C760	168-1045-06	0.1 μF
C761	168-1045-06	0.1 μF
C762	163-1063-30	16V10 μF
C763	168-1045-06	0.1 μF
C764	178-1055-79	1 μF
C765	163-1063-30	16V10 μF

REF No.	PART No.	DESCRIPTION
C766	163-1063-30	16V10 μF
C767	168-1045-06	0.1 μF
C768	178-1055-79	1 μF
C769	168-1045-06	0.1 μF
C770	168-1045-06	0.1 μF
C771	168-5612-05	560pF
C772	178-1042-78	0.1 μF
C773	168-1045-06	0.1 μF
C774	168-1045-06	0.1 μF
C775	178-1055-79	1 μF
C776	166-4711-00	470pF CH
C777	166-3301-00	33pF CH
C778	163-1063-30	16V10 μF
C779	166-3301-00	33pF CH
C780	168-1022-05	1000pF
C781	168-1045-06	0.1 μF
C782	168-1045-06	0.1 μF
C783	166-8201-50	82pF
C784	178-2242-78	0.22 μF
C785	168-1022-05	1000pF
C786	166-1011-00	100pF CH
C787	166-3911-50	390pF
C788	166-2211-00	220pF
C789	168-1045-06	0.1 μF
C790	168-1045-06	0.1 μF
C791	168-1045-06	0.1 μF
C792	163-1063-30	16V10 μF
C794	163-1063-30	16V10 μF
C795	163-2263-50	35V22 μF
C796	168-1045-06	0.1 μF
C798	168-1045-06	0.1 μF
C799	168-1045-06	0.1 μF

REF No.	PART No.	DESCRIPTION
C801	178-5642-78	0.56 μF
C802	178-1045-79	0.1 μF
C803	178-1055-79	1 μF
C804	176-2701-00	27pF CH
C805	178-1045-79	0.1 μF
C806	176-1011-00	100pF CH
C807	176-1011-00	100pF CH
C808	176-1011-00	100pF CH
C809	176-1011-00	100pF CH
C1700	168-1045-06	0.1 μF
C1701	163-1063-30	16V10 μF
C1702	178-1032-78	0.01 μF
C1703	178-1055-79	1 μF
C1704	178-1052-78	1 μF
CCT702	050-0122-58	470Ω×4
CCT703	050-0122-58	470Ω×4
CCT704	050-0122-58	470Ω×4
CCT705	050-0122-60	33Ω×4
CCT707	050-0122-60	33Ω×4
D701	001-0516-00	MA111
D702	001-0516-00	MA111
D703	001-0516-00	MA111
D704	001-2606-90	M1FS4
D705	001-2606-90	M1FS4
D706	001-0516-00	MA111
D707	001-0354-00	MA151WK
D708	001-3211-90	MA335-TX
D709	001-0367-00	1SS226
D710	001-0528-29	MA8051-M
D711	001-2606-90	M1FS4
D712	001-2606-90	M1FS4
D713	001-0516-00	MA111
D801	001-0528-32	MA8056-M
D802	001-0528-18	MA8036-L
D803	001-0528-18	MA8036-L
D804	001-0528-18	MA8036-L
D805	001-0528-18	MA8036-L
D806	001-0528-18	MA8036-L
IC701	051-5306-90	MM1117XF
IC702	051-6435-08	M62354FP-70ND
IC703	051-3913-90	NJM2368E
IC704	051-5313-10	IR3Y29BM
IC706	051-1292-00	NJM4565M-D
IC707	051-6035-01	LZ9GH22
IC708	051-3025-90	NJM2107F
IC801	051-1250-00	TC4S66F
IC802	052-7038-08	μPD6604GS
IR801	060-4008-00	RS171
J701	074-1179-74	24P
J702	074-1189-45	45P
J801	074-1205-45	45P
J802	074-1189-32	32P
J803	074-1201-09	9P
L701	010-3057-90	100 μH
L702	010-2199-83	56 μH J
L703	010-2199-86	100 μH J
L704	010-2174-24	100 μH
L705	010-3057-90	100 μH
L706	010-2199-30	33 μH J
L707	010-2199-74	10 μH J
L708	010-2199-66	2.2 μH J
L709	010-2323-70	15 μH
L710	010-2323-59	2.7 μH
L711	010-2199-86	100 μH J
Q701	100-1736-00	2SA1736
Q702	125-2004-02	RN1402
Q703	102-3326-00	2SC3326
Q704	102-2712-00	2SC2712
Q705	125-2004-02	RN1402
Q706	102-2873-00	2SC2873

REF No.	PART No.	DESCRIPTION
Q707	102-2712-00	2SC2712
Q708	100-1213-00	2SA1213
Q709	125-2004-02	RN1402
Q801	125-2004-02	RN1402
Q802	125-2004-02	RN1402
Q803	102-2712-00	2SC2712
R701	117-7501-10	1/10W 75Ω
R702	119-1031-10	1/16W 10kΩ
R703	117-3311-10	1/10W 330Ω
R704	117-3311-10	1/10W 330Ω
R705	117-3311-10	1/10W 330Ω
R706	119-4721-10	1/16W 4.7kΩ
R707	119-5621-10	1/16W 5.6kΩ
R708	119-1021-10	1/16W 1kΩ
R709	119-1021-10	1/16W 1kΩ
R710	119-3341-10	1/16W 330kΩ
R711	119-2221-10	1/16W 2.2kΩ
R712	119-2221-10	1/16W 2.2kΩ
R713	119-1001-10	1/16W 10Ω
R714	119-6841-10	1/16W 680kΩ
R715	119-3931-10	1/16W 39kΩ
R716	119-6841-10	1/16W 680kΩ
R717	119-2231-10	1/16W 22kΩ
R719	119-2431-10	1/16W 24kΩ
R720	119-3341-10	1/16W 330kΩ
R722	119-2231-10	1/16W 22kΩ
R723	119-1841-10	1/16W 180kΩ
R725	119-2731-10	1/16W 27kΩ
R726	119-2231-10	1/16W 22kΩ
R727	119-2231-10	1/16W 22kΩ
R728	032-0098-03	1/10W 18kΩ±2%
R730	119-3311-10	1/16W 330Ω
R731	119-5631-10	1/16W 56kΩ
R732	119-3931-10	1/16W 39kΩ
R734	119-5611-10	1/16W 560Ω
R739	119-1021-10	1/16W 1kΩ
R740	119-3931-10	1/16W 39kΩ
R741	119-2231-10	1/16W 22kΩ
R742	119-5621-10	1/16W 5.6kΩ
R743	119-3931-10	1/16W 39kΩ
R744	119-2231-10	1/16W 22kΩ
R745	119-4731-10	1/16W 47kΩ
R746	119-2231-10	1/16W 22kΩ
R747	119-1051-10	1/16W 1MΩ
R756	119-4731-10	1/16W 47kΩ
R757	119-2731-10	1/16W 27kΩ
R758	119-4731-10	1/16W 47kΩ
R759	119-3331-10	1/16W 33kΩ
R761	119-1011-10	1/16W 100Ω
R762	119-2221-10	1/16W 2.2kΩ
R763	119-1011-10	1/16W 100Ω
R764	119-1011-10	1/16W 100Ω
R767	119-5621-10	1/16W 5.6kΩ
R768	119-8221-10	1/16W 8.2kΩ
R769	119-1021-10	1/16W 1kΩ
R770	119-1001-10	1/16W 10Ω
R771	119-1531-10	1/16W 15kΩ
R772	119-1031-10	1/16W 10kΩ
R773	119-4721-10	1/16W 4.7kΩ
R774	119-2731-10	1/16W 27kΩ
R775	119-2221-10	1/16W 2.2kΩ
R776	119-4731-10	1/16W 47kΩ
R777	032-0092-33	1/10W 3.6kΩ±1%
R778	032-0092-18	1/10W 4.7kΩ±1%
R779	119-4731-10	1/16W 47kΩ
R780	119-6831-10	1/16W 68kΩ
R781	119-4331-15	1/16W 43kΩ
R782	119-1051-10	1/16W 1MΩ
R783	119-1051-10	1/16W 1MΩ
R784	119-6831-10	1/16W 68kΩ

REF No.	PART No.	DESCRIPTION
R785	119-2711-10	1/16W 270Ω
R786	119-2421-15	1/16W 2.4kΩ
R787	119-1031-10	1/16W 10kΩ
R788	119-4731-10	1/16W 47kΩ
R789	119-1031-10	1/16W 10kΩ
R790	119-2241-10	1/16W 220kΩ
R791	119-5641-10	1/16W 560kΩ
R792	119-5641-10	1/16W 560kΩ
R793	119-2721-10	1/16W 2.7kΩ
R794	119-3321-10	1/16W 3.3kΩ
R795	119-1011-10	1/16W 100Ω
R796	119-3311-10	1/16W 330Ω
R797	119-1001-10	1/16W 10Ω
R798	119-5121-15	1/16W 5.1kΩ
R801	117-4701-10	1/10W 47Ω
R802	117-4721-10	1/10W 4.7kΩ
R803	117-4731-10	1/10W 47kΩ
R804	117-4711-10	1/10W 470Ω
R805	032-0092-26	1/10W 51kΩ±1%
R806	117-4721-10	1/10W 4.7kΩ
R807	117-4721-10	1/10W 4.7kΩ
R808	117-4721-10	1/10W 4.7kΩ
R809	117-4721-10	1/10W 4.7kΩ
R810	117-2711-10	1/10W 270Ω
R811	117-2711-10	1/10W 270Ω
R812	117-2711-10	1/10W 270Ω
R813	117-2711-10	1/10W 270Ω
R814	117-3311-10	1/10W 330Ω
R815	117-3311-10	1/10W 330Ω
R816	117-3311-10	1/10W 330Ω
R817	117-3311-10	1/10W 330Ω
R1701	119-9121-15	1/16W 9.1kΩ
R1704	119-1031-10	1/16W 10kΩ
R1705	119-1031-10	1/16W 10kΩ
R1706	117-4721-10	1/10W 4.7kΩ
R1707	119-1031-10	1/16W 10kΩ
R1708	117-3321-10	1/10W 3.3kΩ
R1709	117-6821-10	1/10W 6.8kΩ
R1710	117-2221-10	1/10W 2.2kΩ
R1711	117-2221-10	1/10W 2.2kΩ
R1712	117-3331-10	1/10W 33kΩ
R1713	119-3301-10	1/16W 33Ω
S701	013-7204-00	SPPB64
S702	013-7204-00	SPPB64
S703	013-7204-00	SPPB64
S801	013-6514-50	LS6J2M-1FG
S802	013-6514-50	LS6J2M-1FG
S803	013-6514-50	LS6J2M-1FG
S804	013-6514-50	LS6J2M-1FG
S805	013-6514-50	LS6J2M-1FG
S806	013-6514-50	LS6J2M-1FG
S807	013-6514-50	LS6J2M-1FG
S808	013-6514-50	LS6J2M-1FG
S809	013-6514-50	LS6J2M-1FG
S810	013-6514-50	LS6J2M-1FG
S811	013-9901-00	SKQUAA
T701	007-1159-90	TRANS CEI120
TM701	073-0762-90	TERMINAL
VR701	012-5123-02	1kΩ
VR702	012-5123-08	33kΩ
VR703	012-5123-08	33kΩ
VR704	012-5123-08	33kΩ
VR705	012-5123-08	33kΩ
VR706	012-5123-08	33kΩ
VR707	012-5123-06	10kΩ
VR708	012-5123-06	10kΩ
VR709	012-5123-60	100kΩ
X701	061-1078-00	3.579545MHz

PRINTED WIRING BOARD

CD Drive PWB (B3) section

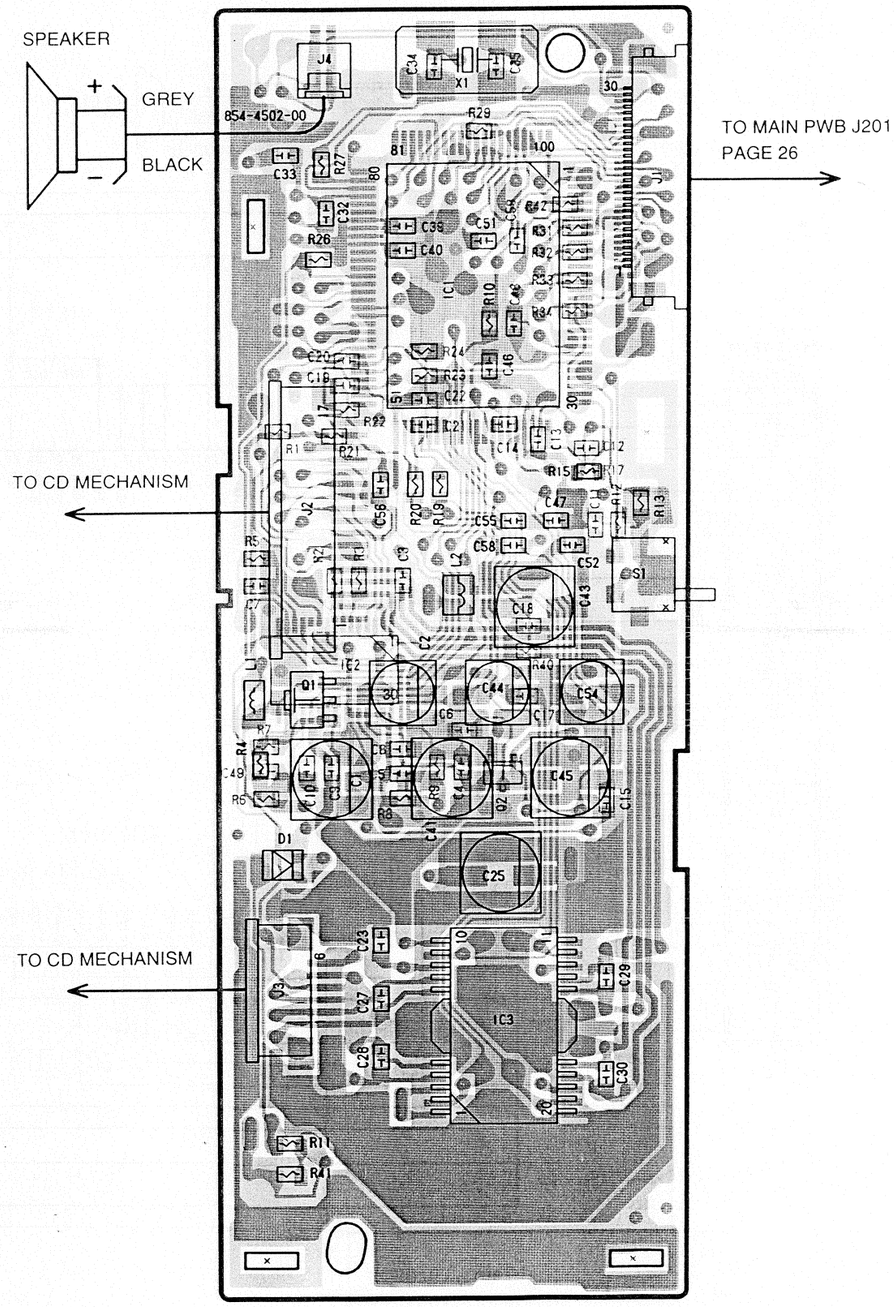

■CIRCUIT DIAGRAM

CD drive PWB(B3) section

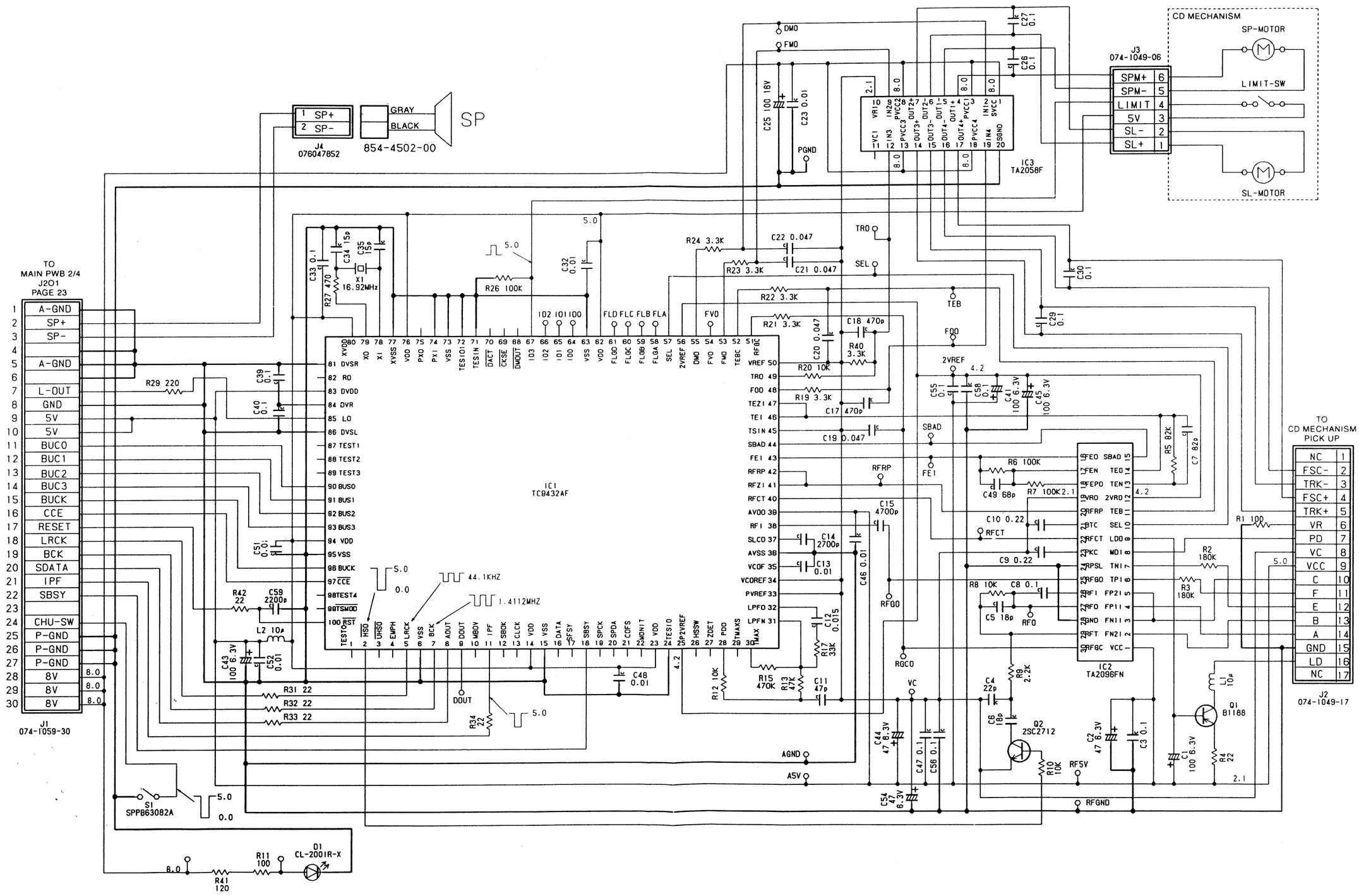

NVS613

LCD PWB(B4)1/2 · Inverter PWB(B2) sectoin

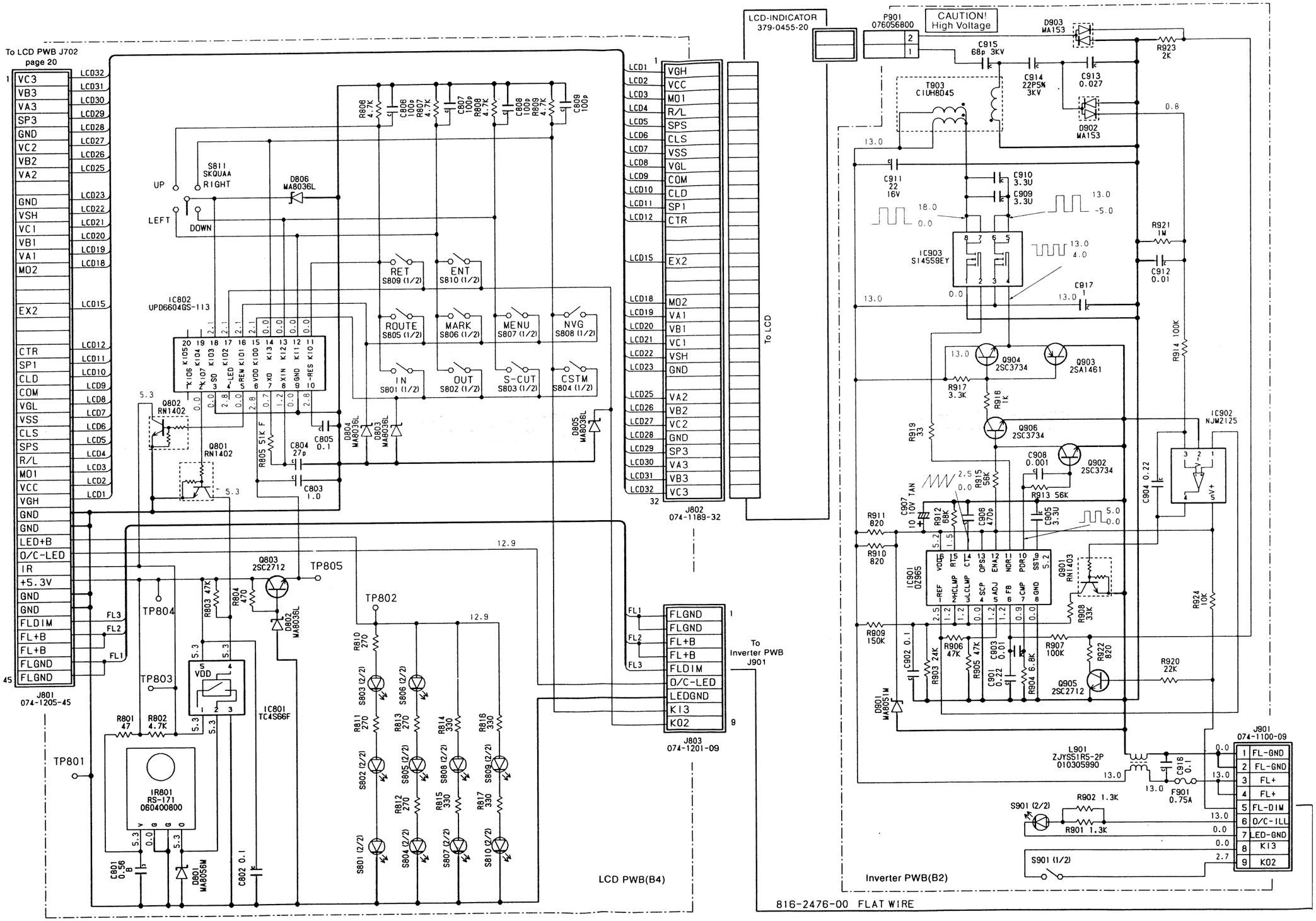

NVS613

LCD PWB (B2) 2/2 section

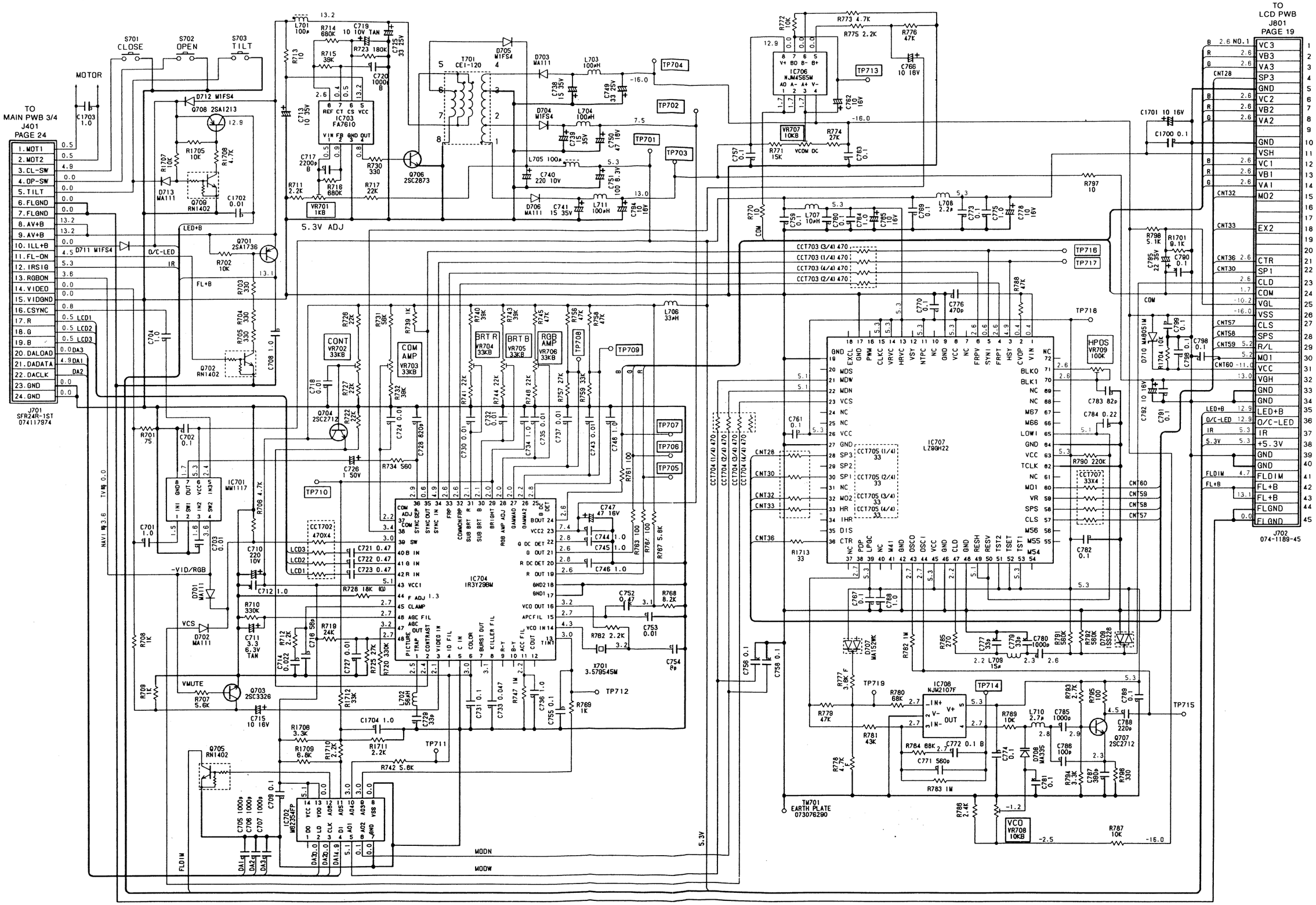

PRINTED WIRING BOARD

LCD PWB (B2) · Inverter PWB (B4) section

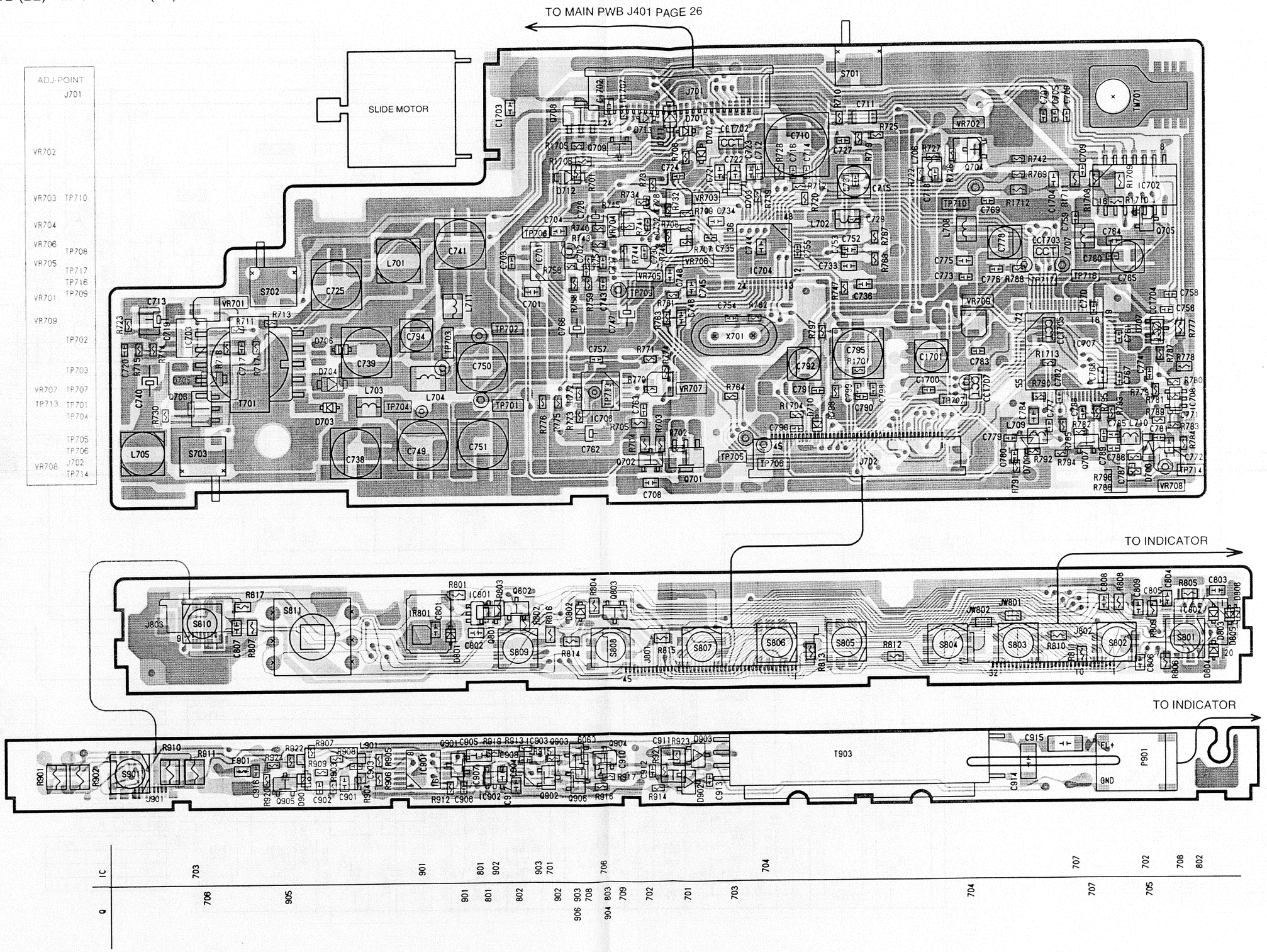

NVS613

■CIRCUIT DIAGRAM

Main PWB (BI)1/4 section

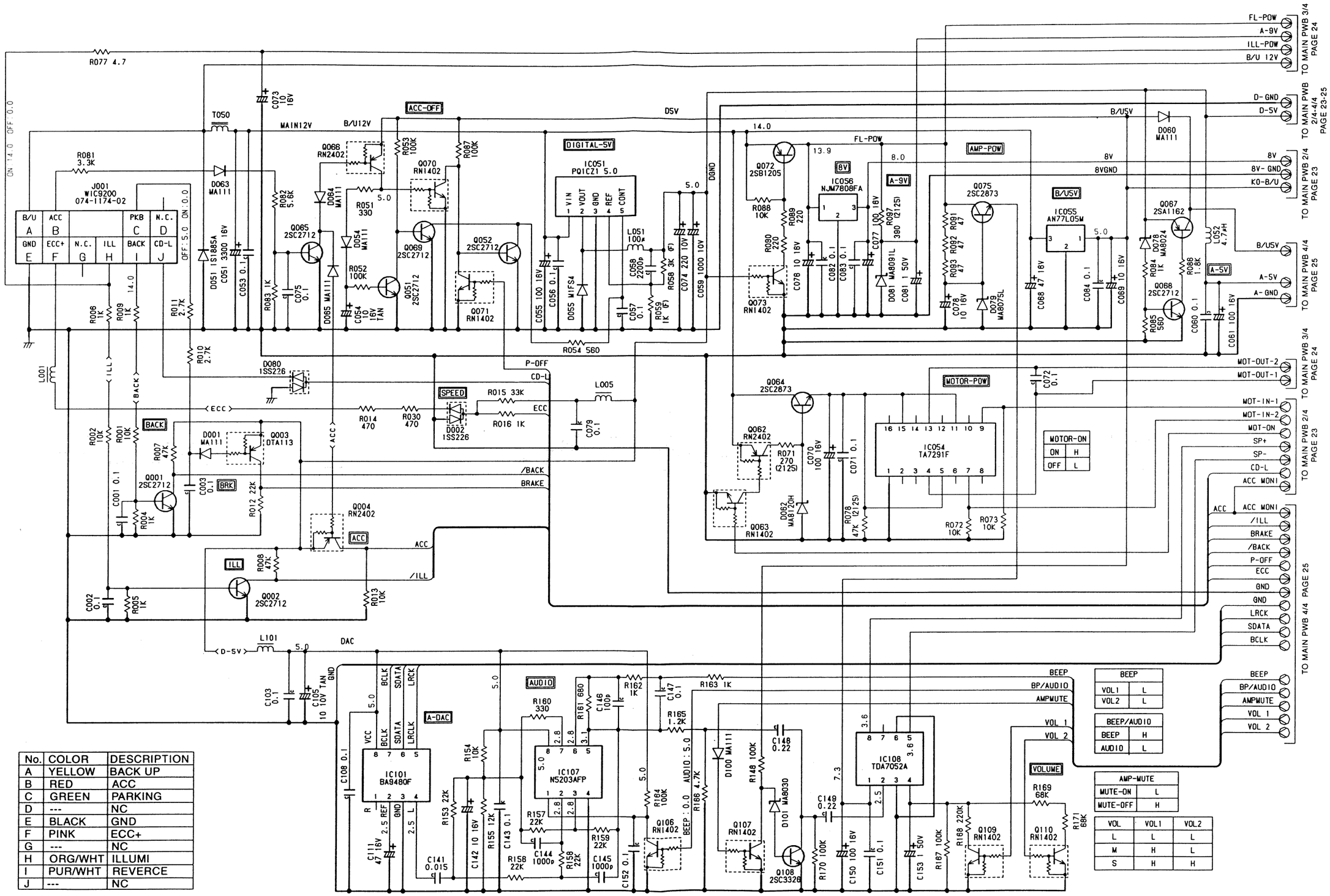

No.	COLOR	DESCRIPTION
A	YELLOW	BACK UP
B	RED	ACC
C	GREEN	PARKING
D	---	NC
E	BLACK	GND
F	PINK	ECC+
G	---	NC
H	ORG/WHT	ILLUMI
I	PUR/WHT	REVERCE
J	---	NC

NVS613

Main PWB (B1) 2/4 section

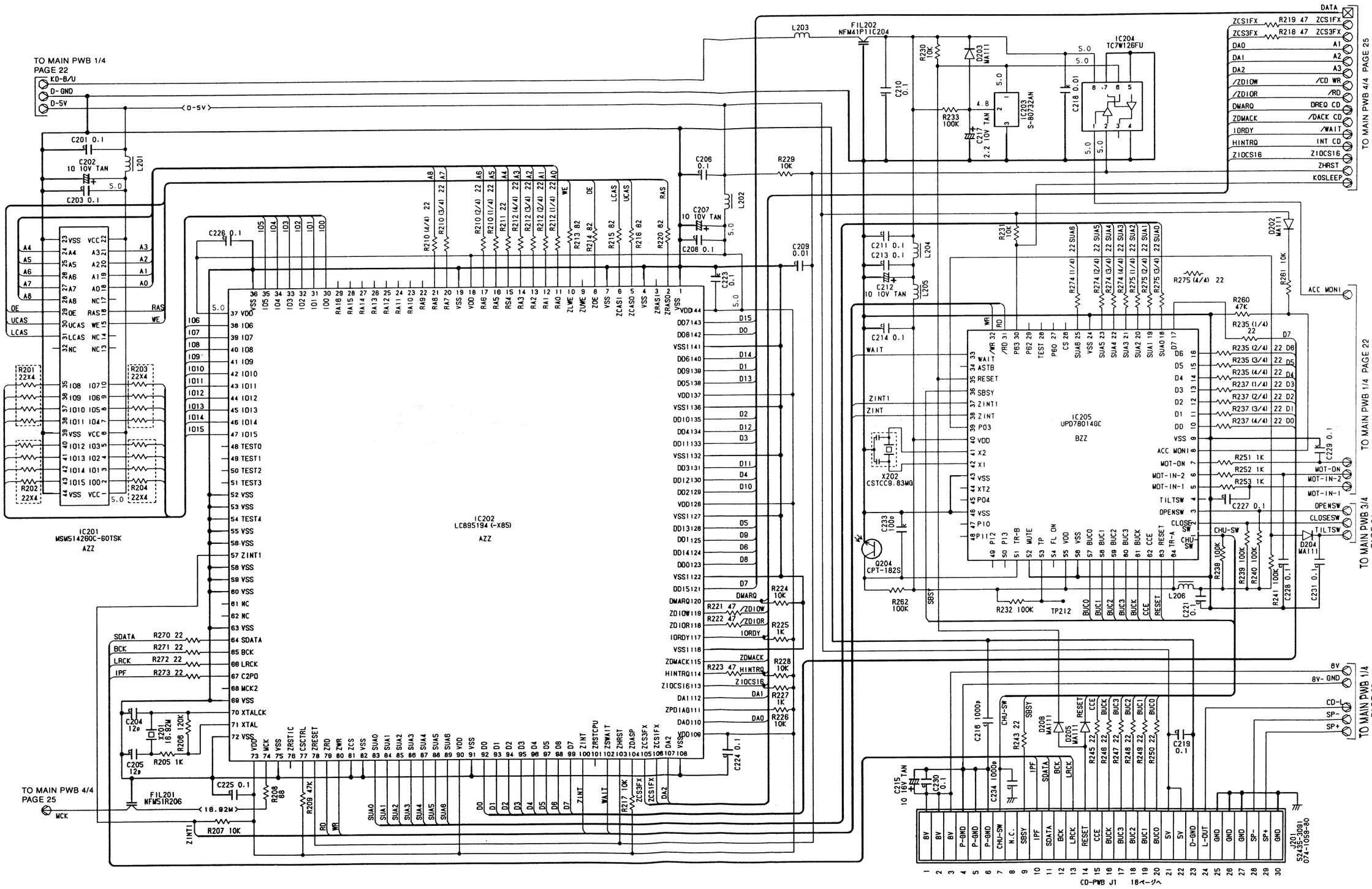

NVS613

Main PWB (B1) 3/4 section

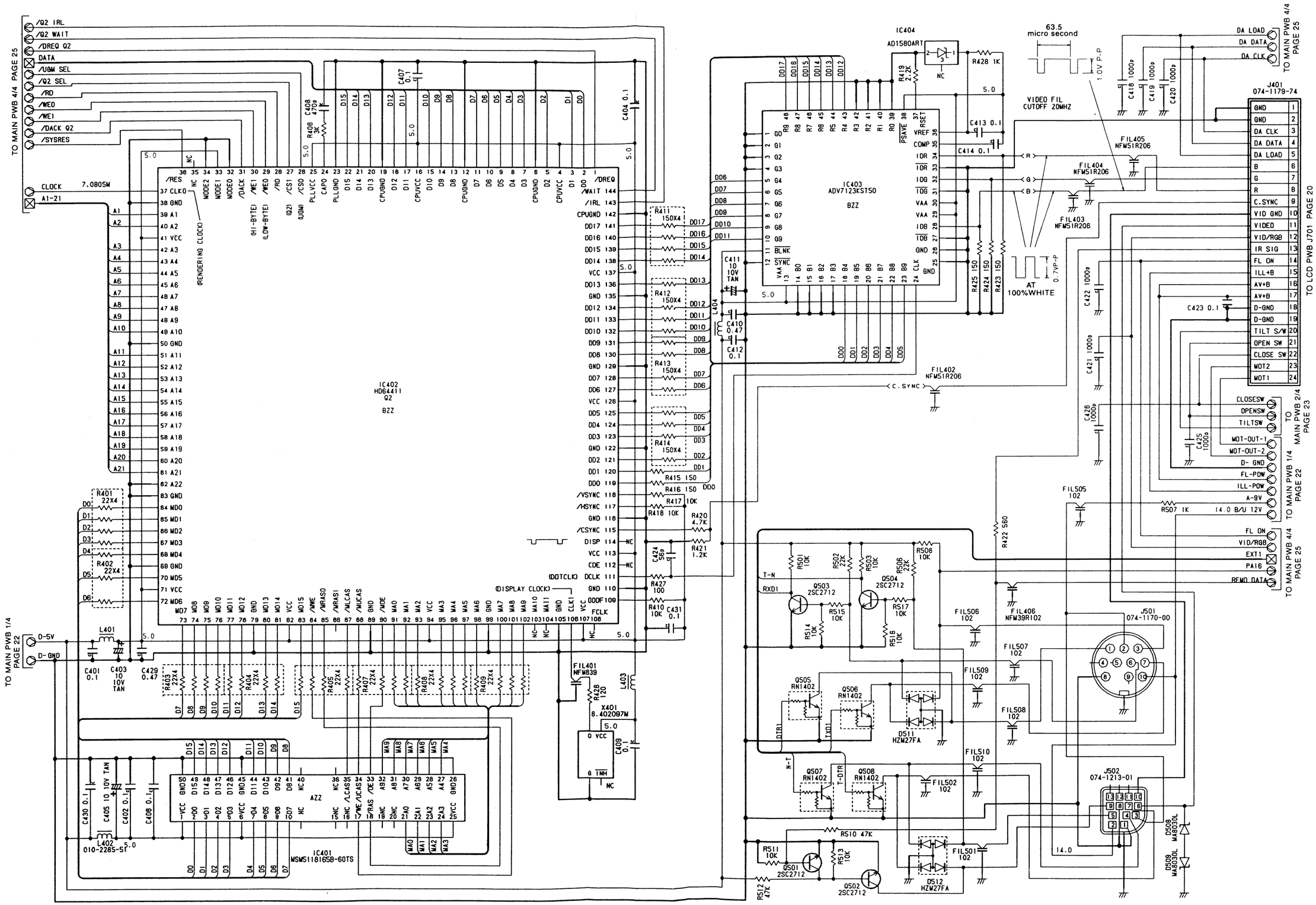

NVS613

Main PWB (B1) 4/4 section

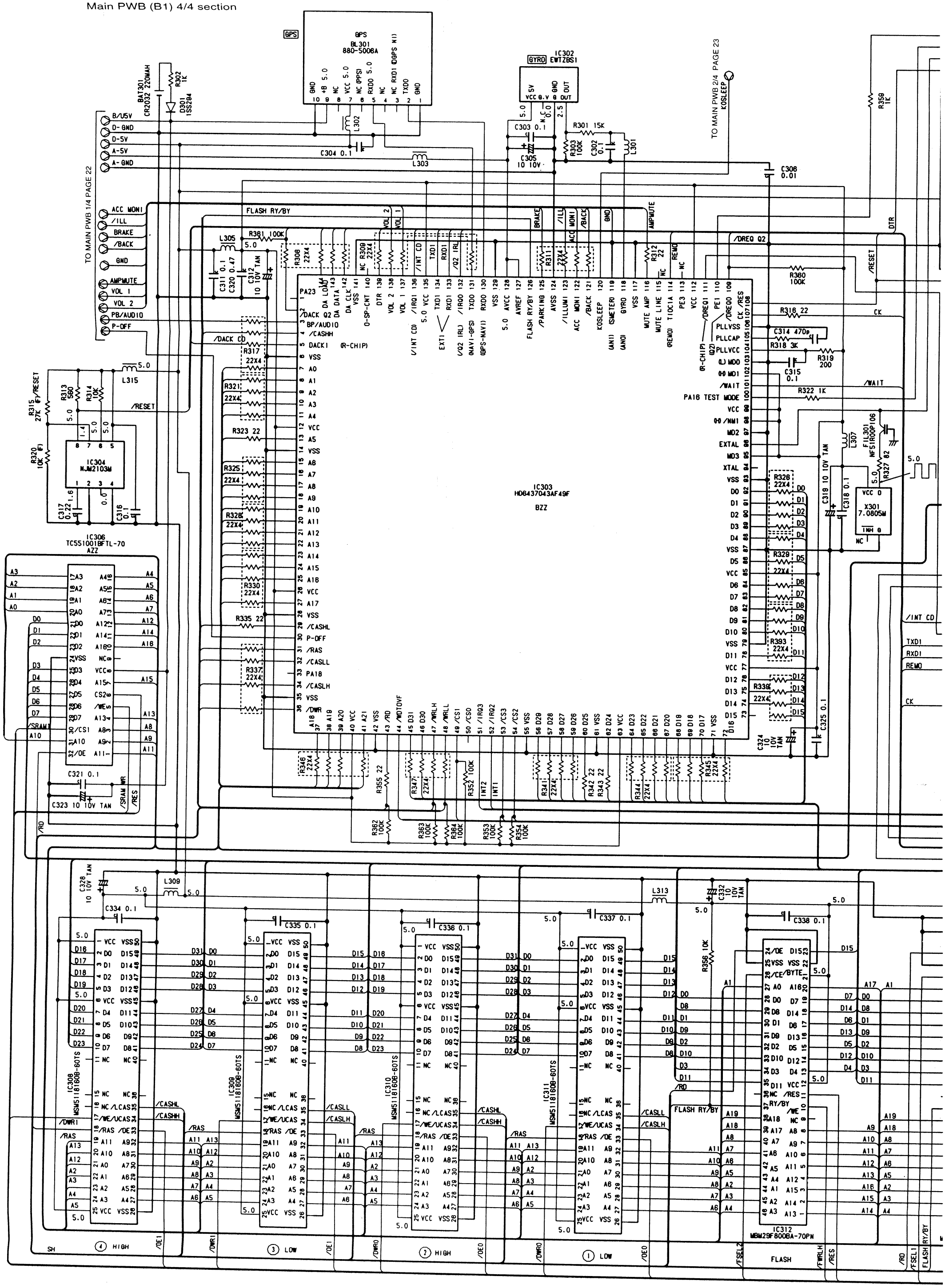

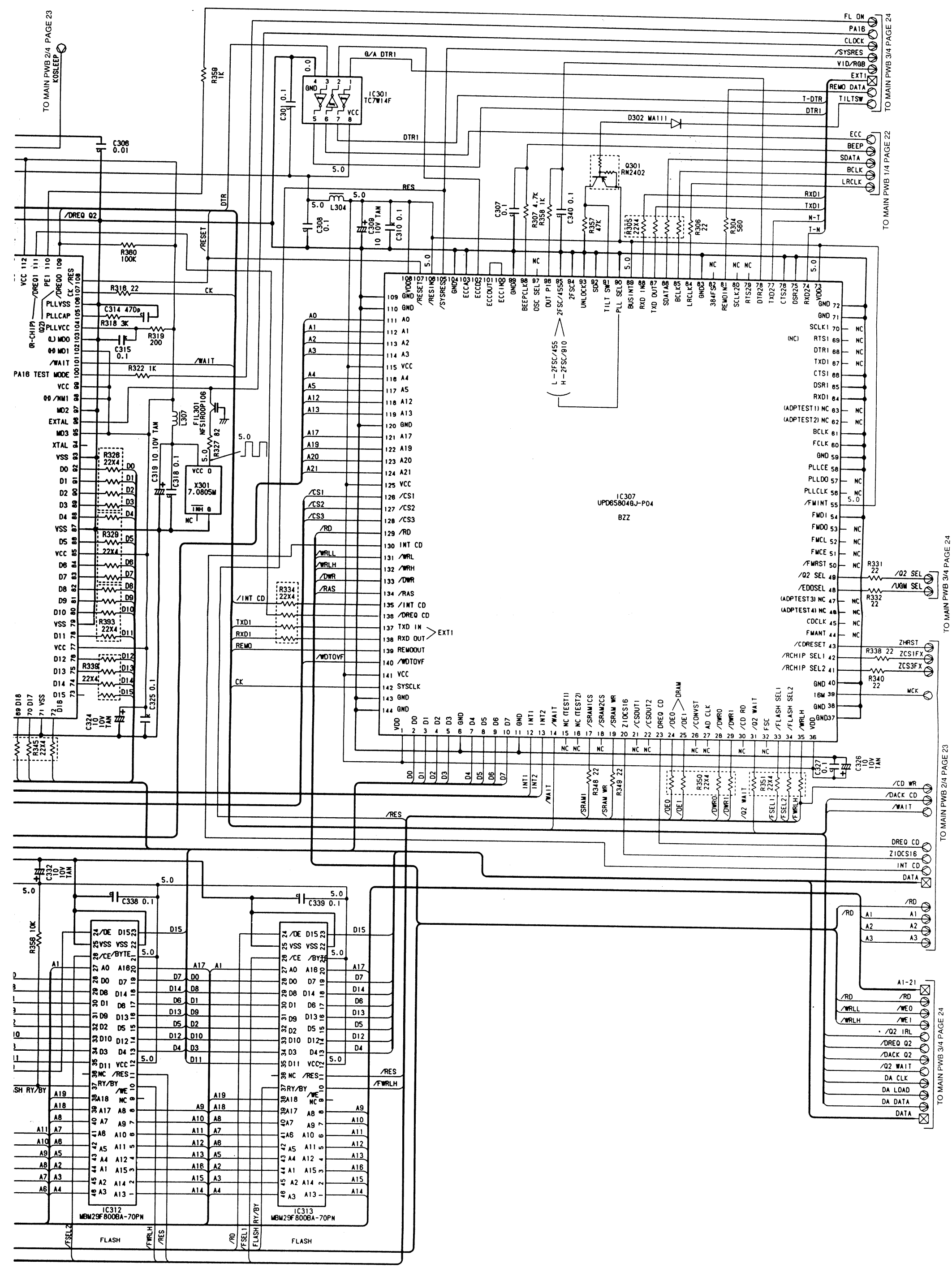
TO MAIN PWB 2/4 PAGE 23
TO MAIN PWB 3/4 PAGE 24
TO MAIN PWB 1/4 PAGE 22
TO MAIN PWB 3/4 PAGE 24
TO MAIN PWB 2/4 PAGE 23
TO MAIN PWB 3/4 PAGE 24
IC301 TC7W14F
IC307 UPD65804GJ-P04
BZZ
IC312 MBM29F800BA-70PN
IC313 MBM29F800BA-70PN
FLASH
FLASH
X301 7.0805M
Q301 RN2402
D302 MA111
L304
L307
FIL301 NFS1R00P106
EXT1
EXT1
FL ON
PA16
CLOCK
/SYSRES
VID/RGB
EXT1
REMO DATA
TILTSW
T-DTR
DTR1
ECC
BEEP
SDATA
BCLK
LRCLK
RXD1
TXD1
N-T
T-N
/Q2 SEL
/UGM SEL
ZHRST
ZCS1FX
ZCS3FX
MCK
/CD WR
/DACK CD
/WAIT
DREQ CD
ZIOCS16
INT CD
DATA
/RD
A1
A2
A3
A1-21
/RD
/WRLL
/WRLH
/WE0
/WE1
/Q2 IRL
/DREQ Q2
/DACK Q2
/Q2 WAIT
DA CLK
DA LOAD
DA DATA
DATA

NVS613

■ PRINTED WIRING BOARD

Main PWB (B1) section

Q	IC
073 075	
	056
	403
072	
063 062	
002	401
	404
	402
001	
	201
	054
065	055
067	
003	
066	
068	
004	304
	301
051 070	
071	
052 069	202
	051
	307
	303
301	
	204
	203
	302
	205
	312
	308
	309
	310
	311
	306
	313
505	
503	
506	
107 504	
110 109	
106	108
501 502	
108	
508 507	101
	107

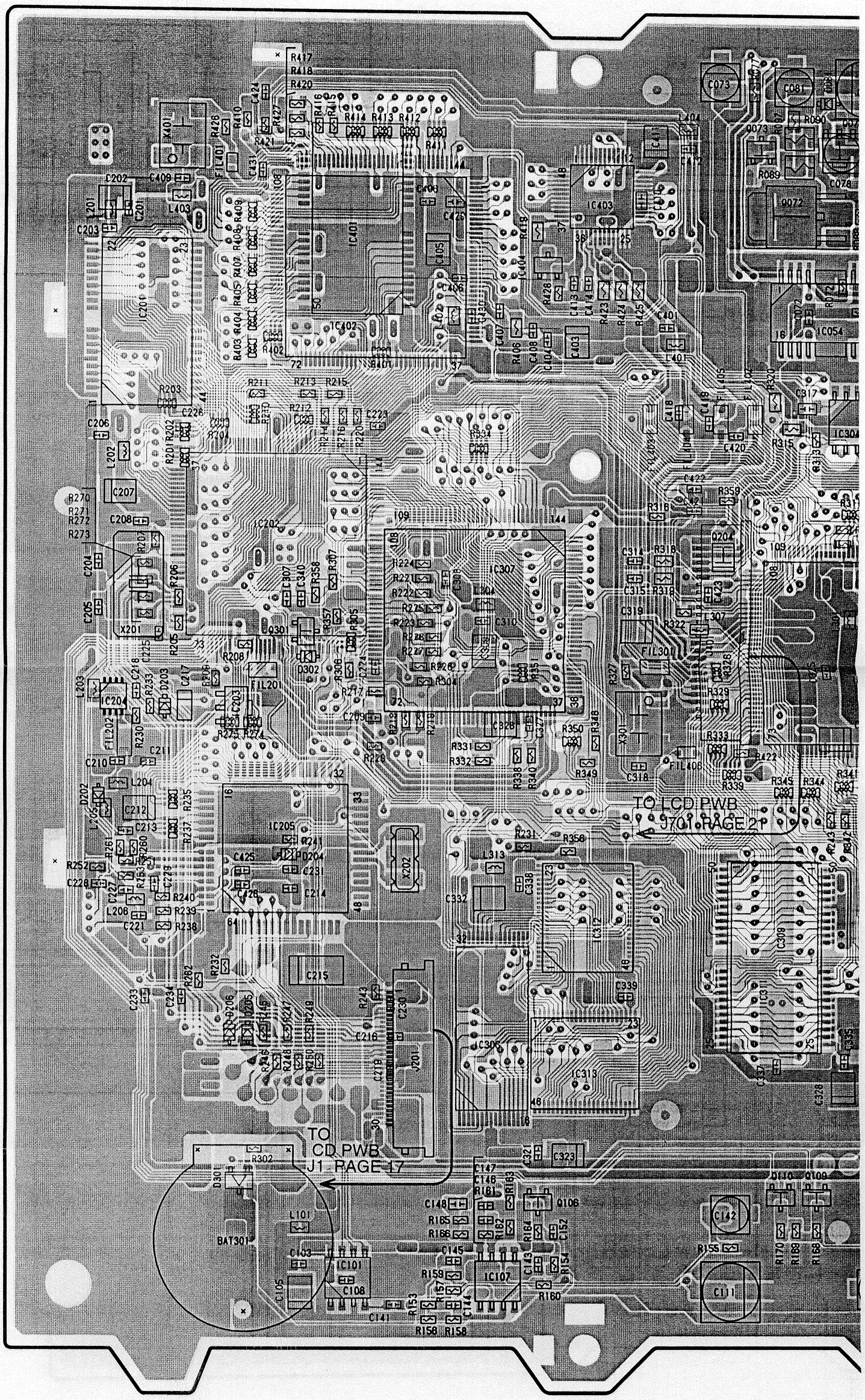

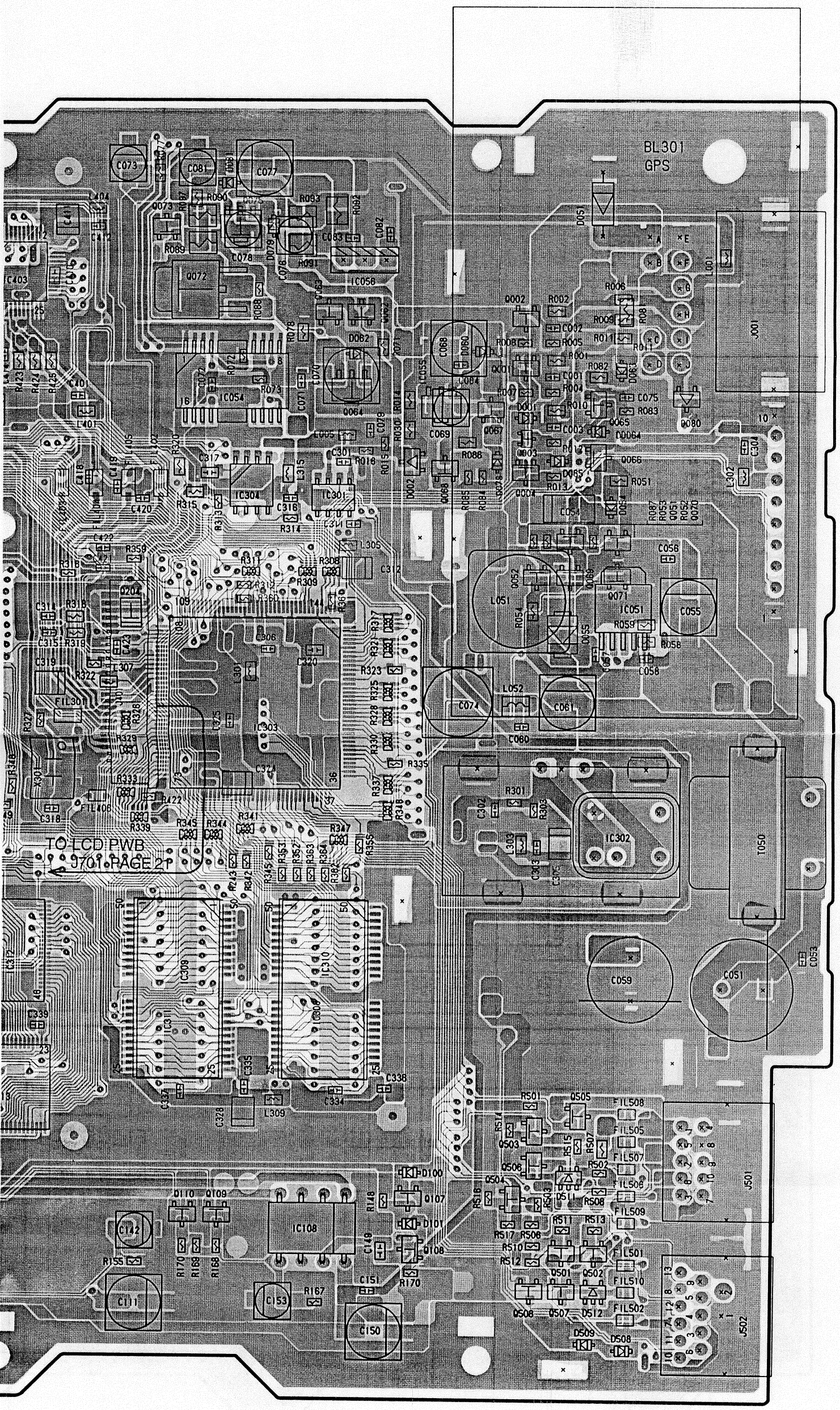

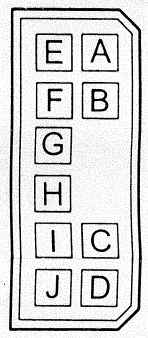

Pin No.	Color	Description
A	YELLOW	BACK UP
B	RED	ACC
C	GREEN	PARKING
D	---	NC
E	BLACK	GND
F	PINK	ECC+
G	---	NC
H	ORG/WHT	ILLUMI
I	PUR/WHT	REVERCE
J	---	NC