ALPINE

ALPI-00497

SERVICE MANUAL

FM/MW/LW/RDS Cassette Receiver

CD Shuttle Controller

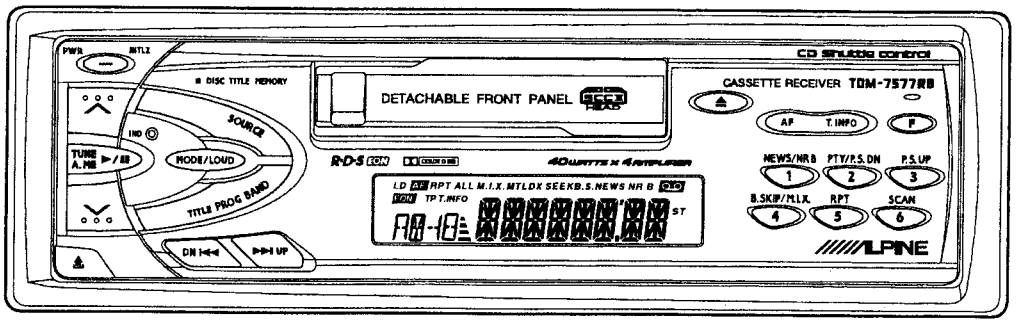

(TDM-7577RB)

TDM-7577RB/TDM-7576R/ TDM-7575RB/TDM-7574R/ TDM-7574RM

Contents

Packing Assembly Parts List 3
Packing Method View 3
Specifications 4, 5
Adjustment Procedures ..... 6~9
Adjustment Locations 10
Block Diagram 11
Parts Layout on P.W.Boards and Wiring Diagram ..... 12~23
Schematic Diagram ..... 24~33
Terminal Voltage of IC/TR ..... 34~36
Description of IC Terminal ..... 37~39
Electrical Parts List ..... 40~50
Cabinet Assembly Parts List 51
Exploded View (Cabinet) 52, 53
Exploded View (Cassette Deck Mechanism) (GR75S25B) 54, 55
(TDM-7577RB/TDM-7576R Model Only)
Cassette Deck Mechanism Assembly Parts List 56
(TDM-7577RB/TDM-7576R Model Only)
Cassette Deck Mechanism Assembly Parts List 57
(TDM-7575RB/TDM-7574R/TDM-7574RM Model Only)
Exploded View (Cassette Deck Mechanism) (GR75S450) 58, 59
(TDM-7575RB/TDM-7574R/TDM-7574RM Model Only)

NOTE : Due to continuing product improvement, specifications and designs are subject to change without notice.

Packing Assembly Parts List

Symbol No.	Part No.	Description
○ 101	01T00716K02	Assy., Remocon
● 101	01T00716K02	Assy., Remocon
102	15D00248K01	Case, Inner
103	15D10867Y01	Carrying, Case
104	68P00149K46	Owner's Manual
105-1	01T15394Y02	Antenna, JASO-ISO
105-2	03S72235F13	Screw, MCH (M5X8)
105-3	03A11112W01	Bolt, Hex. (M5)
105-4	36A11113W01	Cap, Rubber
105-5	01E27452S01	Assy., Power Wire (For Battery Line (Fuse 15A))
○ 105-6	60T55630W01	Battery, MGN R03 (NB) UM-4
● 105-6	60T55630W01	Battery, MGN R03 (NB) UM-4

NOTE : ○: For TDM-7577RB Model Only, ●: For TDM-7576R Model Only, Others : Common.

Packing Method View

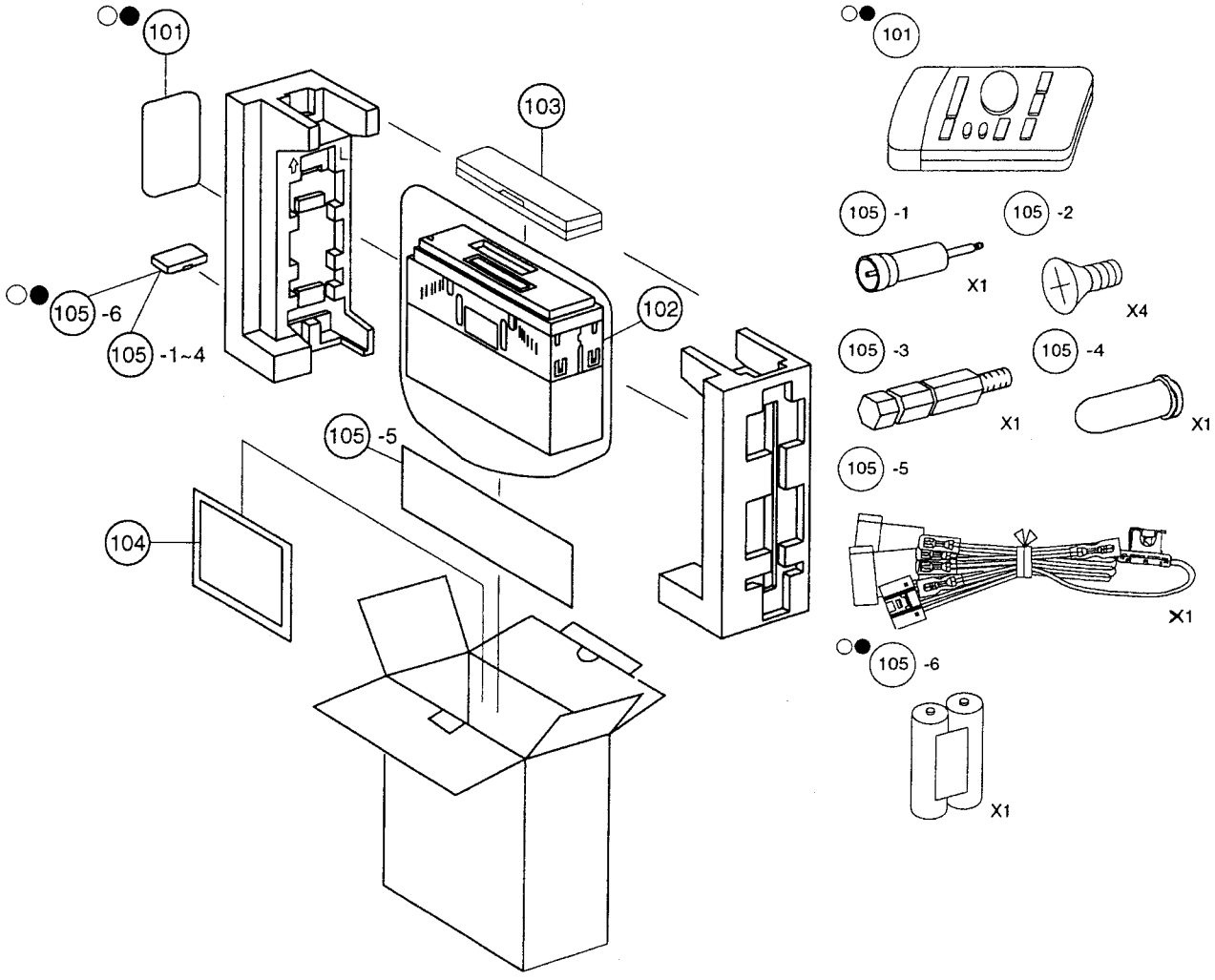

NOTE : ○ : For TDM-7577RB Model Only, ● : For TDM-7576R Model Only, Others : Common.

TDM-7577RB/TDM-7576R/TDM-7575RB/ TDM-7574R/TDM-7574RM

Specifications

<FM RADIO>

Intermediate Frequency	10.7±0.1MHz
Frequency Range	87.5~108MHz
Usable Sensitivity (Mono, 30dB S/N, at 98.1MHz)	17.2dBf
-3dB Limiting Sensitivity (at 98.1MHz)	19.2dBf
Residual Noise (Ref. 400Hz, at 98.1MHz)	25±10dB
S/N Ratio (Stereo, at 98.1MHz)	50dB
Image Rejection (at 106.1MHz)	40dB
IF Rejection (at 90.1MHz)	60dB
Distortion (Input 60dB μ, at 98.1MHz)	1%
Frequency Response (Ref. 400Hz, at 98.1MHz)	100Hz : 0±3dB
	10kHz : -12±3dB
Stereo Separation (1kHz, at 98.1MHz)	20dB
PS Sensitivity (at 98.1MHz)	36.2dBf

<MW RADIO>

Intermediate Frequency	450kHz
Frequency Range	531~1,602kHz
Usable Sensitivity (20dB S/N, at 999kHz)	35dB
S/N Ratio (at 999kHz)	44dB
Image Rejection (at 603kHz)	40dB
IF Rejection (at 603kHz)	40dB
Distortion (at 999kHz)	1.5%
Frequency Response (Ref. 400Hz, at 999kHz)	100Hz : -3±4dB
	4kHz : -12+6, -12dB

<LW RADIO>

Intermediate Frequency	450kHz
Frequency Range	153~281kHz
Usable Sensitivity (20dB S/N, at 216kHz)	41dB
S/N Ratio (at 216kHz)	42dB
Image Rejection (at 270kHz)	40dB
IF Rejection (at 162kHz)	50dB
Distortion (at 216kHz)	1.5%
Frequency Response (Ref. 400Hz, at 216kHz)	100Hz : -3±4dB
	4kHz : -12+6, -12dB

<TAPE PLAYER>

Wow & Flutter (JIS, WRMS/MTT-111N)	0.2%
Tape Speed (MTT-111N)	4.76cm/sec.+3 to -1%
S/N Ratio	Dolby OFF : 52dB
Distortion (MTT-118)	2%
Frequency Response (-3dB)	250Hz~10kHz
Separation (MTT-141N)	35dB
Crosstalk (MTT-121N)	45dB

<GENERAL>

Power Supply	DC14.4V
Power Output (T.H.D. 10%) /Impedance	16W/ch/4ohm
Dimensions (W×H×D)	Chassis : 178×50×155mm
	Nose : 188×58×16.5mm
Weight	1.4kg

NOTE : Due to Continuing product improvement, specifications and designs are subject to change without notice.

Adjustment Procedures

1. FM SECTION

(1) Dummy Antenna Circuit

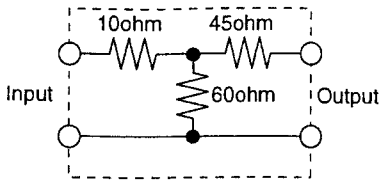

For 50 ohm FM Signal Generator

Figure 1

(2) Connections

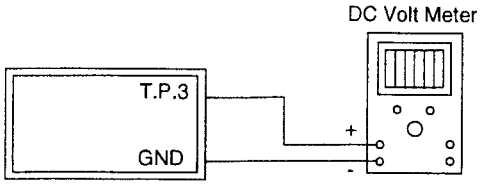

Figure 2

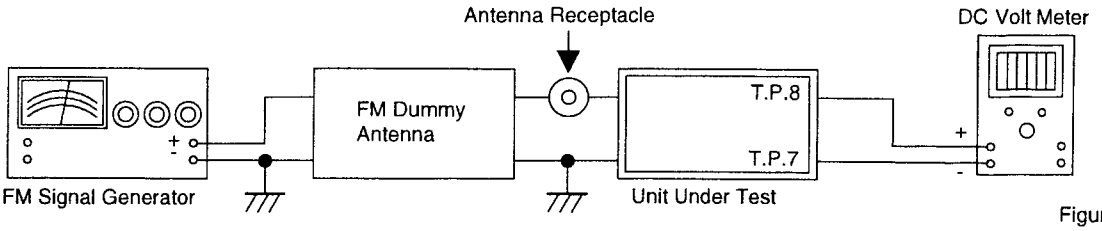

Figure 3

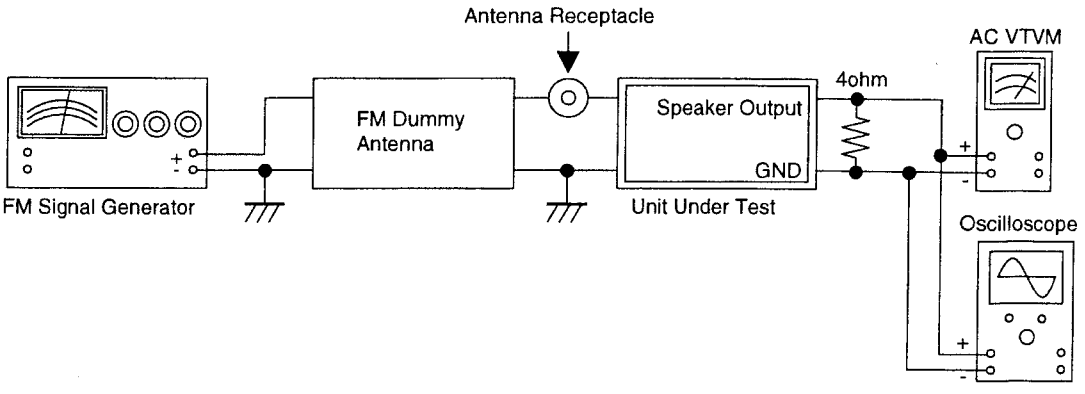

Figure 4

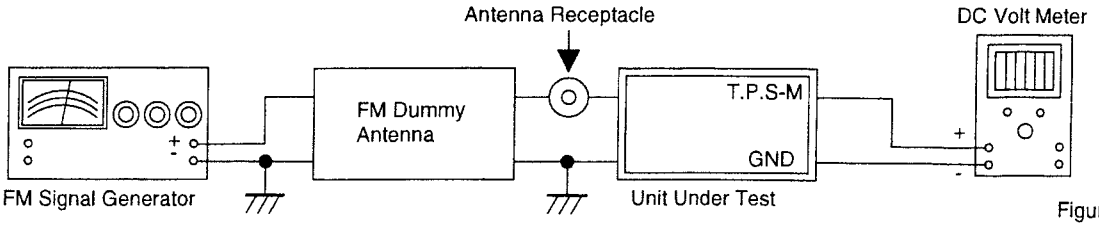

Figure 5

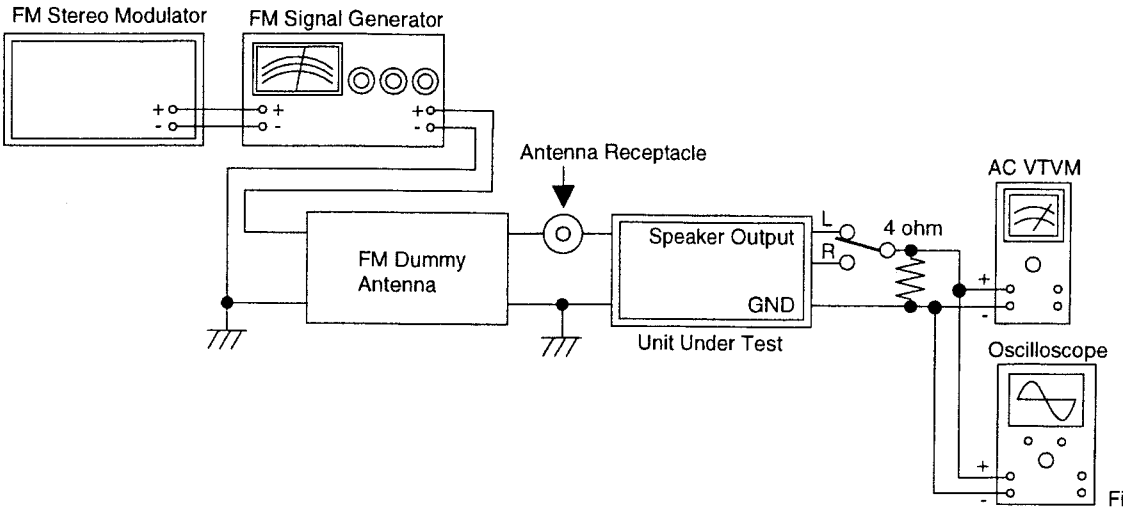

Figure 6

(3) Control Settings

Power Switch ..... ON
Fader Control ..... Center Position
Balance Control ..... Center Position
Treble/Bass Control..... Center Position
Band Switch ..... FM
Others ..... OFF

(4) Adjustment Procedures

Step	Description	Connection	Signal Generator	Dial Control	Test Point/ P.W.Board Coordinates	Adjustment
1	VT Adjustment	Figure 2	—	Max.	T.P.3 (3-A)	Adjust L006 for 7.5V.
2	IF Adjustment	Figure 3	98.1MHz, 60dBμ (Mod. 400Hz, Dev. 40kHz)	98.1MHz	T.P.7 (4-A) T.P.8 (4-A)	Adjust L101 for 0±20mV.
3	Ant. Coil Adjustment	Figure 4	90.1MHz, 20dBμ (Mod. 400Hz, Dev. 40kHz)	90.1MHz	Speaker Output	Adjust L002 for max. output.
4	RF Coil Adjustment	Figure 4	90.1MHz, 20dBμ (Mod. 400Hz, Dev. 40kHz)	90.1MHz	Speaker Output	Adjust L005 for max. output.
5	IFT Coil Adjustment	Figure 4	98.1MHz, 20dBμ (Mod. 400Hz, Dev. 40kHz)	98.1MHz	Speaker Output	Adjust T001 for max. output.
6	Signal Meter Adjustment	Figure 5	98.1MHz, 34dBμ (Mod. 400Hz, Dev. 40kHz)	98.1MHz	T.P.S-M (4-A)	Adjust VR101 to 3.5V.
7	Stereo Blend Adjustment (Lch)	Figure 6	98.1MHz, 34dBμ (Mod. 1kHz, Dev. 40kHz, Stereo, Lch Only)	98.1MHz	Speaker Output	Adjust VR102 for Lch and Rch output level difference to be 8dB.
8	Stereo Blend Adjustment (Rch)	Figure 6	98.1MHz, 34dBμ (Mod. 1kHz, Dev. 40kHz, Stereo, Rch Only)	98.1MHz	Speaker Output	Proceed same adjustment under step 7.

2. MW/LW SECTION

(1) Dummy Antenna Circuit

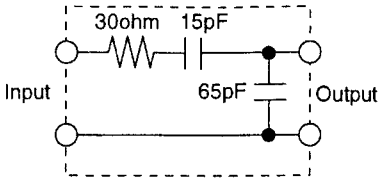

Figure 7

(2) Connections

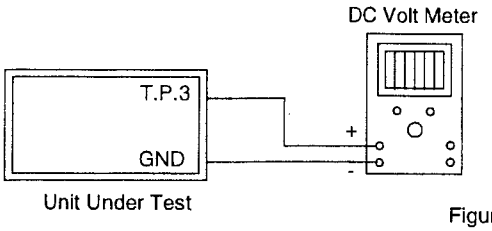

Figure 8

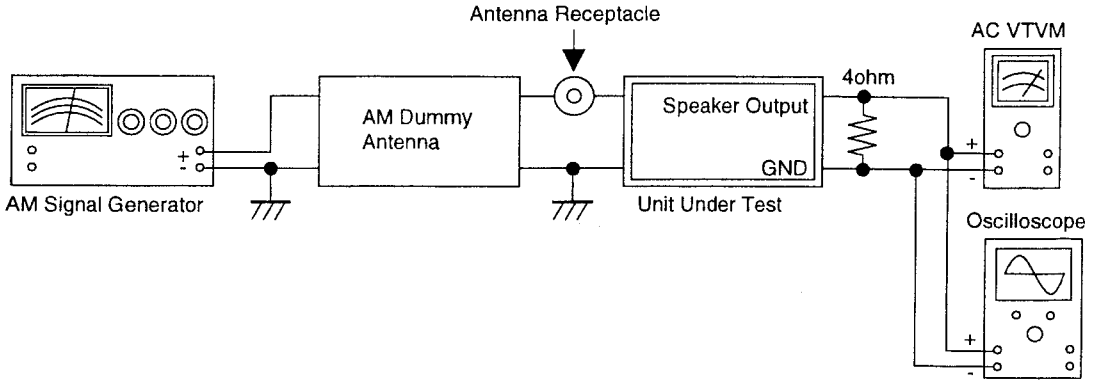

Figure 9

(3) Control Settings

Power Switch	ON	Treble/Bass Control	Center Position
Fader Control	Center Position	Band Switch	MW/LW
Balance Control	Center Position	Others	OFF

(4) Adjustment Procedures

Step	Description	Connection	Signal Generator	Dial Control	Test Point/ P.W.Board Coordinates	Adjustment
1	VT Adjustment	Figure 8	—	LW f. Max.	T.P.3 (3-A)	Adjust L204 for 7.5V.
2	LW RF Coil Adjustment	Figure 9	162kHz, 30dBμ (Mod. 400Hz, 30%)	162kHz	Speaker Output	Adjust L202 for max. output.
3	MW RF Coil Adjustment	Figure 9	603kHz, 30dBμ (Mod. 400Hz, 30%)	603kHz	Speaker Output	Adjust L203 for max. output.
4	IFT Coil Adjustment	Figure 9	999kHz, 40dBμ (Mod. 400Hz, 30%)	999kHz	Speaker Output	Adjust T201, 202 for max. output.

3. TAPE PLAYER SECTION

(1) Connection

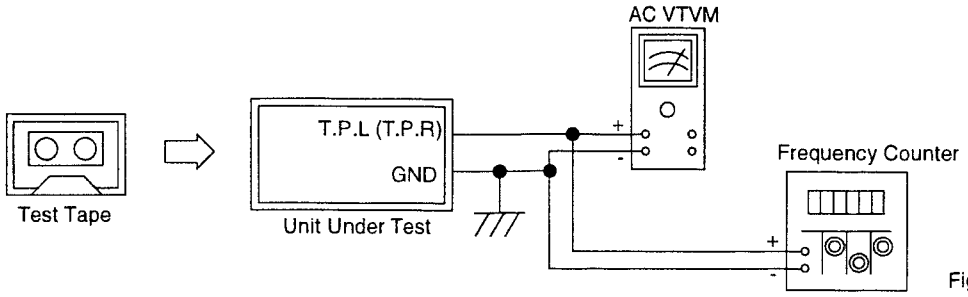

Figure 10

(2) Control Settings

Power Switch ..... ON
Fader Control ..... Center Position
Balance Control ..... Center Position
Treble/Bass Control ..... Center Position
Others ..... OFF

(3) The necessaries for adjustment
GR-S Extension Cord
Assy., EX Cord Kit for GR-S Mechanism
Part No. 01V24417S01
See Adjustment Locations (Figure 13).

(4) Adjustment Procedures

Step	Description	Test Tape	Connection	Test Point/ P.W.Board Coordinates	Adjustment Point	Adjustment
1	Head Azimuth Adjustment	MTT-114NB (14kHz)	Figure 10	T.P.L (1-C) T.P.R (1-C)	Head Azimuth Adjustment Screws (Figure 11)	Adjust for Max. and same level output at Forward and Reverse positions.
2 (○●)	Dolby Level Adjustment	MTT-150 (400Hz)	Figure 10	T.P.L (1-C) T.P.R (1-C)	VR102 (Lch) VR101 (Rch)	Adjust for 388mV at T.P.L and T.P.R.
3	Tape Speed Adjustment	MTT-111N (3kHz)	Figure 10	T.P.L (1-C) or T.P.R (1-C)	Tape Speed Adjustment (Figure 12)	Adjust for 2,970 to 3,090Hz at T.P.L (T.P.R).

NOTE: ○ : For TDM-7577RB Model Only, ● : For TDM-7576R Model Only, Others : Common.

Adjustment Locations

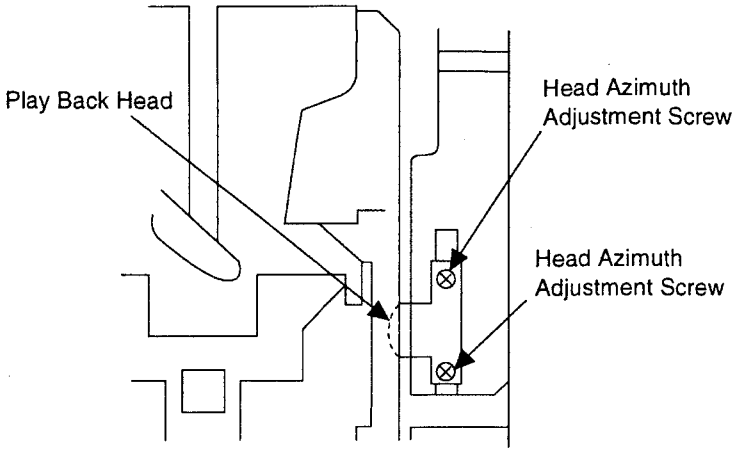

Figure 11

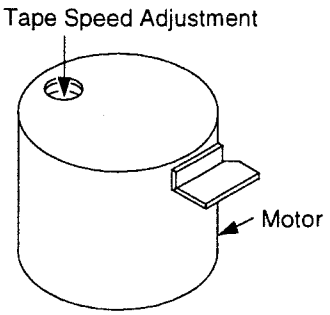

Figure 12

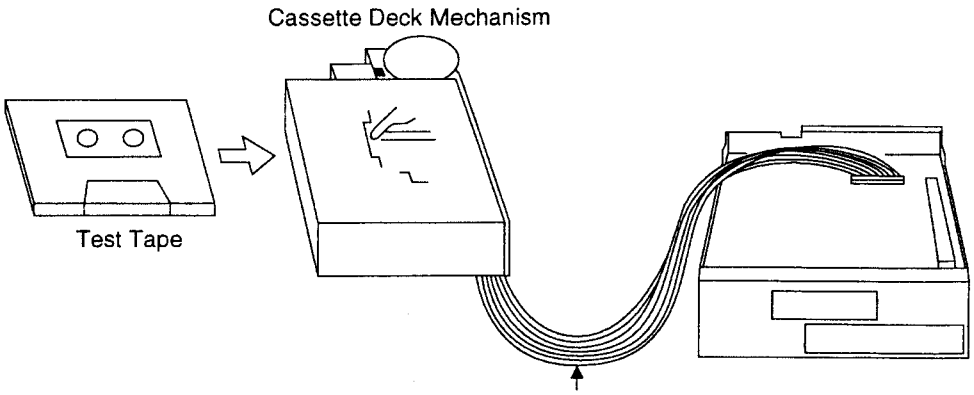

Figure 13

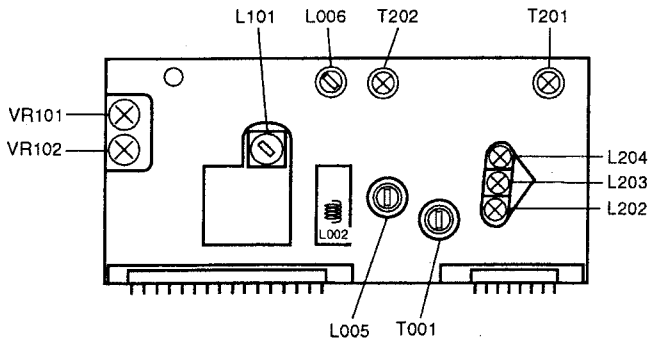

FM/MW/LW Tuner Unit (TU001)

NOTE : For the Test Points, refer to the Parts Layout on P.W. Boards and Wiring Diagram.

Block Diagram

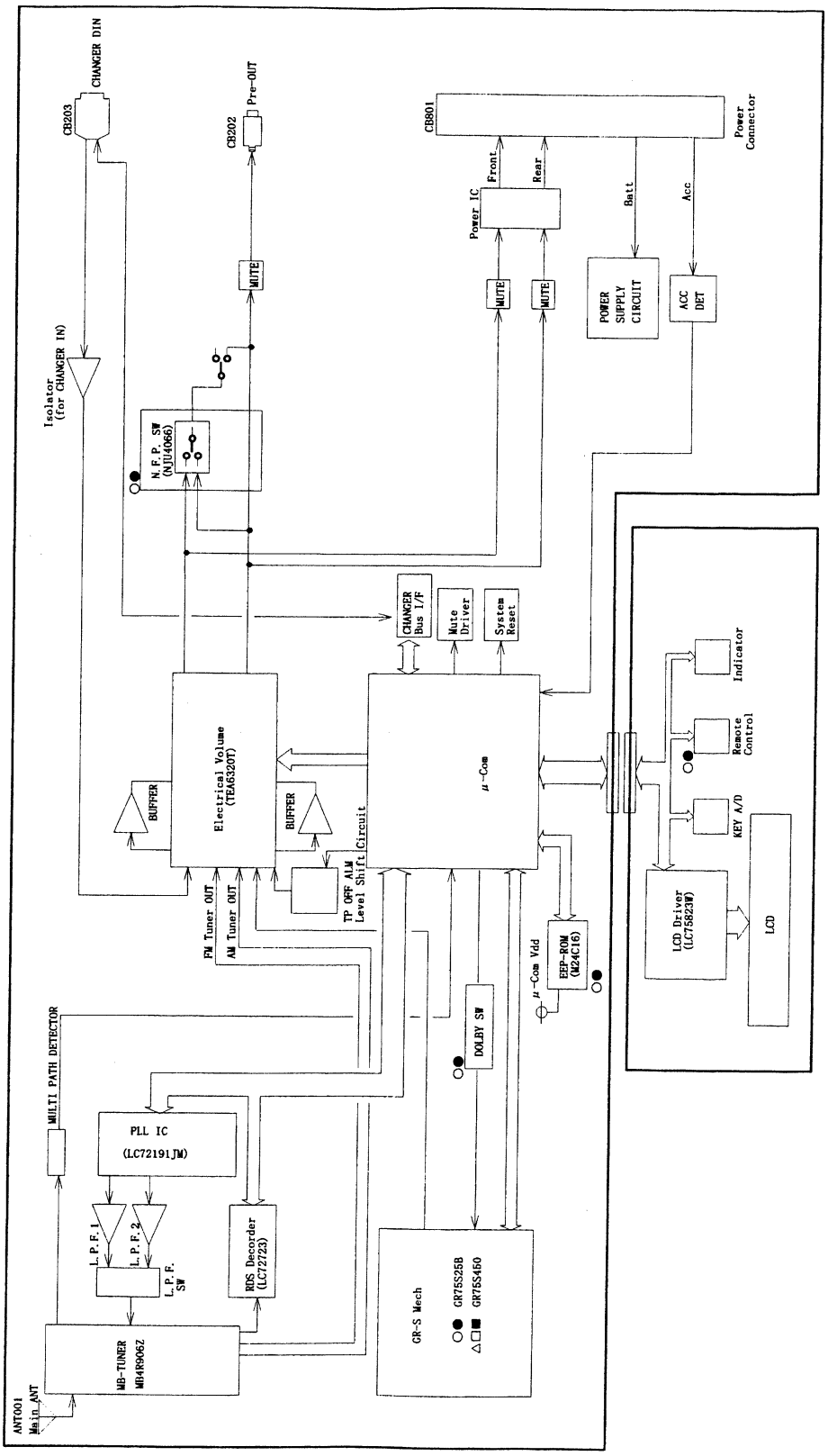

NOTE : ○ : For TDM-7577RB Model Only, ● : For TDM-7576R Model Only, Others : Common.

Parts Layout on P.W.Boards and Wiring Diagram (1/6)

Main P.W.Board (Component Side View)

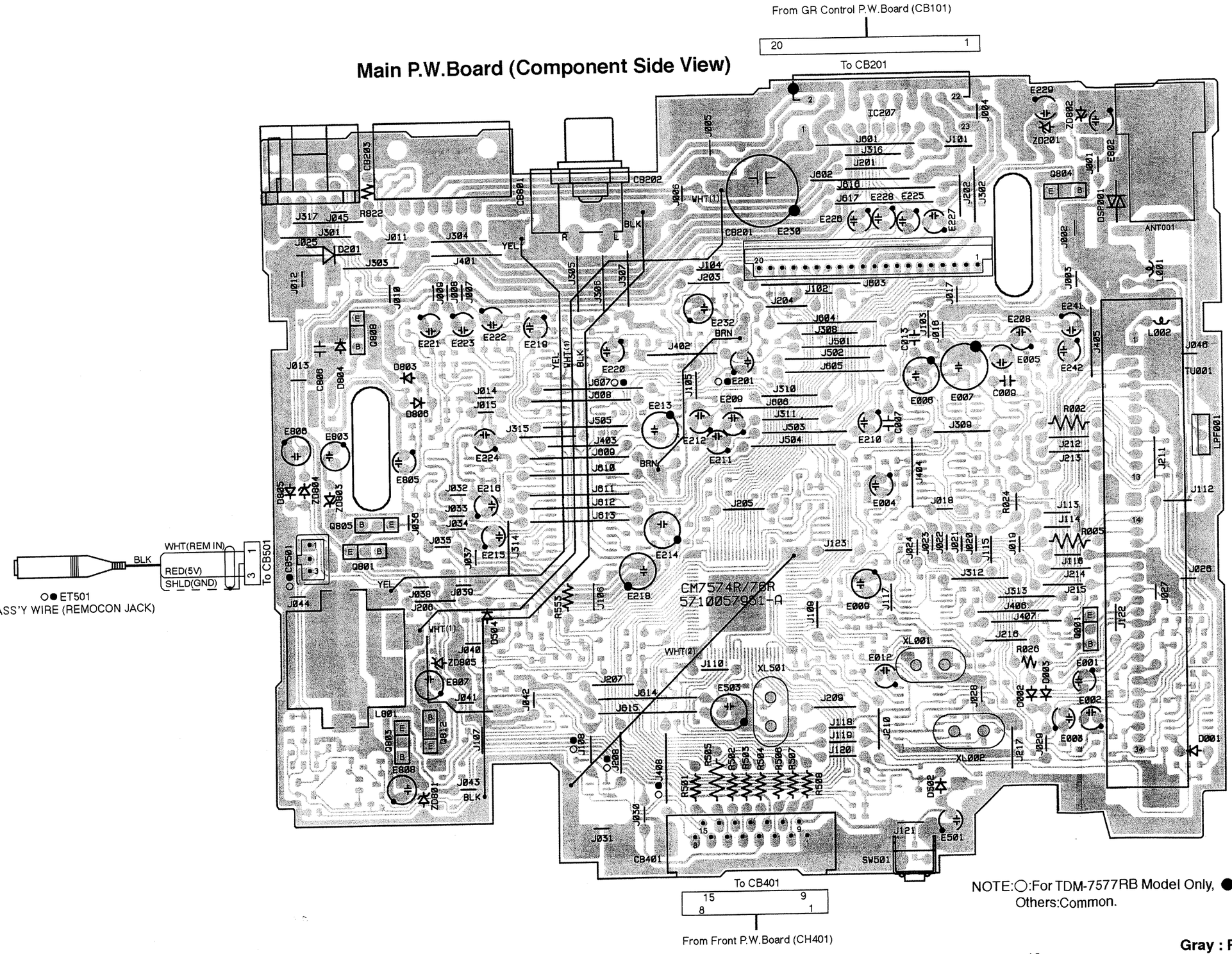

NOTE:○:For TDM-7577RB Model Only, ●:For TDM-7576R Model Only,
Others:Common.

Gray : Foil Side Pattern

Parts Layout on P.W.Boards and Wiring Diagram (2/6)

Main P.W.Board (Foil Side View)

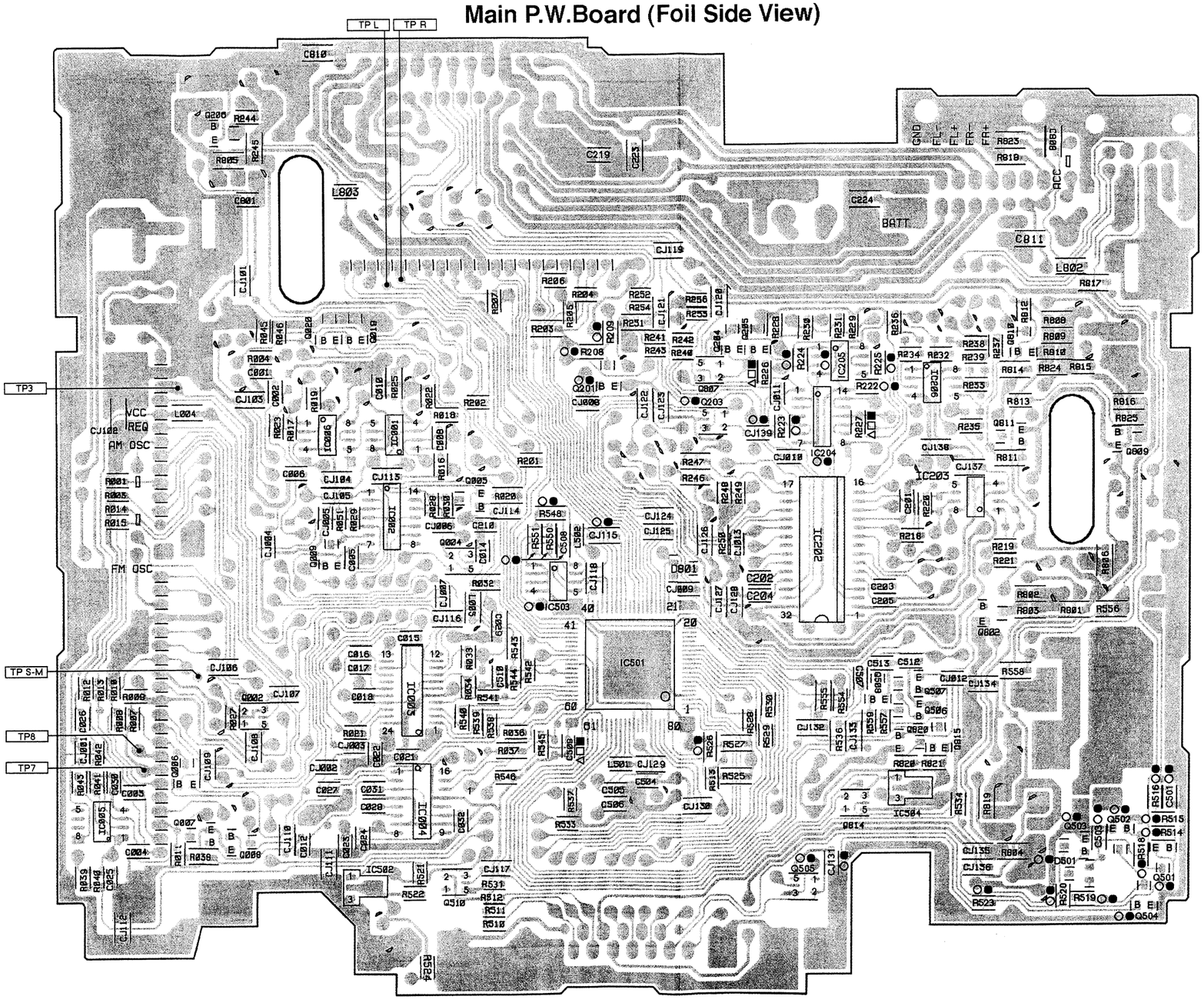

NOTE:○:For TDM-7577RB Model Only, ●:For TDM-7576R Model Only,
△:For TDM-7575RB Model Only, □:For TDM-7574R Model Only,
■:For TDM-7574RM Model Only, Others:Common.

Gray : Foil Side Pattern

Parts Layout on P.W.Boards and Wiring Diagram (3/6)

(TDM-7577RB/TDM-7575RB Model Only)

Front P.W.Board (Component Side View)

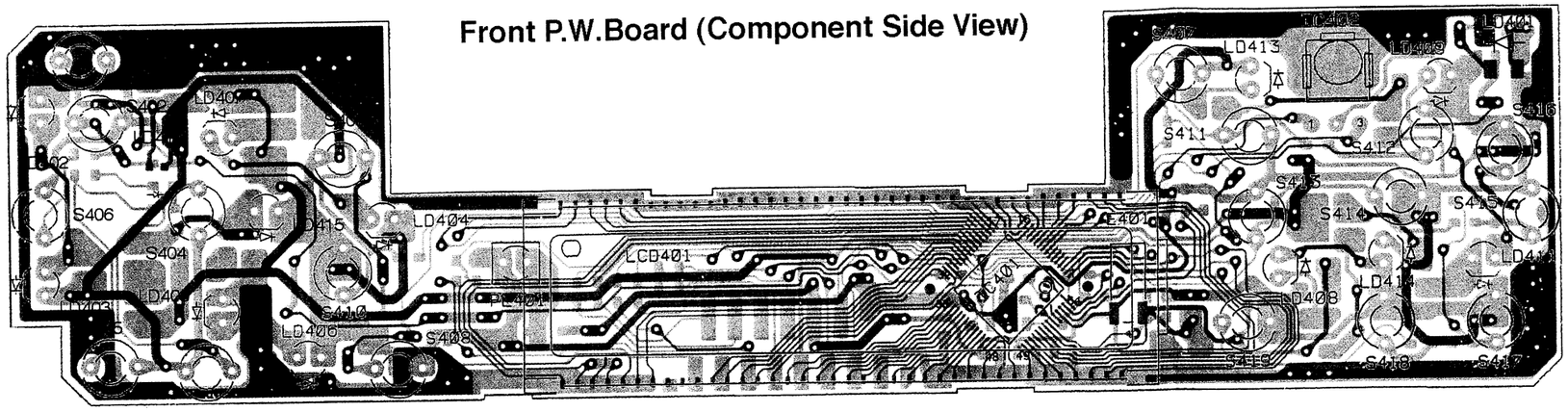

Front P.W.Board (Foil Side View)

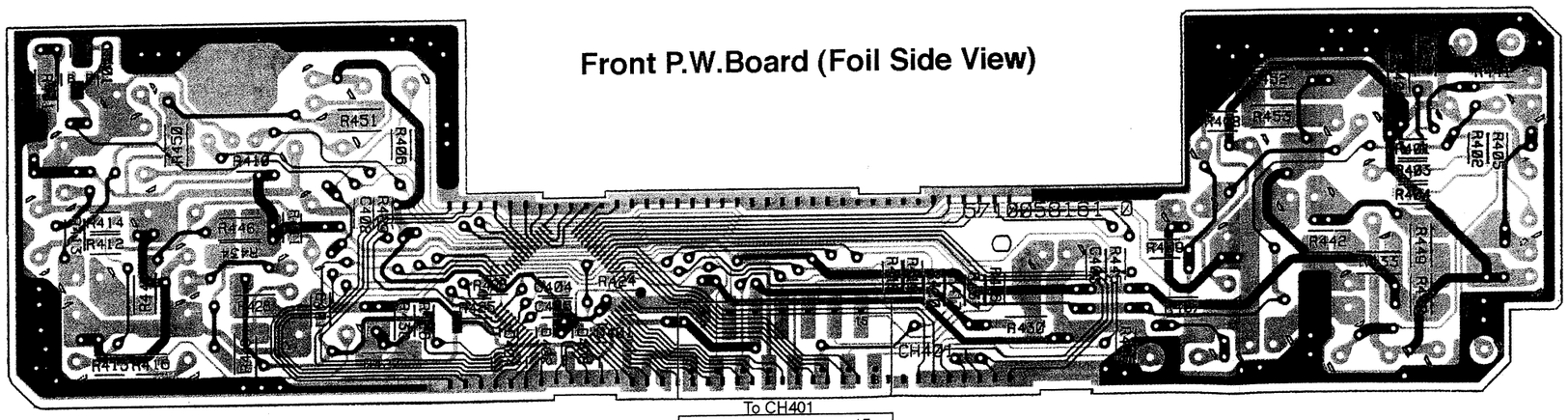

NOTE:○:For TDM-7577RB Model Only,
Others:Common.

Dark Gray : Component Side Pattern
Gray : Foil Side Pattern

Parts Layout on P.W.Boards and Wiring Diagram (4/6)

(TDM-7576R/TDM-7574R/TDM-7574RM Model Only)

Front P.W.Board (Component Side View)

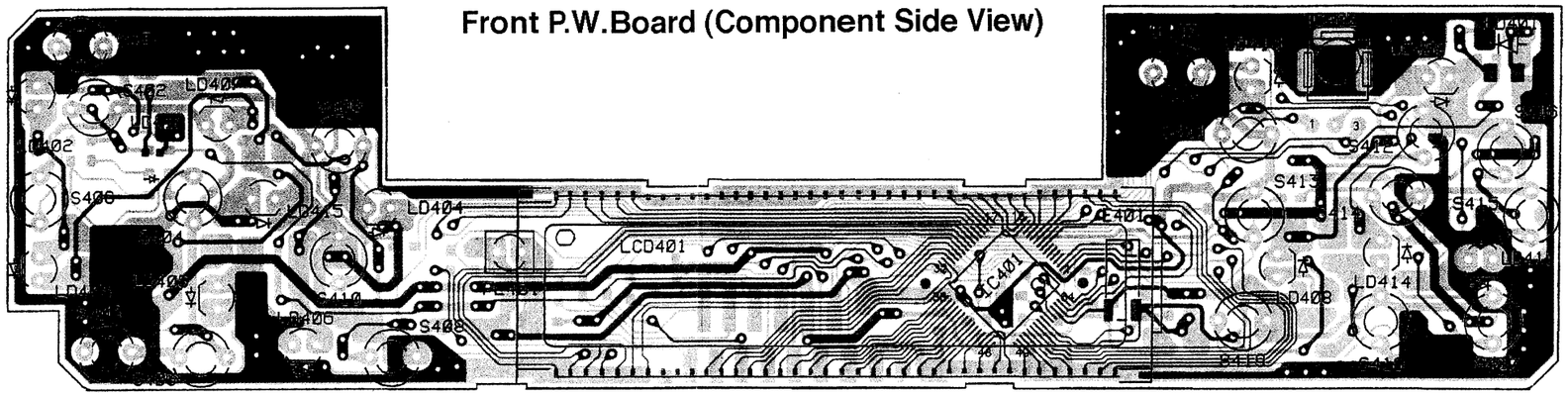

Front P.W.Board (Foil Side View)

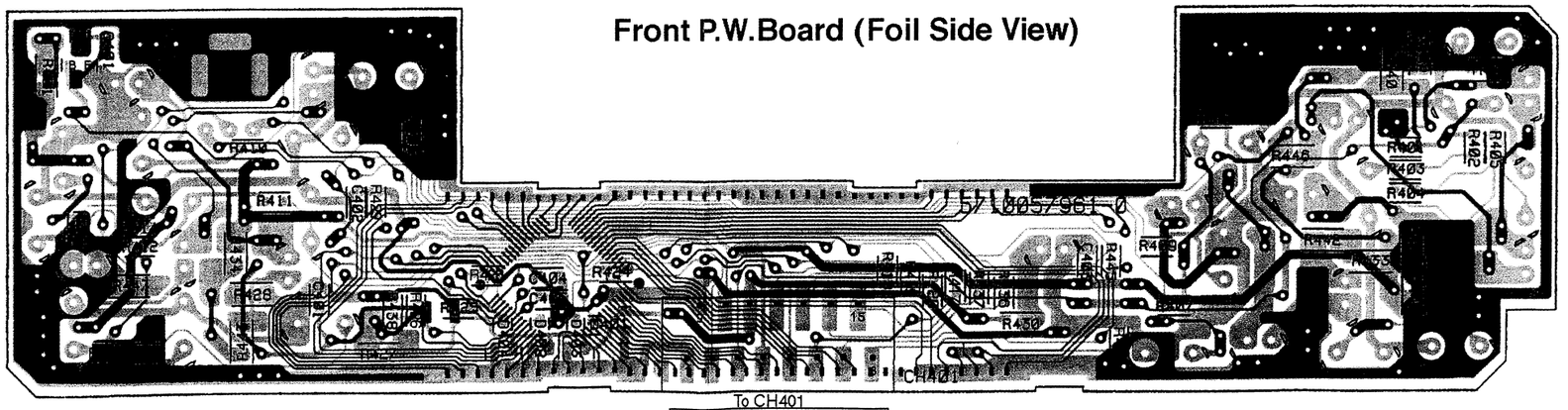

To CH401

9 15
1 8

To Main P.W.Board (CB401)

NOTE:●:For TDM-7576R Model Only,
Others:Common.

Dark Gray : Component Side Pattern
Gray : Foil Side Pattern

Parts Layout on P.W.Boards and Wiring Diagram (5/6)

(GR75S25B:TDM-7577RB/TDM-7576R Model Only)

GR Control P.W.Board (Component Side View)

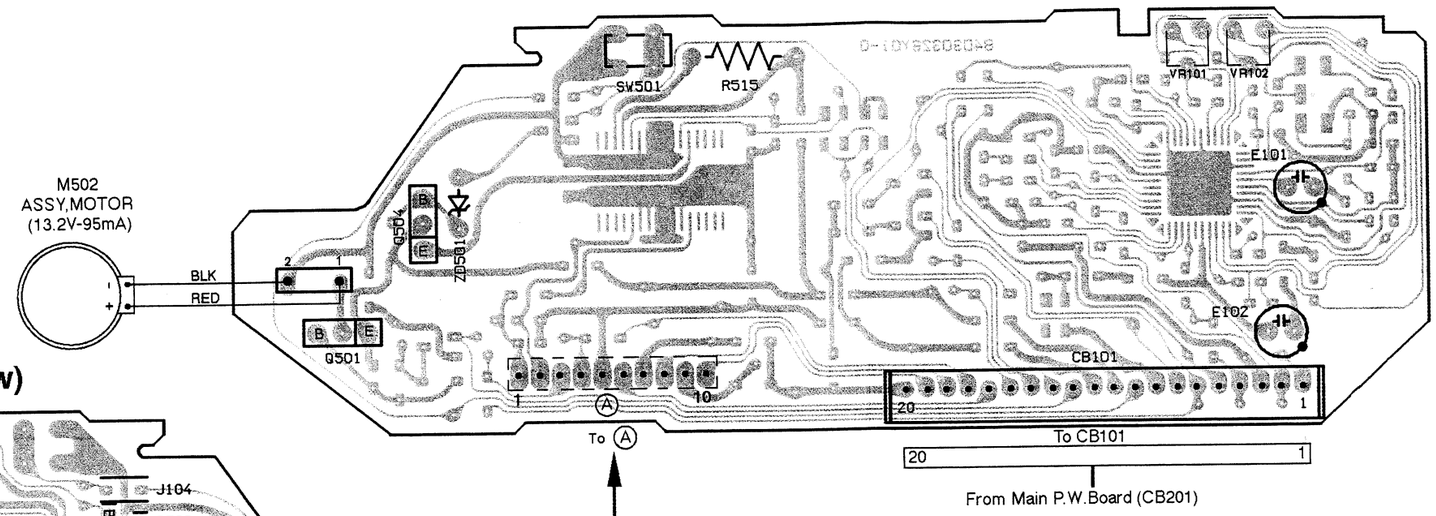

GR Control P.W.Board (Foil Side View)

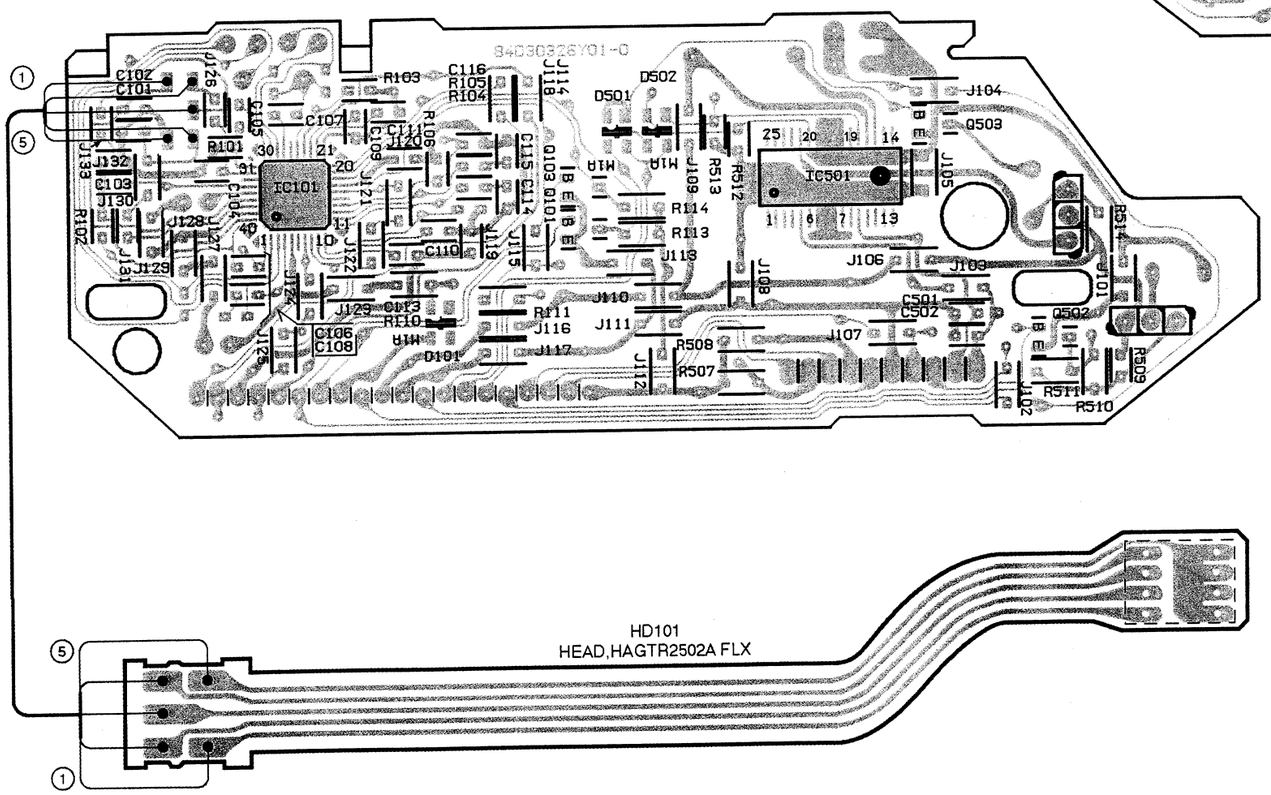

Photo P.W.Board (Foil Side View)

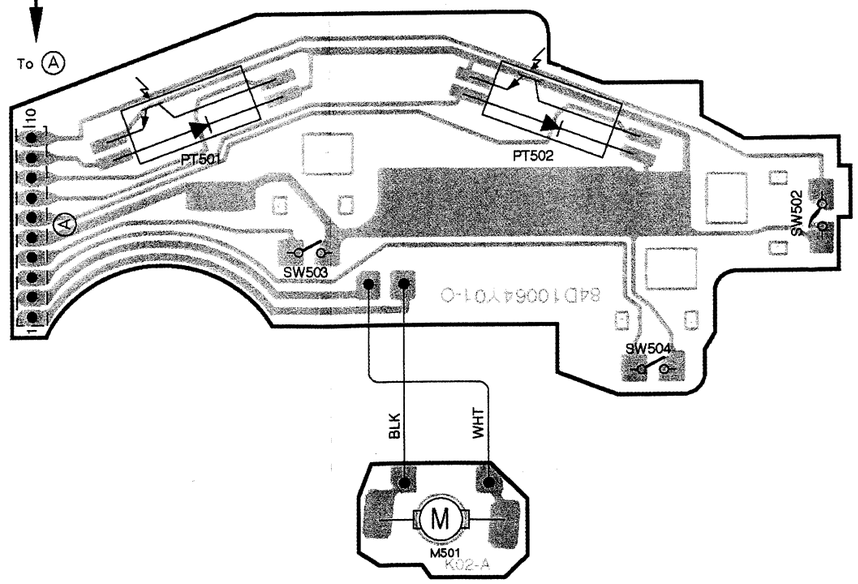

Sub Motor P.W.Board (Foil Side View)

Gray : Foil Side Pattern

Parts Layout on P.W.Boards and Wiring Diagram (6/6)

(GR75S450:TDM-7575RB/TDM-7574R/TDM-7574RM Model Only)

GR Control P.W.Board (Component Side View)

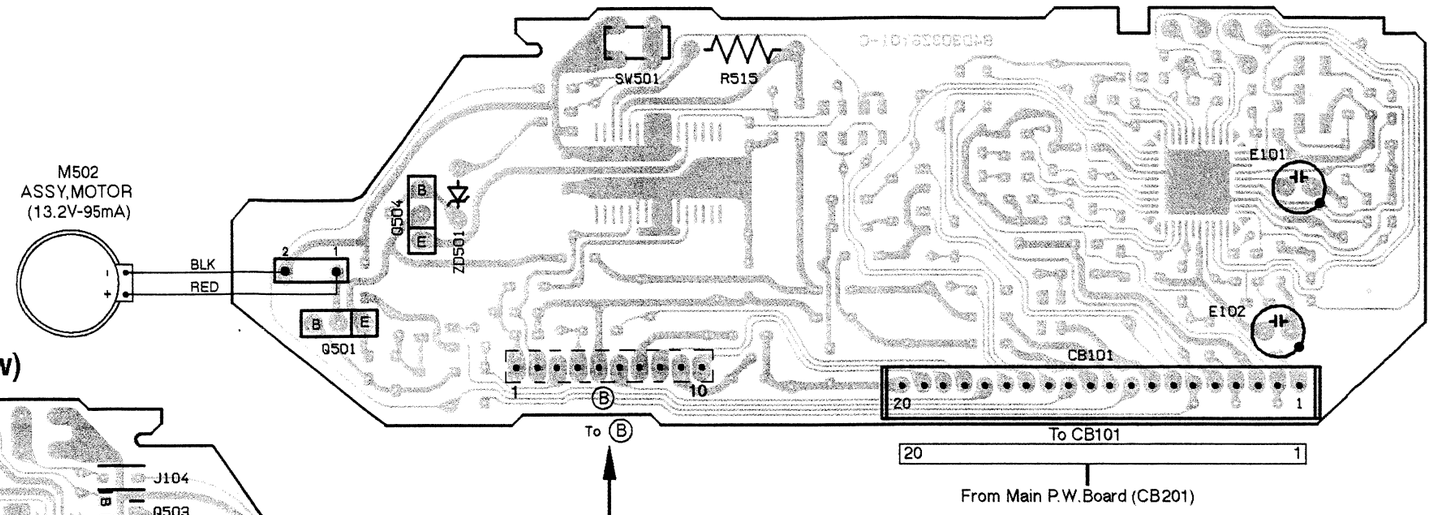

GR Control P.W.Board (Foil Side View)

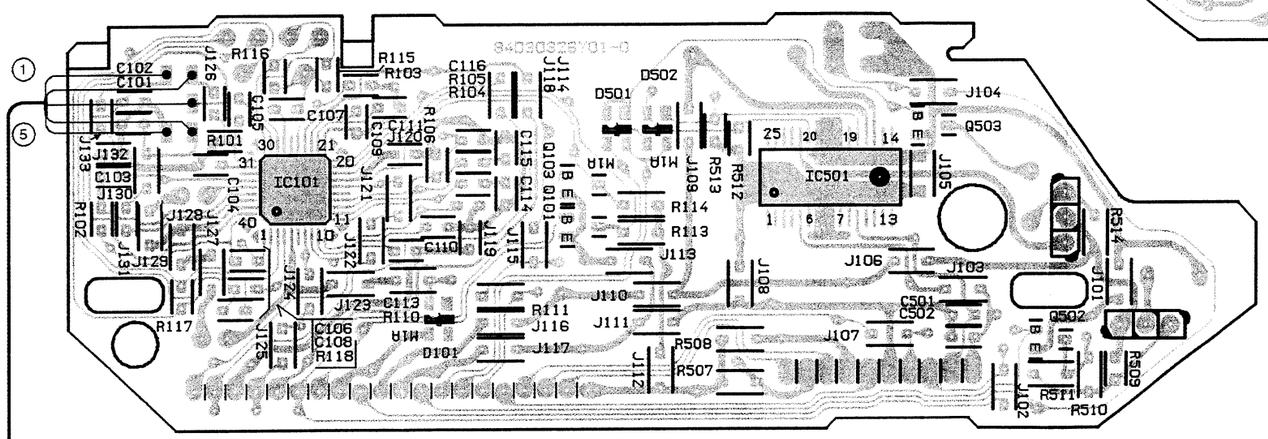

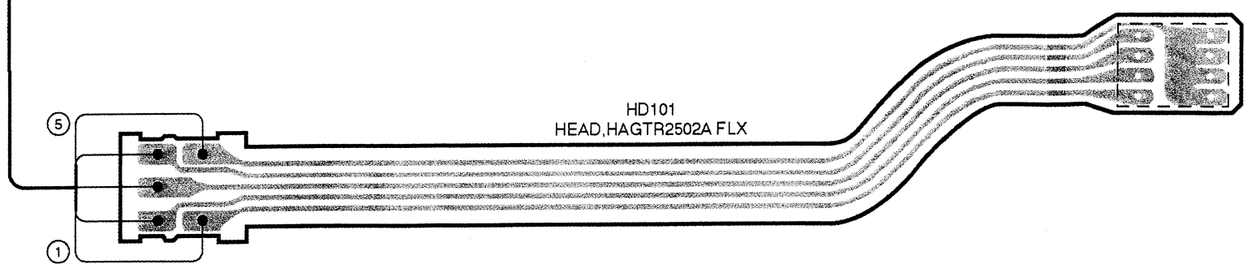

Photo P.W.Board (Foil Side View)

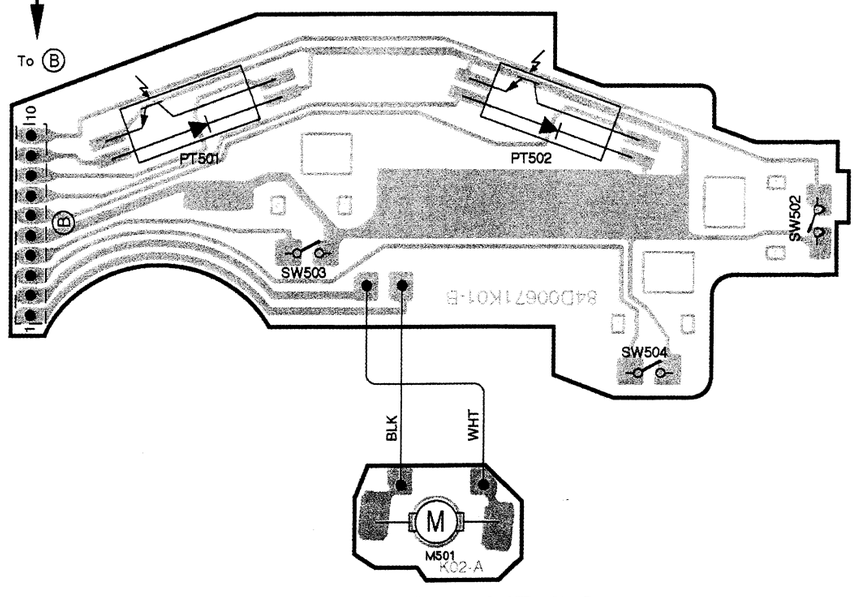

Sub Motor P.W.Board (Foil Side View)

Gray : Foil Side Pattern

Schematic Diagram (1/5)

Main P.W.Board (1/2)

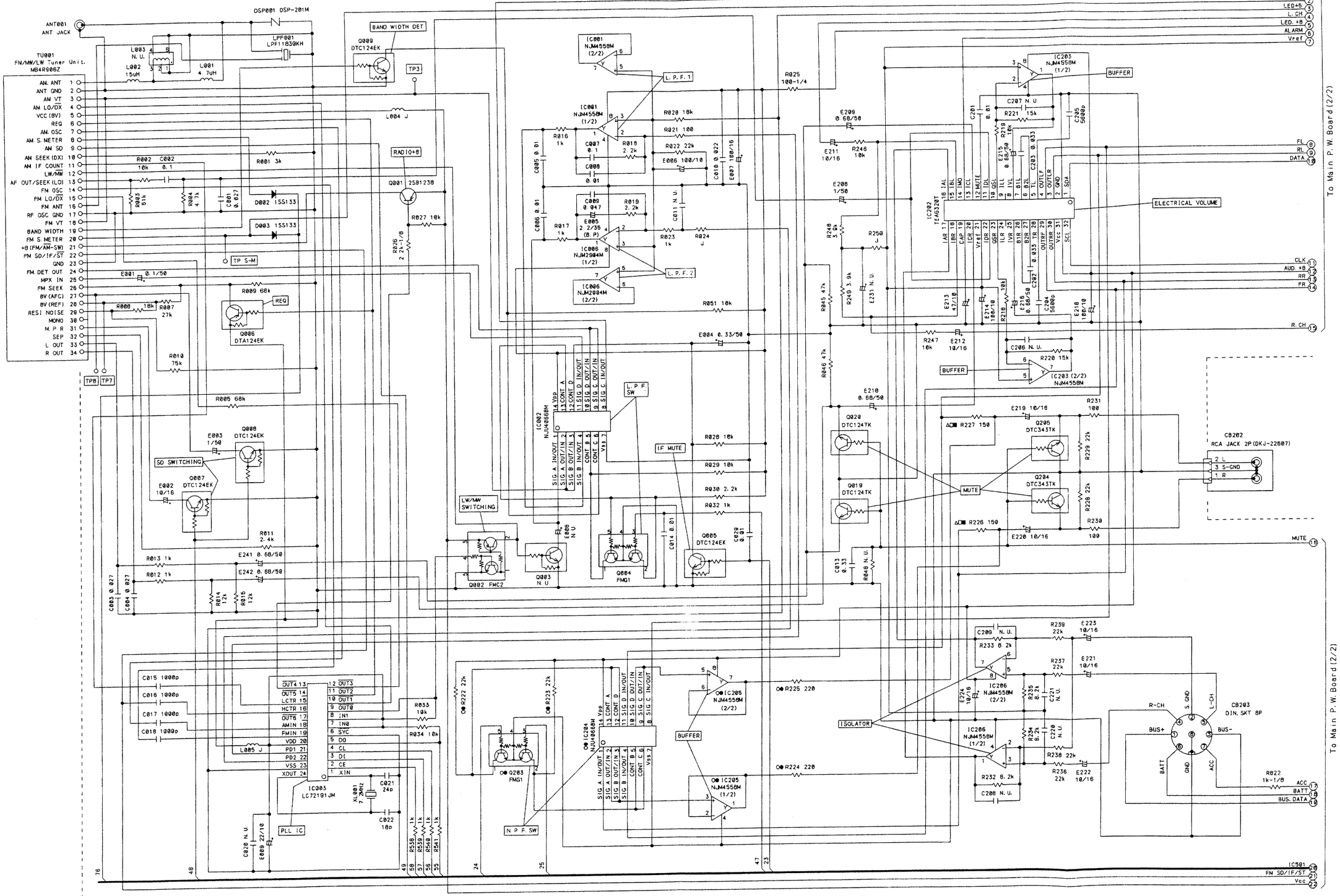

NOTE O: For TDM-7577RB Model Only, ●: For TDM-7576R Model Only, △: For TDM-7575RB Model Only,
□: For TDM-7574R Model Only, ■: For TDM-7574RM Model Only, Others Common.

NOTE: N.U. is Not Used Parts.

Schematic Diagaram(2/5)

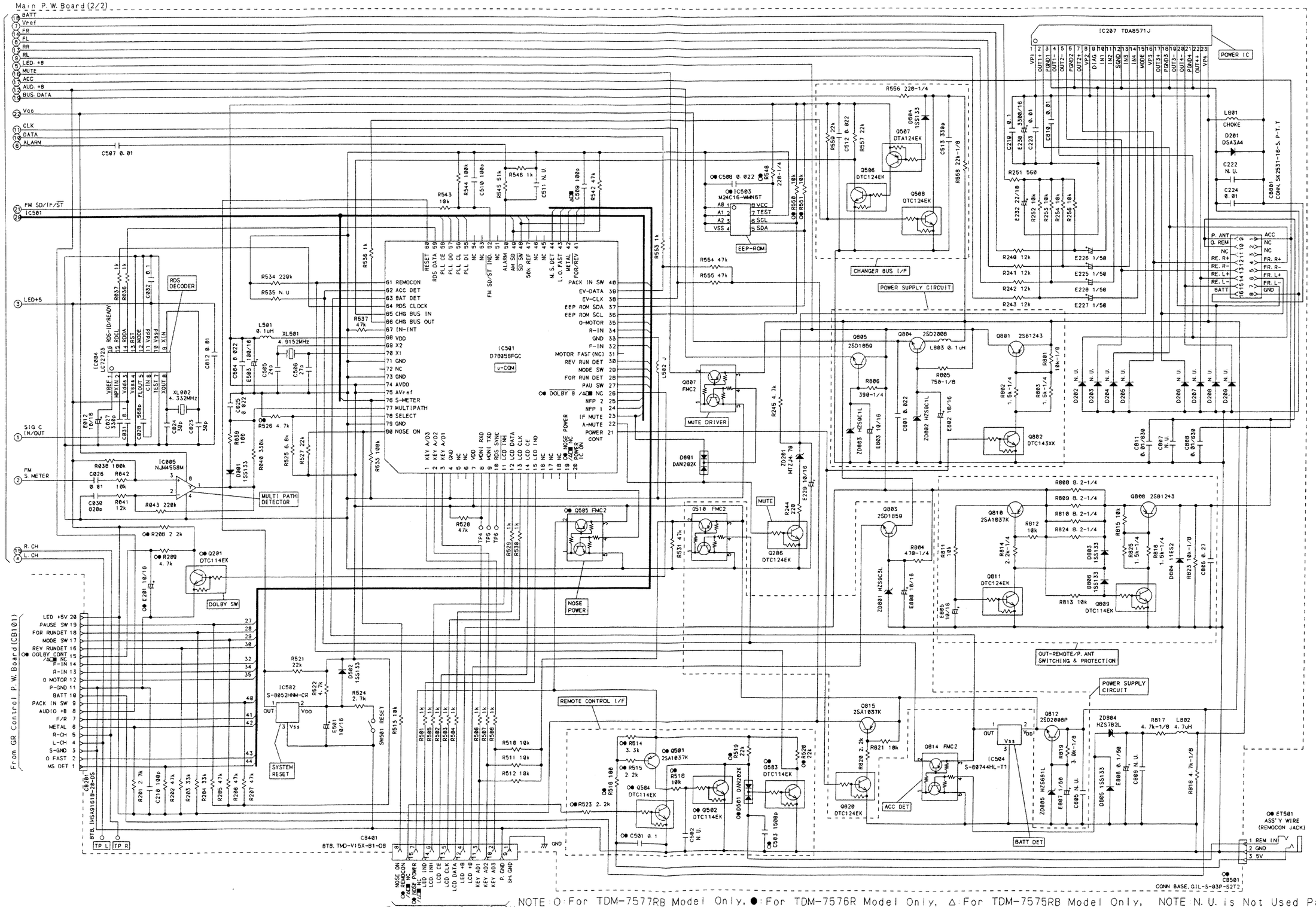

Schematic Diagram (3/5)

<TDM-7577RB/TDM-7575RB Model Only>

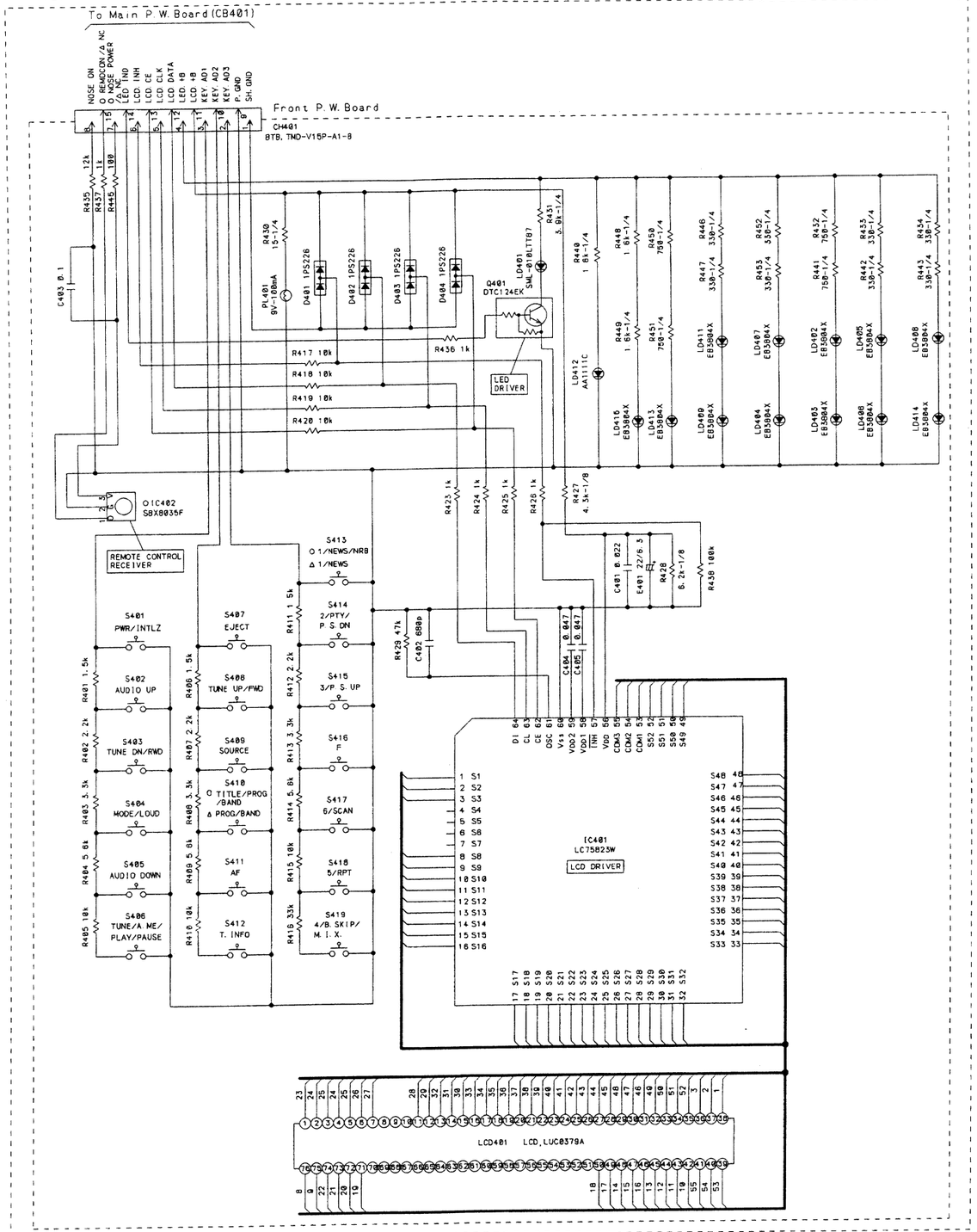

<TDM-7576R/TDM-7574R/TDM-7574RM Model Only>

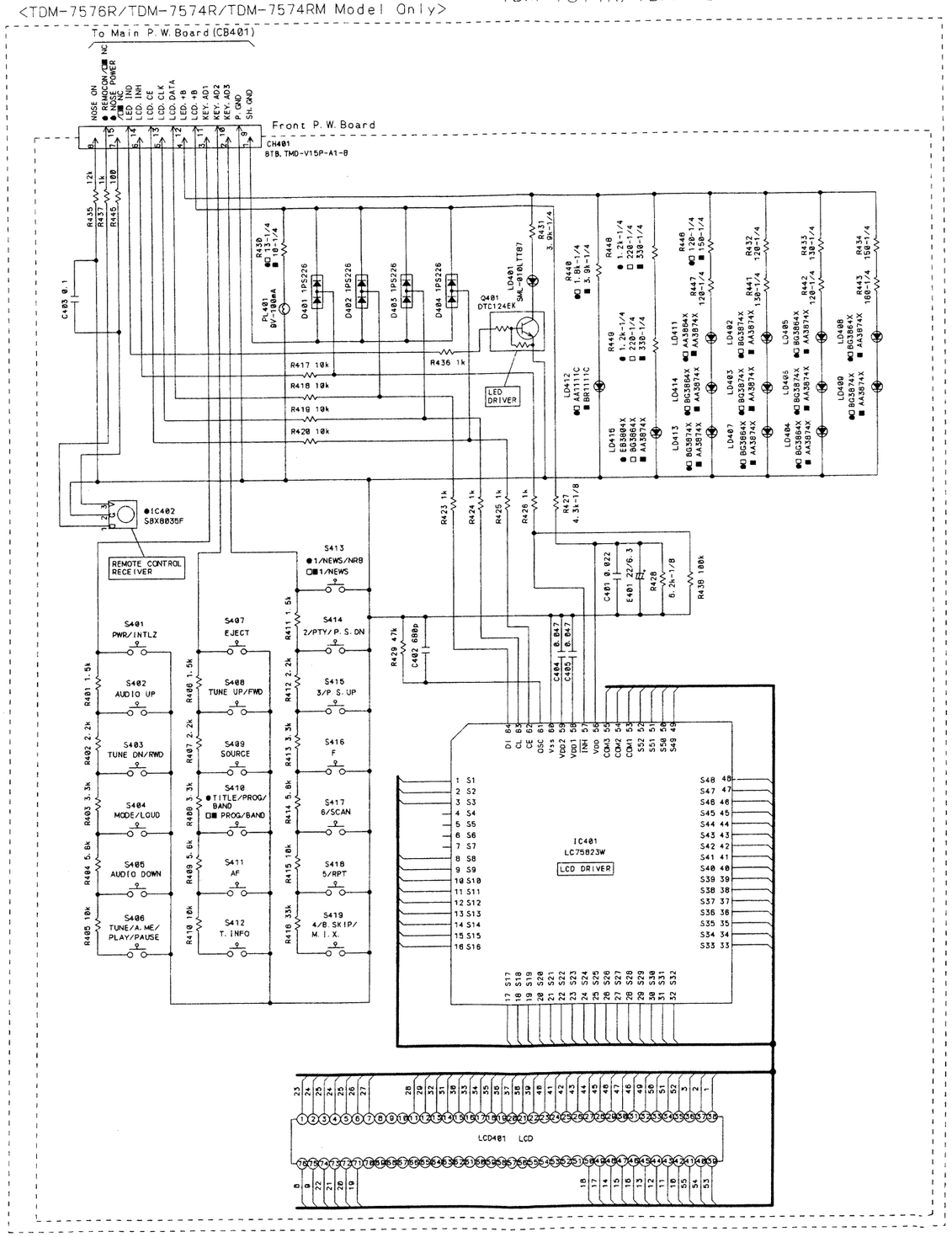

NOTE: O: For TDM-7577RB Model Only, ●: For TDM-7576R Model Only, Δ: For TDM-7575RB Model Only,
□: For TDM-7574R Model Only, ■: For TDM-7574RM Model Only, Others: Common.

Schematic Diagram(4/5)

<GR75S25B TDM-7577RB/TDM-7576R Model Only>

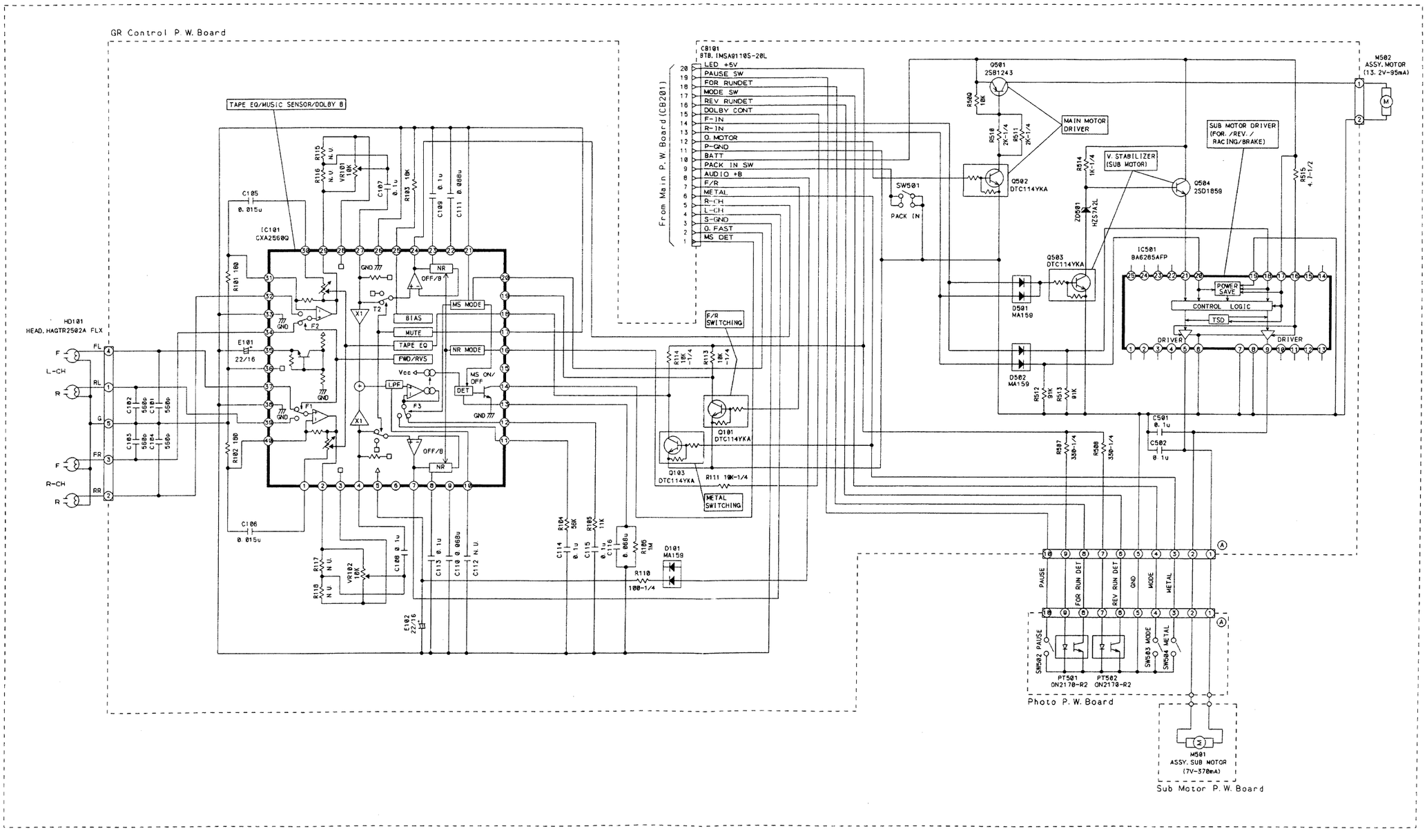

NOTE : N. U. is Not Used Parts.

Schematic Diagram(5/5)

<GR75S450 : TDM-7575RB/TDM-7574R/TDM-7574RM Model Only>

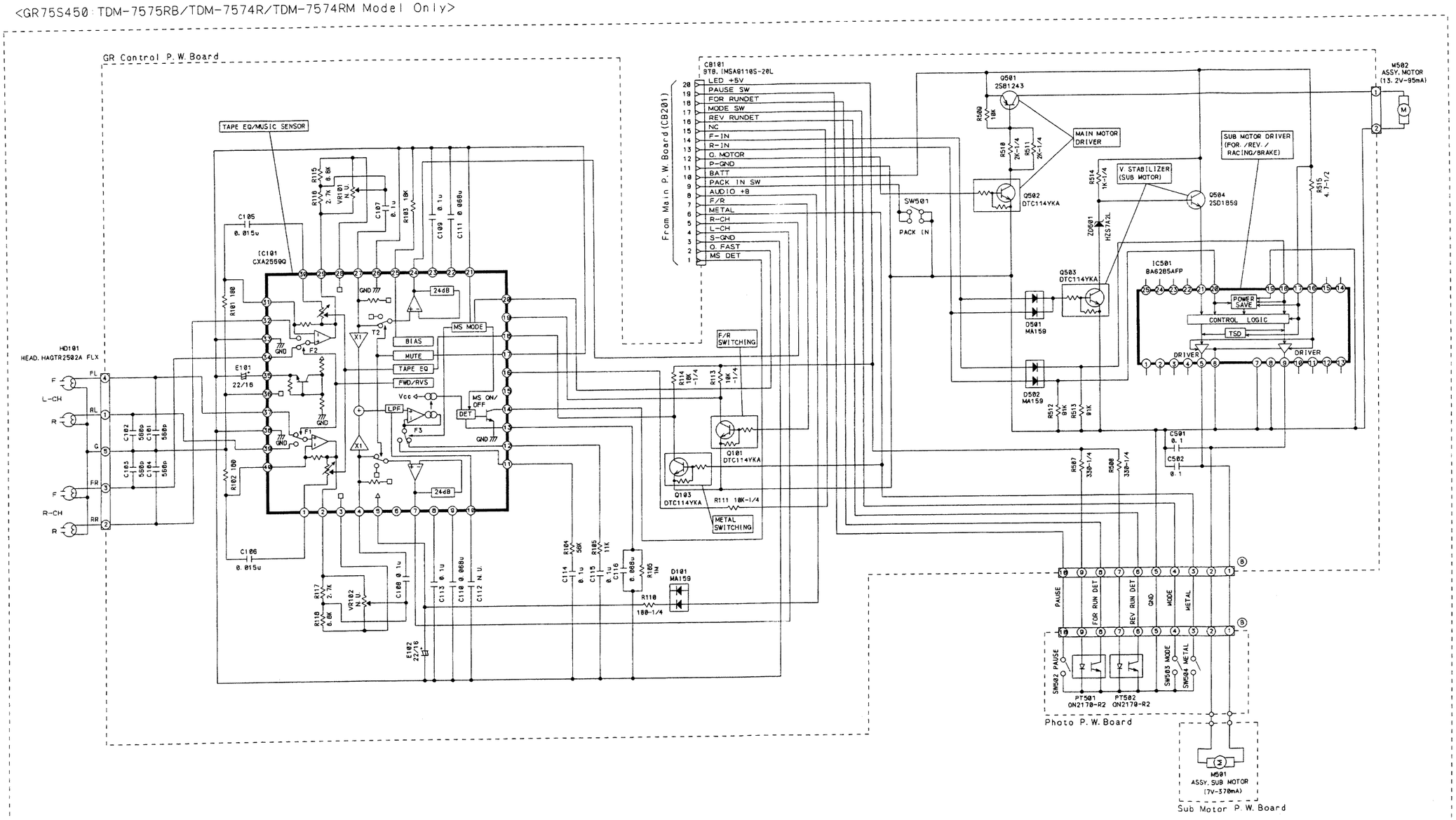

NOTE : N. U. is Not Used Parts.

Terminal Voltage of IC/TR

IC001, 006

1	3.4V
2~4	0V
5	2.7V
6	3.7V
7, 8	13V

IC002

1	13V
2~4	0V
5, 6	13V
7	0V
8~11	3.4V
12	13V
13	0V
14	13V

IC003

1	2.4V	14	NC
2~4	0V	15, 16	0V
5	5V	17	NC
6	0V	18	0V
7, 8	5V	19	2.5V
9~11	0V	20	5V
12	4.6V	21~23	0V
13	0.3V	24	2.6V

IC004

1	2.3V
2	2.6V
3	2.5V
4	0V
5	5V
6~13	0V
14, 15	2.5V
16	NC

IC005

1, 2	5V
3	4.9V
4	0V
5	0.9V
6	0.7V
7	8.3V
8	8.8V

IC202

1	5.2V	19	8.9V
2	0V	20~23	4.5V
3~7	4.5V	24	NC
8	0V	25	0V
9	NC	26~30	4.5V
10, 11	4.5V	31	9V
12	8.9V	32	4.5V
13~18	4.5V		

IC203, 206

1~3	4.4V
4	0V
5~7	4.4V
8	8.8V

○● IC204

1~4	4.4V
5~7	0V
8~11	4.4V
12~14	8.8V

○● IC205

1~3	4.4V
4	0V
5~7	4.4V
8	8.8V

IC207

1	14V	13, 14	2V
2	7.1V	15	5.6V
3	0V	16	14V
4, 5	7.1V	17	7.1V
6	0V	18	0V
7	7.1V	19, 20	7.1V
8	4.5V	21	0V
9	0V	22	7.1V
10, 11	2V	23	14V
12	0V		

IC401

1~55	2.4V	60	0V
56	4.9V	61	3.7V
57	5V	62	3.4V
58	3.2V	63	0.3V
59	1.6V	64	0.2V

○● IC402

1	2.1V
2	0V
3	4.9V

IC501

1~3	5.2V		29	5.2V		61	0V	REMOCON
4	0V	GND	30	2.7V		62	4.9V	ACC DET
5, 6	NC		31	NC		63	4.9V	BAT DET
7	5.2V	VDD	32	5.1V		64	4V	
8	5.2V		33	0V	GND	65	5.2V	
9	5.1V		34, 35	5.1V		66, 67	0V	
10	0V		36~40	0V		68	5.2V	VDD
11	5.1V		41	5.2V		69	3.2V	X2
12	0V		42, 43	0V		70	2.8V	X1
13	0.4V		44	5.2V		71	0V	GND
14	3.5V		45, 46	NC		72	NC	
15	5.2V		47, 48	5.2V		73	0V	GND
16~18	NC		49, 50	0V		74	5.2V	AVDD
19	○● 5.2V		51	NC		75	5.2V	
19	△□■ NC		52	4.3V		76	2V	S-METER
20	NC		53, 54	NC		77	4.3V	MULTIPATH
21	5.2V		55	5V		78	2.1V	SELECT
22~25	0V		56, 57	0V		79	0V	GND
26	○● 0V/ 5.1V	DOLBY ON/ OFF	58	2.1V		80	2.5V	NOSE ON
26	△□■ NC		59	0V				
27, 28	0V		60	2.7V	RESET			

IC502

1	5.2V
2	5.2V
3	0V

○● IC503

1~7	0V
8	5V

IC504

1	4.9V
2	5.2V
3	0V

	E	C	B	MODE		E	C	B	MODE
Q001	9V/ 9V	0V/ 9V	8V/ 8V	AM/ FM	○● Q504	0V/ 0V	0V/ 0V	0V/ 0V	REAR REMOCON ON/ OFF
Q005	0V/ 0V	0V/ 14V	5V/ 0V	MUTE ON/ OFF	Q506	0V	5V	0V	
Q006	5V	5V	0V	REQ	Q507	5V	0V	5V	
Q007	0V/ 0V	0V/ 0V	0V/ 5V	SD SW ON/ OFF	Q508	0V	14V	0V	
Q008	0V/ 0V	0V/ 0V	0V/ 5V	SD SW ON/ OFF	Q801	14V/ 14V	14V/ 0V	13V/ 13V	PWR ON/ OFF
Q009	0V/ 0V	0V/ 13V	8V/ 0V	BD WH ON/ OFF	Q802	0V/ 0V	0V/ 14V	5V/ 0V	PWR ON/ OFF
Q019	0V/ 0V	0V/ 0V	14V/ 0V	MUTE ON/ OFF	Q803	9V/ 0V	14V/ 14V	9V/ 0V	PWR ON/ OFF
Q020	0V/ 0V	0V/ 0V	14V/ 0V	MUTE ON/ OFF	Q804	9V/ 0V	14V/ 14V	9V/ 0V	PWR ON/ OFF
○● Q201	0V/ 0V	4.9V/ 0V	0V/ 5.1V	DOLBY ON/ OFF	Q805	9V/ 0V	14V/ 14V	9V/ 0V	PWR ON/ OFF
Q204	0V/ 0V	0V/ 0V	14V/ 0V	MUTE ON/ OFF	Q808	14V/ 0V	14V/ 0V	13V/ 13V	PWR ON/ OFF
Q205	0V/ 0V	0V/ 0V	14V/ 0V	MUTE ON/ OFF	Q809	0V/ 0V	0V/ 13V	13V/ 0V	PWR ON/ OFF
Q206	0V/ 0V	0V/ 11V	5V/ 0V	A-MUTE ON/ OFF	Q810	13V/ 13V	13V/ 0V	13V/ 13V	PROTECT ON/ OFF
Q401	0V/ 0V	0V/ 13V	4.7V/ 0V	FUN OFF/ ON	Q811	0V/ 0V	13V/ 0V	10V/ 0V	PROTECT ON/ OFF
○● Q501	5V/ 5V	5V/ 0V	5V/ 5V	REAR REMOCON ON/ OFF	Q812	5.2V	14V	5.8V	
○● Q502	0V/ 0V	0V/ 0V	4V/ 0V	REAR REMOCON ON/ OFF	Q815	5V/ 5V	5V/ 0V	5V/ 0V	PWR ON/ OFF
○● Q503	0V/ 0V	3V/ 3V	0V/ 0V	REAR REMOCON ON/ OFF	Q820	0V/ 0V	0V/ 5V	5V/ 0V	PWR ON/ OFF

	1	2	3	4	5	MODE
Q002	0V/ 8V	8V/ 0V	8V/ 8V	5V/ 0V	0V/ 0V	LW ON/ OFF
Q004	13V/ 0V	0V/ 13V	5V/ 0V	0V/ 0V	0V/ 13V	AF ON/ OFF
○● Q203	9V/ 0V	0V/ 9V	5V/ 0V	0V/ 0V	0V/ 5V	NFP ON/ OFF
○● Q505	NC	5V	5V	5V	0V	
Q510	NC	5V/ 0V	5V	5V/ 0V	0V	ACC ON/ OFF
Q807	NC	14V/ 0V	14V	5V/ 0V	0V	MUTE ON/ OFF
Q814	NC	5V/ 0V	5V	5V/ 0V	0V	ACC ON/ OFF

<Measuring Conditions>

1. Power Supply Voltage : DC14.4V
2. Measuring Meter : Digital Multi Meter
3. Measuring Point Reference : Between GND
4. Measuring Conditions : No Signal Input
   - FM : 98.1MHz
   - MW : 999kHz
   - LW : 216kHz
   - TAPE : Blank Tape Play

NOTE : ○ : For TDM-7577RB Model Only, ● : For TDM-7576R Model Only,
△ : For TDM-7575RB Model Only, □ : For TDM-7574R Model Only,
■ : For TDM-7574RM Model Only, Others : Common.

(Cassette Deck Mechanism)

IC101

1	5.5V	11, 12	5.4V	27, 28	5.5V
2	5.4V	13	0.3V	29	5.8V
3	5.5V	14	4.4V	30	5.6V
4	4.5V	15	NC	31, 32	5.5V
5	11V	16~21	0V	33	0V
6	NC	22, 23	0.6V	34	5.4V
7	5.4V	24	5.4V	35~37	5.5V
8, 9	0.6V	25	1.2V	38	0V
10	NC	26	0V	39, 40	5.5V

IC501

1~4	NC	18	0.1V
5	0.7V	19	0.2V
6	0V	20	0.1V
7~9	0.7V	21	12.6V
10~15	NC	22~25	NC
16, 17	13.2V		

	E	C	B
Q101	0V	0V	5.2V
Q103	0V	0V	4.1V
Q501	13.2V	13.2V	12.5V
Q502	0V	0V	5.2V
Q503	6.6V	0V	0.3V
Q504	12.7V	13.2V	13.2V

<Measuring Conditions>

1. Power Supply Voltage : DC13.2V
2. Measuring Meter : Digital Multi Voltmeter
3. Measuring Point Reference : Between GND
4. Measuring Conditions : TAPE: For play, Normal position, Dolby OFF

Description of IC Terminal

D78058FGC : IC501

No.	Symbol	I/O	Terminal Description
1	KEY A/ D 3	I	KEY A/ D 3 input terminal.
2	KEY A/ D 2	I	KEY A/ D 2 input terminal.
3	KEY A/ D 1	I	KEY A/ D 1 input terminal.
4	GND	—	GND connect terminal.
5 6	NC	—	No connect terminal.
7	V_{DD}	—	V_{DD} connect terminal.
8	MONI RXD	I	RDS monitor input terminal.
9	MONI TXD	O	RDS monitor output terminal.
10	RDS SYNC	O	Sync. signal output terminal.
11	$\overline{\text{LCD INH}}$	O	INH signal output terminal to LCD DRIVER (LC75823W).
12	LCD DATA	O	Serial data signal output terminal to LCD DRIVER (LC75823W).
13	LCD CLK	O	Serial clock output terminal to LCD DRIVER (LC75823W).
14	LCD CE	O	Chip Enable signal output terminal to LCD DRIVER (LC75823W).
15	LED IND	O	FUNCTION IND control signal output terminal. Hi : Lit Lo : Unlit
16 17 18	NC	—	No connect terminal.
19	○● NOSE POWER	O	Power control signal output terminal to NOSE.
	△□■ NC	—	No connect terminal.
20	POWER IC ON	O	STBY control signal output terminal to POWER IC.
21	POWER CONT	O	Power control signal output terminal for AUDIO/LIGHT/ TUNER and so forth.
22	A-MUTE	O	AUDIO MUTE signal output terminal.
23	IF MUTE	O	IF MUTE output terminal.
24	NFP 1	O	NFP CONT signal output terminal. Hi : FAD F at NFP ON Lo : Others
25	NFP 2	O	NFP CONT signal output terminal. Hi : FAD R at NFP ON Lo : Others
26	○● $\overline{\text{DOLBY B}}$	O	B NR ON/OFF signal output terminal. Hi : OFF Lo : ON
	△□■ NC	—	No connect terminal.
27	PAUSE SW	I	Input terminal of PAUSE MODE . Hi : PACK DN detected at UP EDGE Lo : PAUSE MODE detected at DN EDGE
28	FOR RUN DET	I	Input terminal of FOR REEL rotated detection signal. Stop : fix to Hi/Lo
29	MODE SW	I	Input terminal of MODE detection signal. Hi : MODE decision Lo : MODE transfer
30	REV RUN DET	I	Input terminal of REV REEL rotated detection signal. Stop : fix to Hi/Lo
31	MOTOR FAST (NC)	—	No connect terminal.
32	F-IN	O	Output terminal of SUB MOTOR rotated control signal. CCW CW BRAKE OFF F-IN L H H L
33	GND	—	GND connect terminal.

No.	Symbol	I/O	Terminal Description
34	R-IN	O	Output terminal of SUB MOTOR rotated control signal. CCW CW BRAKE OFF R-IN H L H L
35	O-MOTOR	O	Input terminal of MOTOR rotated control signal. Hi : rotate Lo : stop
36	EEP ROM SCL	O	Clock output terminal for EEP-ROM.
37	EEP ROM SDA	I/O	Data output terminal for EEP-ROM.
38	EV-CLK	I/O	Serial clock signal output terminal to ELECTRICAL VOLUME (TEA6320T).
39	EV-DATA	I/O	Serial data signal output terminal to ELECTRICAL VOLUME (TEA6320T).
40	PACK IN SW	I	Input terminal of PACK IN detection signal. Hi : PACK IN Lo : PACK OUT
41	FOR/$\overline{\text{REV}}$	O	INDICATOR output terminal of TAPE FOR/REV. Hi : FOR Lo : REV
42	METAL	I	METAL TAPE detection terminal. Hi : METAL Lo : NORMAL
43	L.O.FAST	O	GAIN CONT control signal output terminal of MS IC at CUE/REV.
44	M.S.DET	I	Input terminal of TAPE music station detection signal. Hi : between music Lo : during music
45 46	NC	—	No connect terminal.
47	50k REF	O	LPF switching signal output terminal at active RDS.
48	$\overline{\text{SD SW}}$	O	Time constant switching terminal for high speed active PLL at AF check and so forth.
49	AM SD	I	AM SD signal input terminal.
50	ALARM	O	ALARM signal output terminal. (2.4KHz)
51	NC	—	No connect terminal.
52	FM SD/ $\overline{\text{ST IND.}}$	I	ST signal input terminal at receiving FM. Lo : receiving ST station FM SD signal input terminal at tuning FM. Hi : SD ON
53 54	NC	—	No connect terminal.
55	PLL DI	I	DATA input terminal from PLL IC (LC72191JM).
56	PLL CLK	O	Sync. signal output terminal to PLL IC (LC72191JM).
57	PLL DO	O	DATA output terminal to PLL IC (LC72191JM).
58	PLL CE	O	Communication CONT signal output terminal to PLL IC (LC72191JM).
59	RDS DATA	I	RDS DATA input terminal from RDS DECODER (LC72723).
60	$\overline{\text{RESET}}$	I	SYSTEM RESET signal input terminal.
61	REMOCON	I	REMOCON DATA signal input terminal.
62	ACC DET	I	ACC detection signal input terminal.
63	BAT DET	I	BATT detection signal input terminal. (Manage compulsion stand-by.)
64	RDS CLOCK	I	RDS CLOCK input terminal from RDS DECODER (LC72723).
65	CHG BUS IN	I	Signal input terminal form CD changer BUS I/F.
66	CHG BUS OUT	O	Signal output terminal to CD changer BUS I/F.
67	IN-INT	I	IN-INTERRUPT signal input terminal.
68	V_{DD}	—	V_{DD} connect terminal.
69	X2	O	System clock OSC circuit output terminal. (4.9152MHz)

No.	Symbol	I/O	Terminal Description
70	X1	I	System clock OSC circuit input terminal. (4.9152MHz)
71	GND	—	GND connect terminal.
72	NC	—	No connect terminal.
73	GND	—	GND connect terminal.
74	AV_{DD}	—	Analog power terminal of AD converter.
75	AVref	—	Reference voltage input terminal of AD converter.
76	S-METER	I	SIGNAL METER input terminal.
77	MULTIPATH	I	Multi path rejection detection terminal for receiving station.
78	SELECT	I	Function set up terminal.
79	GND	—	GND connect terminal.
80	NOSE ON	I	FRONT PANEL detect signal input terminal.

NOTE : ○ : For TDM-7577RB Model Only, ● : For TDM-7576R Model Only,
△ : For TDM-7575RB Model Only, □ : For TDM-7574R Model Only,
■ : For TDM-7574RM Model Only, Others : Common.

Electrical Parts List

Capacitor : μF=microfarads,pF=picofarads

Abbreviations

RES. = Resistor	CAP. = Capacitor
C.F. = Carbon Film	ELY. = Electrolytic
M.F. = Metal Film	CER. = Ceramic
M.O. = Metal OxideFilm	MYL. = Mylar
M.P. = Metal Plate	TAN. = Tantalum
TR. = Transistor	POLY. = Polystyrol
TRANS. = Transformer	PP. = Polypropylene
CP. = Chip	PLT. = Polyethylene
	PF. = Polyester Film

Symbol No.	Part No.	Description
	Main P.W.Board	
	IC's	
	IC001	51E20551S01	IC, MJM 4558M-TE3
	IC002	51E23844S01	IC, NJU4066BM-TE2
	IC003	51T85265W02	IC, LC72191JM-SE9
	IC004	51T35302Y01	IC, LC72723
	IC005	51E20551S01	IC, MJM 4558M-TE3
	IC006	51E23842S01	IC, NJM 2904M-TE3-SE
	IC202	51T65131W01	IC, TEA6320T-SEE
	IC203	51E20551S01	IC, MJM 4558M-TE3
○	IC204	51E23844S01	IC, NJU4066BM-TE2
●	IC204	51E23844S01	IC, NJU4066BM-TE2
○	IC205	51E20551S01	IC, MJM 4558M-TE3
●	IC205	51E20551S01	IC, MJM 4558M-TE3
	IC206	51E20551S01	IC, MJM 4558M-TE3
	IC207	51T25217Y01	IC, TDA8571J-7S
	IC501	51T15162Y02	IC, D78058FGC-104-QT
	IC502	51T95014F13	IC, S-8052HNM-CR-T1-SE2
○	IC503	51T25162Y01	M24C16-WMN6T
●	IC503	51T25162Y01	M24C16-WMN6T
	IC504	51T95563W01	S-80744HL-T1-NE2
	Transistors	
	Q001	48T84234F03	TR, 2SB1238-Q-TV4 -RD
	Q002	48T73888F12	TR, CP, FMC2-99
	Q004	48T73888F08	TR, CP, FMG1-99
	Q005	48T62967F03	TR, DTC124EK-T146 -CP
	Q006	48T62966F03	TR, DTA124EK-T146 -CP
	Q007	48T62967F03	TR, DTC124EK-T146 -CP
	Q008	48T62967F03	TR, DTC124EK-T146 -CP
	Q009	48T62967F03	TR, DTC124EK-T146 -CP
	Q019	48T62967F21	TR, DTC124TK-T-146-CP
	Q020	48T62967F21	TR, DTC124TK-T-146-CP
○	Q201	48T62967F02	TR, DTC114EK-T146 -CP
●	Q201	48T62967F02	TR, DTC114EK-T146 -CP

Symbol No.	Part No.	Description
○	Q203	48T73888F08	TR, CP, FMG1-99
●	Q203	48T73888F08	TR, CP, FMG1-99
	Q204	48T62967F33	TR, DTC343TK-T146 -CP
	Q205	48T62967F33	TR, DTC343TK-T146 -CP
	Q206	48T62967F03	TR, DTC124EK-T146 -CP
○	Q501	48T63420F01	TR, 2SA1037K-96 -CP
●	Q501	48T63420F01	TR, 2SA1037K-96 -CP
○	Q502	48T62967F02	TR, DTC114EK-T146 -CP
●	Q502	48T62967F02	TR, DTC114EK-T146 -CP
○	Q503	48T62967F02	TR, DTC114EK-T146 -CP
●	Q503	48T62967F02	TR, DTC114EK-T146 -CP
○	Q504	48T62967F02	TR, DTC114EK-T146 -CP
●	Q504	48T62967F02	TR, DTC114EK-T146 -CP
○	Q505	48T73888F12	TR, CP, FMC2-99
●	Q505	48T73888F12	TR, CP, FMC2-99
	Q506	48T62967F03	TR, DTC124EK-T146 -CP
	Q507	48T62966F03	TR, DTA124EK-T146 -CP
	Q508	48T62967F03	TR, DTC124EK-T146 -CP
	Q510	48T73888F12	TR, CP, FMC2-99
	Q801	48T84366F03	TR, 2SB1243-Q-TV2 -RD
	Q802	48T62967F05	TR, DTC143XK-T146 -CP
	Q803	48E23606S01	TR, 2DS 1859P, Q, R-TV4-RD
	Q804	48T15289W03	TR, 2SD 2008Q -RD
	Q805	48E23606S01	TR, 2DS 1859P, Q, R-TV4-RD
	Q807	48T73888F12	TR, CP, FMC2-99
	Q808	48T84366F03	TR, 2SB1243-Q-TV2 -RD
	Q809	48T62967F02	TR, DTC114EK-T146 -CP
	Q810	48T63420F01	TR, 2SA1037K-96 -CP
	Q811	48T62967F03	TR, DTC124EK-T146 -CP
	Q812	48T15289W03	TR, 2SD 2008Q -RD
	Q814	48T73888F12	TR, CP, FMC2-99
	Q815	48T63420F01	TR, 2SA1037K-96 -CP
	Q820	48T62967F03	TR, DTC124EK-T146 -CP
	Diodes	
	D001	48E22916S01	DIO, 1SS133-T-77 -AX
	D002	48E22916S01	DIO, 1SS133-T-77 -AX
	D003	48E22916S01	DIO, 1SS133-T-77 -AX
	D201	48T68580F03	DIO, SI DSA3A4 -F5
○	D501	48T63462F01	DIO, DAN202K-96 -CP
●	D501	48T63462F01	DIO, DAN202K-96 -CP
	D502	48E22916S01	DIO, 1SS133-T-77 -AX
	D504	48E22916S01	DIO, 1SS133-T-77 -AX
	D801	48T63462F01	DIO, DAN202K-96 -CP
	D803	48E22916S01	DIO, 1SS133-T-77 -AX

NOTE : ○ : For TDM-7577RB Model Only, ● : For TDM-7576R Model Only, Others : Common.

TDM-7577RB/TDM-7576R/TDM-7575RB/ TDM-7574R/TDM-7574RM

Symbol No.	Part No.	Description
D804	48E20758S01	DIO, 11ES2-TA1B2 -AX
D805	48E22916S01	DIO, 1SS133-T-77 -AX
D806	48E22916S01	DIO, 1SS133-T-77 -AX
ZD201	48E25416S01	DIO, ZEN, MTZJ4.7B-AX
ZD801	48T83128F27	DIO, ZEN HZS 9C3L-A5
ZD802	48T83128F25	DIO, ZEN, HZS 9C1L-A5
ZD803	48T83128F25	DIO, ZEN, HZS 9C1L-A5
ZD804	48T83128F14	DIO, ZEN, HZS 7B2L-A5
ZD805	48T83128F04	DIO, ZEN, HZS 6B1L-A5
Coils/Transformer		
L001	25E23608S01	COIL, IND, 4R7K -AX
L002	24E24202S01	COIL, IND 150K -AX
L501	24T65110W04	COIL, IND LK2125 R10-CP
L801	24E27607S01	CHOKE TRANS
L802	24T16403W23	COIL, IND, 4R7M, K -CP
L803	24T65110W04	COIL, IND LK2125 R10-CP
Crystals		
XL001	91E24846S01	XTL, HC-49/U-S 7.2MHz
XL002	91E27606S01	XTL, HC-49/U-S 4.332MHz
XL501	91E30717S01	XTL, HC-49/U-S4.9152MHz
Filter		
LPF001	91T75257W02	LPF11830KH-3C-DB
Surge Protector		
DSP001	48T81909F01	PTT, DSP-201M-A1
Switch		
SW501	40E30695S01	SW, TACT (1101VA) (RESET)
Capacitors		
C001	08E08577S04	CAP, CER. 273-K-CP 50V
C002	08E26532S01	CAP, CER. 104-K-CP 50V
C003	08E08577S04	CAP, CER. 273-K-CP 50V
C004	08E08577S04	CAP, CER. 273-K-CP 50V
C005	08E22083S01	CAP, CER. 103-K-CP 50V

Symbol No.	Part No.	Description
C006	08E22083S01	CAP, CER. 103-K-CP 50V
C007	08E22435S01	CAP, TF, MMTS 104-J-RD
C008	08E22083S01	CAP, CER. 103-K-CP 50V
C009	08E22938S01	CAP, TF, MMTS 473-J-RD
C010	08E22085S01	CAP, CER. 223-K-CP 50V
C012	08E22083S01	CAP, CER. 103-K-CP 50V
C013	08E27616S01	CAP, TF, MMTS 334-J-RD
C014	08E22083S01	CAP, CER. 103-K-CP 50V
C015	08E22081S01	CAP, CER. 102-J-CP 50V
C016	08E22081S01	CAP, CER. 102-J-CP 50V
C017	08E22081S01	CAP, CER. 102-J-CP 50V
C018	08E22081S01	CAP, CER. 102-J-CP 50V
C021	08E23580S01	CAP, CER. 240-J-CP 50V
C022	08E23579S01	CAP, CER. 180-J-CP 50V
C023	08E08423S05	CAP, CER. 300-J-CP 50V
C024	08E08423S05	CAP, CER. 300-J-CP 50V
C025	08E22085S01	CAP, CER. 223-K-CP 50V
C026	08E22083S01	CAP, CER. 103-K-CP 50V
C027	08E22079S01	CAP, CER. 331-J-CP 50V
C028	08E27612S01	CAP, CER. 561-J-CP 50V
C029	08E22090S01	CAP, CER. 103-K-CP 50V
C030	08E22511S01	CAP, CER. 821-J-CP 50V
C031	08E26532S01	CAP, CER. 104-K-CP 50V
C032	08E26532S01	CAP, CER. 104-K-CP 50V
C201	08E22083S01	CAP, CER. 103-K-CP 50V
C202	08E22086S01	CAP, CER. 333-K-CP 50V
C203	08E22086S01	CAP, CER. 333-K-CP 50V
C204	08E23599S01	CAP, CER. 562-K-CP 50V
C205	08E23599S01	CAP, CER. 562-K-CP 50V
C210	08E22899S01	CAP, CER. 101-J-CP 50V
C219	08E26532S01	CAP, CER. 104-K-CP 50V
C223	08E22090S01	CAP, CER. 103-K-CP 50V
C224	08T95466W07	CAP, CER. 103K-B2J-CP
○ C501	08E26532S01	CAP, CER. 104-K-CP 50V
● C501	08E26532S01	CAP, CER. 104-K-CP 50V
○ C503	08E08577S02	CAP, CER. 152-K-CP 50V
● C503	08E08577S02	CAP, CER. 152-K-CP 50V
C504	08E22085S01	CAP, CER. 223-K-CP 50V
C505	08E23580S01	CAP, CER. 240-J-CP 50V
C506	08E08423S04	CAP, CER. 270-J-CP 50V
C507	08E22083S01	CAP, CER. 103-K-CP 50V
○ C508	08E22085S01	CAP, CER. 223-K-CP 50V
● C508	08E22085S01	CAP, CER. 223-K-CP 50V
△ C509	08E22899S01	CAP, CER. 101-J-CP 50V
□ C509	08E22899S01	CAP, CER. 101-J-CP 50V
■ C509	08E22899S01	CAP, CER. 101-J-CP 50V
C510	08E22899S01	CAP, CER. 101-J-CP 50V
C512	08E22085S01	CAP, CER. 223-K-CP 50V
C513	08E22079S01	CAP, CER. 331-J-CP 50V

NOTE : ○ : For TDM-7577RB Model Only, ● : For TDM-7576R Model Only,
△ : For TDM-7575RB Model Only, □ : For TDM-7574R Model Only,
■ : For TDM-7574RM Model Only, Others : Common.

	Symbol No.	Part No.	Description
	C801	08E22085S01	CAP, CER. 223-K-CP 50V
	C806	08E28530S01	CAP, TF, MMTS 274-J-RD
	C808	08T95466W07	CAP, CER. 103K-B2J-CP
	C810	08E22090S01	CAP, CER. 103-K-CP 50V
	C811	08T95466W07	CAP, CER. 103K-B2J-CP
	E001	23E09402S10	CAP, ELEC, 0. 1/50-M -RD
	E002	23E09402S02	CAP, ELEC, 10/16-M -RD
	E003	23E09402S01	CAP, ELEC, 1/50-M -RD
	E004	23E09402S16	CAP, ELEC, 0. 33/50-M-RD
	E005	23E09403S03	CAP, ELEC, 2. 2/35V-M-BP
	E006	23E09402S09	CAP, ELEC, 100/10-M -RD
	E007	23E27615S01	CAP, ELEC, 100/16-M -RD
	E009	23E09402S07	CAP, ELEC, 22/10-M -RD
	E012	23E09402S02	CAP, ELEC, 10/16-M -RD
○	E201	23E09402S02	CAP, ELEC, 10/16-M -RD
●	E201	23E09402S02	CAP, ELEC, 10/16-M -RD
	E208	23E09402S01	CAP, ELEC, 1/50-M -RD
	E209	23E09402S03	CAP, ELEC, 0. 68/50-M-RD
	E210	23E09402S03	CAP, ELEC, 0. 68/50-M-RD
	E211	23E09402S02	CAP, ELEC, 10/16-M -RD
	E212	23E09402S02	CAP, ELEC, 10/16-M -RD
	E213	23E09402S12	CAP, ELEC, 47/10-M -RD
	E214	23E09402S09	CAP, ELEC, 100/10-M -RD
	E215	23E09402S03	CAP, ELEC, 0. 68/50-M-RD
	E216	23E09402S03	CAP, ELEC, 0. 68/50-M-RD
	E218	23E09402S09	CAP, ELEC, 100/10-M -RD
	E219	23E09402S02	CAP, ELEC, 10/16-M -RD
	E220	23E09402S02	CAP, ELEC, 10/16-M -RD
	E221	23E09402S02	CAP, ELEC, 10/16-M -RD
	E222	23E09402S02	CAP, ELEC, 10/16-M -RD
	E223	23E09402S02	CAP, ELEC, 10/16-M -RD
	E224	23E09402S02	CAP, ELEC, 10/16-M -RD
	E225	23T95115W02	CAP, ELEC-1/50 AD -RD
	E226	23T95115W02	CAP, ELEC-1/50 AD -RD
	E227	23T95115W02	CAP, ELEC-1/50 AD -RD
	E228	23T95115W02	CAP, ELEC-1/50 AD -RD
	E229	23E09402S02	CAP, ELEC, 10/16-M -RD
	E230	23E09551S01	CAP, ELEC KMG 3300/16
	E232	23E09402S07	CAP, ELEC, 22/10-M -RD
	E241	23E09402S03	CAP, ELEC, 0. 68/50-M-RD
	E242	23E09402S03	CAP, ELEC, 0. 68/50-M-RD
	E501	23E09402S02	CAP, ELEC, 10/16-M -RD
	E503	23E09402S09	CAP, ELEC, 100/10-M -RD
	E802	23E09402S02	CAP, ELEC, 10/16-M -RD
	E803	23E08383S08	CAP, ELEC, 10/16-M -RD
	E805	23E09402S02	CAP, ELEC, 10/16-M -RD
	E806	23E08383S18	CAP, ELEC, 0. 1/50-M -RD
	E807	23E09402S01	CAP, ELEC, 1/50-M -RD
	E808	23E08383S08	CAP, ELEC, 10/16-M -RD

	Symbol No.	Part No.	Description
	Resistors		
	CJ001	06E20905S01	RES, CF, 0R0-J-1/10-CP
	CJ002	06E20905S01	RES, CF, 0R0-J-1/10-CP
	CJ003	06E20905S01	RES, CF, 0R0-J-1/10-CP
	CJ004	06E20905S01	RES, CF, 0R0-J-1/10-CP
	CJ005	06E20905S01	RES, CF, 0R0-J-1/10-CP
	CJ006	06E20905S01	RES, CF, 0R0-J-1/10-CP
	CJ007	06E20905S01	RES, CF, 0R0-J-1/10-CP
	CJ008	06E20905S01	RES, CF, 0R0-J-1/10-CP
	CJ009	06E20905S01	RES, CF, 0R0-J-1/10-CP
	CJ010	06E20905S01	RES, CF, 0R0-J-1/10-CP
	CJ011	06E20905S01	RES, CF, 0R0-J-1/10-CP
	CJ012	06E20905S01	RES, CF, 0R0-J-1/10-CP
	CJ013	06E20905S01	RES, CF, 0R0-J-1/10-CP
	CJ101	06E22039S01	RES, CF, 0R0-J-1/8 -CP
	CJ102	06E22039S01	RES, CF, 0R0-J-1/8 -CP
	CJ103	06E22039S01	RES, CF, 0R0-J-1/8 -CP
	CJ104	06E22039S01	RES, CF, 0R0-J-1/8 -CP
	CJ105	06E22039S01	RES, CF, 0R0-J-1/8 -CP
	CJ106	06E22039S01	RES, CF, 0R0-J-1/8 -CP
	CJ107	06E22039S01	RES, CF, 0R0-J-1/8 -CP
	CJ108	06E22039S01	RES, CF, 0R0-J-1/8 -CP
	CJ109	06E22039S01	RES, CF, 0R0-J-1/8 -CP
	CJ110	06E22039S01	RES, CF, 0R0-J-1/8 -CP
	CJ111	06E22039S01	RES, CF, 0R0-J-1/8 -CP
	CJ112	06E22039S01	RES, CF, 0R0-J-1/8 -CP
	CJ113	06E22039S01	RES, CF, 0R0-J-1/8 -CP
	CJ114	06E22039S01	RES, CF, 0R0-J-1/8 -CP
○	CJ115	06E22039S01	RES, CF, 0R0-J-1/8 -CP
●	CJ115	06E22039S01	RES, CF, 0R0-J-1/8 -CP
	CJ116	06E22039S01	RES, CF, 0R0-J-1/8 -CP
	CJ117	06E22039S01	RES, CF, 0R0-J-1/8 -CP
	CJ118	06E22039S01	RES, CF, 0R0-J-1/8 -CP
	CJ119	06E22039S01	RES, CF, 0R0-J-1/8 -CP
	CJ120	06E22039S01	RES, CF, 0R0-J-1/8 -CP
	CJ121	06E22039S01	RES, CF, 0R0-J-1/8 -CP
	CJ122	06E22039S01	RES, CF, 0R0-J-1/8 -CP
	CJ123	06E22039S01	RES, CF, 0R0-J-1/8 -CP
	CJ124	06E22039S01	RES, CF, 0R0-J-1/8 -CP
	CJ125	06E22039S01	RES, CF, 0R0-J-1/8 -CP
	CJ126	06E22039S01	RES, CF, 0R0-J-1/8 -CP
	CJ127	06E22039S01	RES, CF, 0R0-J-1/8 -CP
	CJ128	06E22039S01	RES, CF, 0R0-J-1/8 -CP
	CJ129	06E22039S01	RES, CF, 0R0-J-1/8 -CP
	CJ130	06E22039S01	RES, CF, 0R0-J-1/8 -CP
○	CJ131	06E22039S01	RES, CF, 0R0-J-1/8 -CP
●	CJ131	06E22039S01	RES, CF, 0R0-J-1/8 -CP
	CJ132	06E22039S01	RES, CF, 0R0-J-1/8 -CP

NOTE : ○ : For TDM-7577RB Model Only, ● : For TDM-7576R Model Only, Others : Common.

TDM-7577RB/TDM-7576R/TDM-7575RB/ TDM-7574R/TDM-7574RM

Symbol No.	Part No.	Description
	CJ133	06E22039S01	RES, CF, 0R0-J-1/8 -CP
	CJ134	06E22039S01	RES, CF, 0R0-J-1/8 -CP
	CJ135	06E22039S01	RES, CF, 0R0-J-1/8 -CP
	CJ136	06E22039S01	RES, CF, 0R0-J-1/8 -CP
	CJ137	06E22039S01	RES, CF, 0R0-J-1/8 -CP
	CJ138	06E22039S01	RES, CF, 0R0-J-1/8 -CP
○	CJ139	06E22039S01	RES, CF, 0R0-J-1/8 -CP
●	CJ139	06E22039S01	RES, CF, 0R0-J-1/8 -CP
	L004	06E22039S01	RES, CF, 0R0-J-1/8-CP
	L005	06E22039S01	RES, CF, 0R0-J-1/8-CP
	L502	06E20905S01	RES, CF, 0R0-J-1/10-CP
	R001	06E22951S01	RES, CF, 302-J-1/10-CP
	R002	06E20062S01	RES, CF, 103-J-1/8 -AX
	R003	06E22546S01	RES, CF, 513-J-1/10-CP
	R004	06E22055S01	RES, CF, 472-J-1/10-CP
	R005	06E20066S01	RES, CF, 683-J-1/8 -AX
	R007	06E20904S01	RES, CF, 273-J-1/10-CP
	R008	06E22059S01	RES, CF, 183-J-1/10-CP
	R009	06E22064S01	RES, CF, 683-J-1/10-CP
	R010	06E27611S01	RES, CF, 753-J-1/10-CP
	R011	06E22924S01	RES, CF, 242-J-1/10-CP
	R012	06E22048S01	RES, CF, 102-J-1/10-CP
	R013	06E22048S01	RES, CF, 102-J-1/10-CP
	R014	06E22058S01	RES, CF, 123-J-1/10-CP
	R015	06E22058S01	RES, CF, 123-J-1/10-CP
	R016	06E22048S01	RES, CF, 102-J-1/10-CP
	R017	06E22048S01	RES, CF, 102-J-1/10-CP
	R018	06E22051S01	RES, CF, 222-J-1/10-CP
	R019	06E22051S01	RES, CF, 222-J-1/10-CP
	R020	06E22035S01	RES, CF, 183-J-1/8 -CP
	R021	06E22041S01	RES, CF, 101-J-1/10-CP
	R022	06E22060S01	RES, CF, 223-J-1/10-CP
	R023	06E22048S01	RES, CF, 102-J-1/10-CP
	R025	06E22115S01	RES, CF, 101-J-1/4 -CP
	R026	06E29111S01	RES, CF, 222-J-1/8 -AX
	R027	06E20903S01	RES, CF, 103-J-1/10-CP
	R028	06E20903S01	RES, CF, 103-J-1/10-CP
	R029	06E20903S01	RES, CF, 103-J-1/10-CP
	R030	06E22051S01	RES, CF, 222-J-1/10-CP
	R032	06E22030S01	RES, CF, 102-J-1/8 -CP
	R033	06E20903S01	RES, CF, 103-J-1/10-CP
	R034	06E20903S01	RES, CF, 103-J-1/10-CP
	R036	06E22048S01	RES, CF, 102-J-1/10-CP
	R037	06E22030S01	RES, CF, 102-J-1/8 -CP
	R038	06E22037S01	RES, CF, 104-J-1/8 -CP
	R039	06E22041S01	RES, CF, 101-J-1/10-CP
	R040	06E23575S01	RES, CF, 334-J-1/10-CP
	R041	06E22058S01	RES, CF, 123-J-1/10-CP
	R042	06E20903S01	RES, CF, 103-J-1/10-CP

Symbol No.	Part No.	Description
	R043	06E22066S01	RES, CF, 224-J-1/10-CP
	R045	06E22062S01	RES, CF, 473-J-1/10-CP
	R046	06E22062S01	RES, CF, 473-J-1/10-CP
	R051	06E20903S01	RES, CF, 103-J-1/10-CP
	R201	06E22052S01	RES, CF, 272-J-1/10-CP
	R202	06E22062S01	RES, CF, 473-J-1/10-CP
	R203	06E22891S01	RES, CF, 333-J-1/8 -CP
	R204	06E22061S01	RES, CF, 333-J-1/10-CP
	R205	06E22062S01	RES, CF, 473-J-1/10-CP
	R206	06E22062S01	RES, CF, 473-J-1/10-CP
	R207	06E22062S01	RES, CF, 473-J-1/10-CP
○	R208	06E22051S01	RES, CF, 222-J-1/10-CP
●	R208	06E22051S01	RES, CF, 222-J-1/10-CP
○	R209	06E22055S01	RES, CF, 472-J-1/10-CP
●	R209	06E22055S01	RES, CF, 472-J-1/10-CP
	R218	06E20903S01	RES, CF, 103-J-1/10-CP
	R219	06E20903S01	RES, CF, 103-J-1/10-CP
	R220	06E22507S01	RES, CF, 153-J-1/10-CP
	R221	06E22507S01	RES, CF, 153-J-1/10-CP
○	R222	06E22060S01	RES, CF, 223-J-1/10-CP
●	R222	06E22060S01	RES, CF, 223-J-1/10-CP
○	R223	06E22060S01	RES, CF, 223-J-1/10-CP
●	R223	06E22060S01	RES, CF, 223-J-1/10-CP
○	R224	06E22042S01	RES, CF, 221-J-1/10-CP
●	R224	06E22042S01	RES, CF, 221-J-1/10-CP
○	R225	06E22042S01	RES, CF, 221-J-1/10-CP
●	R225	06E22042S01	RES, CF, 221-J-1/10-CP
△	R226	06E24189S01	RES, CF, 151-J-1/10-CP
□	R226	06E24189S01	RES, CF, 151-J-1/10-CP
■	R226	06E24189S01	RES, CF, 151-J-1/10-CP
△	R227	06E24189S01	RES, CF, 151-J-1/10-CP
□	R227	06E24189S01	RES, CF, 151-J-1/10-CP
■	R227	06E24189S01	RES, CF, 151-J-1/10-CP
	R228	06E22060S01	RES, CF, 223-J-1/10-CP
	R229	06E22060S01	RES, CF, 223-J-1/10-CP
	R230	06E22041S01	RES, CF, 101-J-1/10-CP
	R231	06E22041S01	RES, CF, 101-J-1/10-CP
	R232	06E23834S01	RES, CHIP1/10W-F-8.2K
	R233	06E23834S01	RES, CHIP1/10W-F-8.2K
	R234	06E23834S01	RES, CHIP1/10W-F-8.2K
	R235	06E23834S01	RES, CHIP1/10W-F-8.2K
	R236	06E23888S01	RES, CHIP 1/10W-F-22K
	R237	06E23888S01	RES, CHIP 1/10W-F-22K
	R238	06E23888S01	RES, CHIP 1/10W-F-22K
	R239	06E23888S01	RES, CHIP 1/10W-F-22K
	R240	06E28792S01	RES, CF, 123-J-1/16-CP
	R241	06E28792S01	RES, CF, 123-J-1/16-CP
	R242	06E28792S01	RES, CF, 123-J-1/16-CP
	R243	06E28792S01	RES, CF, 123-J-1/16-CP

NOTE : ○ : For TDM-7577RB Model Only, ● : For TDM-7576R Model Only,
△ : For TDM-7575RB Model Only, □ : For TDM-7574R Model Only,
■ : For TDM-7574RM Model Only, Others : Common.

	Symbol No.	Part No.	Description
	R244	06E22042S01	RES, CF, 221-J-1/10-CP
	R245	06E22033S01	RES, CF, 472-J-1/8 -CP
	R246	06E26014S01	RES, CF, 103-J-1/8 -CP
	R247	06E26014S01	RES, CF, 103-J-1/8 -CP
	R248	06E22054S01	RES, CF, 392-J-1/10-CP
	R249	06E22054S01	RES, CF, 392-J-1/10-CP
	R250	06E22039S01	RES, CF, 0R0-J-1/8 -CP
	R251	06E23257S01	RES, CF, 561-J-1/8 -CP
	R252	06E28534S01	RES, CF, 103-J-1/16-CP
	R253	06E28534S01	RES, CF, 103-J-1/16-CP
	R254	06E28534S01	RES, CF, 103-J-1/16-CP
	R256	06E28534S01	RES, CF, 103-J-1/16-CP
	R501	06E20053S01	RES, CF, 102-J-1/8 -AX
	R502	06E20053S01	RES, CF, 102-J-1/8 -AX
	R503	06E20053S01	RES, CF, 102-J-1/8 -AX
	R504	06E20053S01	RES, CF, 102-J-1/8 -AX
	R505	06E20053S01	RES, CF, 102-J-1/8 -AX
	R506	06E20053S01	RES, CF, 102-J-1/8 -AX
	R507	06E20053S01	RES, CF, 102-J-1/8 -AX
	R508	06E20053S01	RES, CF, 102-J-1/8 -AX
	R510	06E20903S01	RES, CF, 103-J-1/10-CP
	R511	06E20903S01	RES, CF, 103-J-1/10-CP
	R512	06E20903S01	RES, CF, 103-J-1/10-CP
	R513	06E20903S01	RES, CF, 103-J-1/10-CP
○	R514	06E22053S01	RES, CF, 332-J-1/10-CP
●	R514	06E22053S01	RES, CF, 332-J-1/10-CP
○	R515	06E22051S01	RES, CF, 222-J-1/10-CP
●	R515	06E22051S01	RES, CF, 222-J-1/10-CP
○	R516	06E22041S01	RES, CF, 101-J-1/10-CP
●	R516	06E22041S01	RES, CF, 101-J-1/10-CP
○	R518	06E20903S01	RES, CF, 103-J-1/10-CP
●	R518	06E20903S01	RES, CF, 103-J-1/10-CP
○	R519	06E22060S01	RES, CF, 223-J-1/10-CP
●	R519	06E22060S01	RES, CF, 223-J-1/10-CP
○	R520	06E22060S01	RES, CF, 223-J-1/10-CP
●	R520	06E22060S01	RES, CF, 223-J-1/10-CP
	R521	06E22060S01	RES, CF, 223-J-1/10-CP
	R522	06E22055S01	RES, CF, 472-J-1/10-CP
○	R523	06E22051S01	RES, CF, 222-J-1/10-CP
●	R523	06E22051S01	RES, CF, 222-J-1/10-CP
	R524	06E22052S01	RES, CF, 272-J-1/10-CP
	R525	06E22656S01	RES, CF, 682-J-1/8 -CP
○	R526	06E22055S01	RES, CF, 472-J-1/10-CP
●	R526	06E22055S01	RES, CF, 472-J-1/10-CP
	R527	06E22036S01	RES, CF, 223-J-1/8 -CP
	R528	06E22062S01	RES, CF, 473-J-1/10-CP
	R529	06E22048S01	RES, CF, 102-J-1/10-CP
	R530	06E22048S01	RES, CF, 102-J-1/10-CP
	R531	06E22062S01	RES, CF, 473-J-1/10-CP

	Symbol No.	Part No.	Description
	R533	06E22065S01	RES, CF, 104-J-1/10-CP
	R534	06E22066S01	RES, CF, 224-J-1/10-CP
	R536	06E22030S01	RES, CF, 102-J-1/8 -CP
	R537	06E22062S01	RES, CF, 473-J-1/10-CP
	R538	06E22048S01	RES, CF, 102-J-1/10-CP
	R539	06E22048S01	RES, CF, 102-J-1/10-CP
	R540	06E22048S01	RES, CF, 102-J-1/10-CP
	R541	06E22048S01	RES, CF, 102-J-1/10-CP
	R542	06E22062S01	RES, CF, 473-J-1/10-CP
	R543	06E20903S01	RES, CF, 103-J-1/10-CP
	R544	06E22065S01	RES, CF, 104-J-1/10-CP
	R545	06E22546S01	RES, CF, 513-J-1/10-CP
	R546	06E22048S01	RES, CF, 102-J-1/10-CP
○	R548	06E20752S01	RES, CF, 221-J-1/4 -CP
●	R548	06E20752S01	RES, CF, 221-J-1/4 -CP
○	R550	06E26014S01	RES, CF, 103-J-1/8 -CP
●	R550	06E26014S01	RES, CF, 103-J-1/8 -CP
○	R551	06E26014S01	RES, CF, 103-J-1/8 -CP
●	R551	06E26014S01	RES, CF, 103-J-1/8 -CP
	R553	06E20053S01	RES, CF, 102-J-1/8 -AX
	R554	06E22062S01	RES, CF, 473-J-1/10-CP
	R555	06E22921S01	RES, CF, 473-J-1/8 -CP
	R556	06E20752S01	RES, CF, 221-J-1/4 -CP
	R557	06E22060S01	RES, CF, 223-J-1/10-CP
	R558	06E22036S01	RES, CF, 223-J-1/8 -CP
	R559	06E22060S01	RES, CF, 223-J-1/10-CP
	R801	06E26014S01	RES, CF, 103-J-1/8 -CP
	R802	06E22075S01	RES, CF, 152-J-1/4 -CP
	R803	06E22075S01	RES, CF, 152-J-1/4 -CP
	R804	06E22548S01	RES, CF, 471-J-1/4 -CP
	R805	06E23734S01	RES, CF, 751-J-1/8 -CP
	R806	06E23859S01	RES, CF, 391-J-1/4 -CP
	R808	06E23596S01	RES, CF, 8R2-J-1/4 -CP
	R809	06E23596S01	RES, CF, 8R2-J-1/4 -CP
	R810	06E23596S01	RES, CF, 8R2-J-1/4 -CP
	R811	06E26014S01	RES, CF, 103-J-1/8 -CP
	R812	06E20903S01	RES, CF, 103-J-1/10-CP
	R813	06E20903S01	RES, CF, 103-J-1/10-CP
	R814	06E22076S01	RES, CF, 222-J-1/4 -CP
	R815	06E20903S01	RES, CF, 103-J-1/10-CP
	R816	06E22075S01	RES, CF, 152-J-1/4 -CP
	R817	06E22033S01	RES, CF, 472-J-1/8 -CP
	R818	06E22033S01	RES, CF, 472-J-1/8 -CP
	R819	06E22032S01	RES, CF, 392-J-1/8 -CP
	R820	06E22051S01	RES, CF, 222-J-1/10-CP
	R821	06E20903S01	RES, CF, 103-J-1/10-CP
	R822	06E20053S01	RES, CF, 102-J-1/8 -AX
	R823	06E26014S01	RES, CF, 103-J-1/8 -CP
	R824	06E23596S01	RES, CF, 8R2-J-1/4 -CP

NOTE : ○ : For TDM-7577RB Model Only, ● : For TDM-7576R Model Only, Others : Common.

TDM-7577RB/TDM-7576R/TDM-7575RB/ TDM-7574R/TDM-7574RM

Symbol No.	Part No.	Description
R825	06E22075S01	RES, CF, 152-J-1/4 -CP
Connectors		
CB201	09T55554W70	BTB, IMSA9161B-20-DS
○ CB501	09E11155S01	CONN BASE, GIL-S-03P-S2T2
● CB501	09E11155S01	CONN BASE, GIL-S-03P-S2T2
○△Front P.W.Board		
IC's		
IC401	51T15186Y01	IC, LC75823W-QT
○ IC402	51T95040W01	IC, SBX8035F-NS
Transistor		
Q401	48T62967F03	TR, DTC124EK-T146-CP
Diodes		
D401	48T85357W01	DIO, 1PS 226-CP
D402	48T85357W01	DIO, 1PS 226-CP
D403	48T85357W01	DIO, 1PS 226-CP
D404	48T85357W01	DIO, 1PS 226-CP
LED's		
LD401	48T65477W02	LED, SML-010LTT87(RED)-CP
LD402	48T35154Y03	LED, BLU EB3804X-R2
LD403	48T35154Y03	LED, BLU EB3804X-R2
LD404	48T35154Y03	LED, BLU EB3804X-R2
LD405	48T35154Y03	LED, BLU EB3804X-R2
LD406	48T35154Y03	LED, BLU EB3804X-R2
LD407	48T35154Y03	LED, BLU EB3804X-R2
LD408	48T35154Y03	LED, BLU EB3804X-R2
LD409	48T35154Y03	LED, BLU EB3804X-R2
LD411	48T35154Y03	LED, BLU EB3804X-R2
LD412	48T25534Y03	LED, AMB AA1111C-CP
LD413	48T35154Y03	LED, BLU EB3804X-R2
LD414	48T35154Y03	LED, BLU EB3804X-R2
LD415	48T35154Y03	LED, BLU EB3804X-R2

Symbol No.	Part No.	Description
Switches		
S401	40T75234W01	SW, TACT SKQNAC-H5(PWR/INTLZ)
S402	40T75234W01	SW, TACT SKQNAC-H5(AUDIO UP)
S403	40T75234W01	SW, TACT SKQNAC-H5(TUNE DN/RWD)
S404	40T75234W01	SW, TACT SKQNAC-H5(MODE/LOUD)
S405	40T75234W01	SW, TACT SKQNAC-H5(AUDIO DOWN)
S406	40T75234W01	SW, TACT SKQNAC-H5 (TUNE/A.ME/PLAY/PAUSE)
S407	40T75234W01	SW, TACT SKQNAC-H5(EJECT)
S408	40T75234W01	SW, TACT SKQNAC-H5(TUNE UP/FWD)
S409	40T75234W01	SW, TACT SKQNAC-H5(SOURCE)
○ S410	40T75234W01	SW, TACT SKQNAC-H5 (TITLE/PROG/BAND)
△ S410	40T75234W01	SW, TACT SKQNAC-H5(PROG/BAND)
S411	40T75234W01	SW, TACT SKQNAC-H5(AF)
S412	40T75234W01	SW, TACT SKQNAC-H5(T. INFO)
○ S413	40T75234W01	SW, TACT SKQNAC-H5(1/NEWS/NRB)
△ S413	40T75234W01	SW, TACT SKQNAC-H5(1/NEWS)
S414	40T75234W01	SW, TACT SKQNAC-H5(2/PTY/P.S.DN)
S415	40T75234W01	SW, TACT SKQNAC-H5(3/P.S.UP)
S416	40T75234W01	SW, TACT SKQNAC-H5(F)
S417	40T75234W01	SW, TACT SKQNAC-H5(6/SCAN)
S418	40T75234W01	SW, TACT SKQNAC-H5(5/RPT)
S419	40T75234W01	SW, TACT SKQNAC-H5 (4/B.SKIP/M.I.X.)
Lamp		
PL401	65T85125W10	LAMP, BLU 9-100-R2
Capacitors		
C401	08E22085S01	CAP, CER. 223-K-CP 50V
C402	08E08423S06	CAP, CER. 681-J-CP 50V
C403	08E26532S01	CAP, CER. 104-K-CP 50V
C404	08E20768S01	CAP, CER. 473-K-CP 50V
C405	08E20768S01	CAP, CER. 473-K-CP 50V
E401	23T25191W42	CAP, E-MF22R-0J-B8-E5
Resistors		
R401	06E21164S01	RES, CF, 152-J-1/10-CP
R402	06E22051S01	RES, CF, 222-J-1/10-CP
R403	06E22053S01	RES, CF, 332-J-1/10-CP
R404	06E22111S01	RES, CF, 562-J-1/10-CP
R405	06E20903S01	RES, CF, 103-J-1/10-CP

NOTE : ○ : For TDM-7577RB Model Only, ● : For TDM-7576R Model Only,
△ : For TDM-7575RB Model Only, Others : Common.

Symbol No.	Part No.	Description
R406	06E21164S01	RES, CF, 152-J-1/10-CP
R407	06E22051S01	RES, CF, 222-J-1/10-CP
R408	06E22053S01	RES, CF, 332-J-1/10-CP
R409	06E22111S01	RES, CF, 562-J-1/10-CP
R410	06E20903S01	RES, CF, 103-J-1/10-CP
R411	06E21164S01	RES, CF, 152-J-1/10-CP
R412	06E22051S01	RES, CF, 222-J-1/10-CP
R413	06E22053S01	RES, CF, 332-J-1/10-CP
R414	06E22111S01	RES, CF, 562-J-1/10-CP
R415	06E20903S01	RES, CF, 103-J-1/10-CP
R416	06E22061S01	RES, CF, 333-J-1/10-CP
R417	06E20903S01	RES, CF, 103-J-1/10-CP
R418	06E20903S01	RES, CF, 103-J-1/10-CP
R419	06E20903S01	RES, CF, 103-J-1/10-CP
R420	06E20903S01	RES, CF, 103-J-1/10-CP
R423	06E22048S01	RES, CF, 102-J-1/10-CP
R424	06E22048S01	RES, CF, 102-J-1/10-CP
R425	06E22048S01	RES, CF, 102-J-1/10-CP
R426	06E22048S01	RES, CF, 102-J-1/10-CP
R427	06E27623S01	RES, CF, 432-J-1/8 -CP
R428	06E27624S01	RES, CF, 622-J-1/8 -CP
R429	06E22062S01	RES, CF, 473-J-1/10-CP
R430	06E23858S01	RES, CF, 15R-J-1/4 -CP
R431	06E23860S01	RES, CF, 392-J-1/4 -CP
R432	06E30907S01	RES, CF, 751-J-1/4 -CP
R433	06E22073S01	RES, CF, 331-J-1/4 -CP
R434	06E22073S01	RES, CF, 331-J-1/4 -CP
R435	06E22058S01	RES, CF, 123-J-1/10-CP
R436	06E22048S01	RES, CF, 102-J-1/10-CP
R437	06E22048S01	RES, CF, 102-J-1/10-CP
R438	06E22065S01	RES, CF, 104-J-1/10-CP
R440	06E30908S01	RES, CF, 162-J-1/4 -CP
R441	06E30907S01	RES, CF, 751-J-1/4 -CP
R442	06E22073S01	RES, CF, 331-J-1/4 -CP
R443	06E22073S01	RES, CF, 331-J-1/4 -CP
R445	06E22041S01	RES, CF, 101-J-1/10-CP
R446	06E22073S01	RES, CF, 331-J-1/4 -CP
R447	06E22073S01	RES, CF, 331-J-1/4 -CP
R448	06E30908S01	RES, CF, 162-J-1/4 -CP
R449	06E30908S01	RES, CF, 162-J-1/4 -CP
R450	06E30907S01	RES, CF, 751-J-1/4 -CP
R451	06E30907S01	RES, CF, 751-J-1/4 -CP
R452	06E22073S01	RES, CF, 331-J-1/4 -CP
R453	06E22073S01	RES, CF, 331-J-1/4 -CP

Symbol No.	Part No.	Description
	●□■Front P.W.Board	
	IC's	
	IC401	51T15186Y01	IC, LC75823W-QT
●	IC402	51T95040W01	IC, SBX8035F-NS
	Transistor	
	Q401	48T62967F03	TR, DTC124EK-T146-CP
	Diodes	
	D401	48T85357W01	DIO, 1PS 226-CP
	D402	48T85357W01	DIO, 1PS 226-CP
	D403	48T85357W01	DIO, 1PS 226-CP
	D404	48T85357W01	DIO, 1PS 226-CP
	LED's	
	LD401	48T65477W02	LED, SML-010LTT87(RED)-CP
●	LD402	48T35154Y04	LED, GRN BG3874X-R2
□	LD402	48T35154Y04	LED, GRN BG3874X-R2
■	LD402	48T35154Y05	LED, AMB AA3874X-R2
●	LD403	48T35154Y04	LED, GRN BG3874X-R2
□	LD403	48T35154Y04	LED, GRN BG3874X-R2
■	LD403	48T35154Y05	LED, AMB AA3874X-R2
●	LD404	48T35154Y01	LED, GRN BG3864X-R2
□	LD404	48T35154Y01	LED, GRN BG3864X-R2
■	LD404	48T35154Y05	LED, AMB AA3874X-R2
●	LD405	48T35154Y01	LED, GRN BG3864X-R2
□	LD405	48T35154Y01	LED, GRN BG3864X-R2
■	LD405	48T35154Y05	LED, AMB AA3874X-R2
●	LD406	48T35154Y04	LED, GRN BG3874X-R2
□	LD406	48T35154Y04	LED, GRN BG3874X-R2
■	LD406	48T35154Y05	LED, AMB AA3874X-R2
●	LD407	48T35154Y01	LED, GRN BG3864X-R2
□	LD407	48T35154Y01	LED, GRN BG3864X-R2
■	LD407	48T35154Y05	LED, AMB AA3874X-R2
●	LD408	48T35154Y01	LED, GRN BG3864X-R2
□	LD408	48T35154Y01	LED, GRN BG3864X-R2
■	LD408	48T35154Y05	LED, AMB AA3874X-R2
●	LD409	48T35154Y04	LED, GRN BG3874X-R2
□	LD409	48T35154Y04	LED, GRN BG3874X-R2
■	LD409	48T35154Y05	LED, AMB AA3874X-R2
●	LD411	48T35154Y01	LED, GRN BG3864X-R2
□	LD411	48T35154Y01	LED, GRN BG3864X-R2

NOTE : ● : For TDM-7576R Model Only, □ : For TDM-7574R Model Only,
■ : For TDM-7574RM Model Only, Others : Common.

TDM-7577RB/TDM-7576R/TDM-7575RB/ TDM-7574R/TDM-7574RM

	Symbol No.	Part No.	Description
■	LD411	48T35154Y05	LED, AMB AA3874X-R2
●	LD412	48T25534Y03	LED, AMB AA1111C-CP
□	LD412	48T25534Y03	LED, AMB AA1111C-CP
■	LD412	48T25534Y02	LED, RED BR1111C-CP
●	LD413	48T35154Y04	LED, GRN BG3874X-R2
□	LD413	48T35154Y04	LED, GRN BG3874X-R2
■	LD413	48T35154Y05	LED, AMB AA3874X-R2
●	LD414	48T35154Y01	LED, GRN BG3864X-R2
□	LD414	48T35154Y01	LED, GRN BG3864X-R2
■	LD414	48T35154Y05	LED, AMB AA3874X-R2
●	LD415	48T35154Y03	LED, BLU EB3804X-R2
□	LD415	48T35154Y01	LED, GRN BG3864X-R2
■	LD415	48T35154Y05	LED, AMB AA3874X-R2
	Switches		
	S401	40T75234W01	SW, TACT SKQNAC-H5 (PWR/INTLZ)
	S402	40T75234W01	SW, TACT SKQNAC-H5 (AUDIO UP)
	S403	40T75234W01	SW, TACT SKQNAC-H5 (TUNE DN/RWD)
	S404	40T75234W01	SW, TACT SKQNAC-H5 (MODE/LOUD)
	S405	40T75234W01	SW, TACT SKQNAC-H5 (AUDIO DOWN)
	S406	40T75234W01	SW, TACT SKQNAC-H5 (TUNE/A.ME/PLAY/PAUSE)
	S407	40T75234W01	SW, TACT SKQNAC-H5 (EJECT)
	S408	40T75234W01	SW, TACT SKQNAC-H5 (TUNE UP/FWD)
	S409	40T75234W01	SW, TACT SKQNAC-H5 (SOURCE)
●	S410	40T75234W01	SW, TACT SKQNAC-H5 (TITLE/PROG/BAND)
□	S410	40T75234W01	SW, TACT SKQNAC-H5 (PROG/BAND)
■	S410	40T75234W01	SW, TACT SKQNAC-H5 (PROG/BAND)
	S411	40T75234W01	SW, TACT SKQNAC-H5 (AF)
	S412	40T75234W01	SW, TACT SKQNAC-H5 (T. INFO)
●	S413	40T75234W01	SW, TACT SKQNAC-H5 (1/NEWS/NRB)
□	S413	40T75234W01	SW, TACT SKQNAC-H5 (1/NEWS)
■	S413	40T75234W01	SW, TACT SKQNAC-H5 (1/NEWS)
	S414	40T75234W01	SW, TACT SKQNAC-H5 (2/PTY/P.S.DN)
	S415	40T75234W01	SW, TACT SKQNAC-H5 (3/P.S.UP)
	S416	40T75234W01	SW, TACT SKQNAC-H5 (F)
	S417	40T75234W01	SW, TACT SKQNAC-H5 (6/SCAN)
	S418	40T75234W01	SW, TACT SKQNAC-H5 (5/RPT)
	S419	40T75234W01	SW, TACT SKQNAC-H5 (4/B.SKIP/M.I.X.)
	Lamps		
●	PL401	65T85125W07	LAMP, GRN 9-100
□	PL401	65T85125W05	LAMP, GRN 9-100-H2
■	PL401	65T85125W09	LAMP, ORG 9-100-H2

	Symbol No.	Part No.	Description
	Capacitors		
	C401	08E22085S01	CAP, CER. 223-K-CP 50V
	C402	08E08423S06	CAP, CER. 681-J-CP 50V
	C403	08E26532S01	CAP, CER. 104-K-CP 50V
	C404	08E20768S01	CAP, CER. 473-K-CP 50V
	C405	08E20768S01	CAP, CER. 473-K-CP 50V
	E401	23T25191W42	CAP, E-MF22R-0J-B8-E5
	Resistors		
	R401	06E21164S01	RES, CF, 152-J-1/10-CP
	R402	06E22051S01	RES, CF, 222-J-1/10-CP
	R403	06E22053S01	RES, CF, 332-J-1/10-CP
	R404	06E22111S01	RES, CF, 562-J-1/10-CP
	R405	06E20903S01	RES, CF, 103-J-1/10-CP
	R406	06E21164S01	RES, CF, 152-J-1/10-CP
	R407	06E22051S01	RES, CF, 222-J-1/10-CP
	R408	06E22053S01	RES, CF, 332-J-1/10-CP
	R409	06E22111S01	RES, CF, 562-J-1/10-CP
	R410	06E20903S01	RES, CF, 103-J-1/10-CP
	R411	06E21164S01	RES, CF, 152-J-1/10-CP
	R412	06E22051S01	RES, CF, 222-J-1/10-CP
	R413	06E22053S01	RES, CF, 332-J-1/10-CP
	R414	06E22111S01	RES, CF, 562-J-1/10-CP
	R415	06E20903S01	RES, CF, 103-J-1/10-CP
	R416	06E22061S01	RES, CF, 333-J-1/10-CP
	R417	06E20903S01	RES, CF, 103-J-1/10-CP
	R418	06E20903S01	RES, CF, 103-J-1/10-CP
	R419	06E20903S01	RES, CF, 103-J-1/10-CP
	R420	06E20903S01	RES, CF, 103-J-1/10-CP
	R423	06E22048S01	RES, CF, 102-J-1/10-CP
	R424	06E22048S01	RES, CF, 102-J-1/10-CP
	R425	06E22048S01	RES, CF, 102-J-1/10-CP
	R426	06E22048S01	RES, CF, 102-J-1/10-CP
	R427	06E27623S01	RES, CF, 432-J-1/8 -CP
	R428	06E27624S01	RES, CF, 622-J-1/8 -CP
	R429	06E22062S01	RES, CF, 473-J-1/10-CP
●	R430	06E25234S01	RES, CF, 13R-J-1/4 -CP
□	R430	06E25234S01	RES, CF, 13R-J-1/4 -CP
■	R430	06E28546S01	RES, CF, 18R-J-1/4 -CP
	R431	06E23860S01	RES, CF, 392-J-1/4 -CP
	R432	06E30721S01	RES, CF, 121R-J-1/4-CP
	R433	06E30722S01	RES, CF, 131R-J-1/4-CP
	R434	06E22072S01	RES, CF, 151R-J-1/4-CP
	R435	06E22058S01	RES, CF, 123-J-1/10-CP
	R436	06E22048S01	RES, CF, 102-J-1/10-CP
	R437	06E22048S01	RES, CF, 102-J-1/10-CP

NOTE : ● : For TDM-7576R Model Only, □ : For TDM-7574R Model Only,
■ : For TDM-7574RM Model Only, Others : Common.

Symbol No.	Part No.	Description
	R438	06E22065S01	RES, CF, 104-J-1/10-CP
●	R440	06E23597S01	RES, CF, 182-J-1/4 -CP
□	R440	06E23597S01	RES, CF, 182-J-1/4 -CP
■	R440	06E23860S01	RES, CF, 392-J-1/4 -CP
	R441	06E30722S01	RES, CF, 131R-J-1/4-CP
	R442	06E30721S01	RES, CF, 121R-J-1/4-CP
	R443	06E24394S01	RES, CF, 161R-J-1/4-CP
	R445	06E22041S01	RES, CF, 101-J-1/10-CP
●	R446	06E30721S01	RES, CF, 121R-J-1/4-CP
□	R446	06E30721S01	RES, CF, 121R-J-1/4-CP
■	R446	06E22072S01	RES, CF, 151R-J-1/4-CP
	R447	06E30721S01	RES, CF, 121R-J-1/4-CP
●	R448	06E23609S01	RES, CF, 122-J-1/4 -CP
□	R448	06E20752S01	RES, CF, 221R-J-1/4-CP
■	R448	06E22073S01	RES, CF, 331-J-1/4 -CP
●	R449	06E23609S01	RES, CF, 122-J-1/4 -CP
□	R449	06E20752S01	RES, CF, 221R-J-1/4-CP
■	R449	06E22073S01	RES, CF, 331-J-1/4 -CP

○●GR Control P.W.Board

IC's

	IC101	51T25451Y01	CXA2560Q-T4 -QE6
	IC501	51T75628W02	BA6285AFP-Y-E2 -SE9

Transistors

	Q101	48T62967F06	TR, DTC114YKA-T146-CP
	Q103	48T62967F06	TR, DTC114YKA-T146-CP
	Q501	48T84366F05	TR, 2SB1243-R-TV2 -RD
	Q502	48T62967F06	TR, DTC114YKA-T146-CP
	Q503	48T62967F06	TR, DTC114YKA-T146-CP
	Q504	48T83835F03	TR, 2SD1859-Q-TV2 -RD

Diodes

	D101	48T81063F01	DIO, CP. MA159 / TX-CP
	D501	48T81063F01	DIO, CP. MA159 / TX-CP
	D502	48T81063F01	DIO, CP. MA159 / TX-CP
	ZD501	48T25766W11	DIO, ZEN. HZS 7A2L -R5

Symbol No.	Part No.	Description

Capacitors

C101	08S82122F55	CAP, CER. 561J-CH1H-CP
C102	08S82122F55	CAP, CER. 561J-CH1H-CP
C103	08S82122F55	CAP, CER. 561J-CH1H-CP
C104	08S82122F55	CAP, CER. 561J-CH1H-CP
C105	08S65128F71	CAP, CER. 153K-B1H -CP
C106	08S65128F71	CAP, CER. 153K-B1H -CP
C107	08S35374W01	CAP, CER 104K-B1E-CP
C108	08S35374W01	CAP, CER 104K-B1E-CP
C109	08S35374W01	CAP, CER 104K-B1E-CP
C110	08T15399W05	CAP, CER. 683K-B1H -CP
C111	08T15399W05	CAP, CER. 683K-B1H -CP
C113	08S35374W01	CAP, CER 104K-B1E-CP
C114	08S35374W01	CAP, CER 104K-B1E-CP
C115	08S35374W01	CAP, CER 104K-B1E-CP
C116	08T15399W05	CAP, CER. 683K-B1H -CP
C501	08S35374W01	CAP, CER 104K-B1E-CP
C502	08S35374W01	CAP, CER 104K-B1E-CP
E101	23S75372W05	CAP, ELY 22R-1C -R2
E102	23S75372W05	CAP, ELY 22R-1C -R2

Resistors

J101	06S53331F39	RES, CP . JUMPER1/8-CP
J102	06S53331F39	RES, CP . JUMPER1/8-CP
J103	06S53331F39	RES, CP . JUMPER1/8-CP
J104	06S53331F39	RES, CP . JUMPER1/8-CP
J105	06S53331F39	RES, CP . JUMPER1/8-CP
J106	06S53331F39	RES, CP . JUMPER1/8-CP
J107	06S53331F39	RES, CP . JUMPER1/8-CP
J108	06S53331F39	RES, CP . JUMPER1/8-CP
J109	06S53331F39	RES, CP . JUMPER1/8-CP
J110	06S53331F39	RES, CP . JUMPER1/8-CP
J111	06S53331F39	RES, CP . JUMPER1/8-CP
J112	06S53331F39	RES, CP . JUMPER1/8-CP
J113	06S53331F39	RES, CP . JUMPER1/8-CP
J114	06S53331F39	RES, CP . JUMPER1/8-CP
J115	06S53331F39	RES, CP . JUMPER1/8-CP
J116	06S53331F39	RES, CP . JUMPER1/8-CP
J117	06S53331F39	RES, CP . JUMPER1/8-CP
J118	06S53331F39	RES, CP . JUMPER1/8-CP
J119	06S64996F39	RES, RK JUMPER 1/8-CP
J120	06S64996F39	RES, RK JUMPER 1/8-CP
J121	06S53331F39	RES, CP . JUMPER1/8-CP
J122	06S53331F39	RES, CP . JUMPER1/8-CP
J123	06S53331F39	RES, CP . JUMPER1/8-CP
J124	06S53331F39	RES, CP . JUMPER1/8-CP
J125	06S53331F39	RES, CP . JUMPER1/8-CP

NOTE : ○ : For TDM-7577RB Model Only,
△ : For TDM-7575RB Model Only,
■ : For TDM-7574RM Model Only,
● : For TDM-7576R Model Only,
□ : For TDM-7574R Model Only,
Others : Common.

TDM-7577RB/TDM-7576R/TDM-7575RB/ TDM-7574R/TDM-7574RM

Symbol No.	Part No.	Description
J126	06S64996F39	RES, RK JUMPER 1/8-CP
J127	06S53331F39	RES, CP . JUMPER1/8-CP
J128	06S53331F39	RES, CP . JUMPER1/8-CP
J129	06S53331F39	RES, CP . JUMPER1/8-CP
J130	06S53331F39	RES, CP . JUMPER1/8-CP
J131	06S64996F39	RES, RK JUMPER 1/8-CP
J132	06S64996F39	RES, RK JUMPER 1/8-CP
J133	06S64996F39	RES, RK JUMPER 1/8-CP
R101	06S64995F35	RES, RK 181J 1/8 -CP
R102	06S64995F35	RES, RK 181J 1/8 -CP
R103	06S64995F83	RES, RK 183J 1/8 -CP
R104	06S64995F95	RES, RK 563J 1/8 -CP
R105	06S64995F78	RES, RK 113J 1/8 -CP
R106	06S64996F26	RES, RK 105J 1/8 -CP
R110	06S70072F29	RES, CP . 101-J-1/4-CP
R111	06S70072F77	RES, CP . 103-J-1/4-CP
R113	06S70072F77	RES, CP . 103-J-1/4-CP
R114	06S70072F77	RES, CP . 103-J-1/4-CP
R507	06S70072F41	RES, CP . 331-J-1/4-CP
R508	06S70072F41	RES, CP . 331-J-1/4-CP
R509	06S64995F77	RES, RK 103J 1/8 -CP
R510	06S70072F60	RES, CP . 202-J-1/4-CP
R511	06S70072F60	RES, CP . 202-J-1/4-CP
R512	06S64996F01	RES, RK 913J 1/8 -CP
R513	06S64996F01	RES, RK 913J 1/8 -CP
R514	06S70072F53	RES, CP . 102-J-1/4-CP
R515	06S81094F09	RES, MF . 4R7-1/2-J-A1
VR101	18T93996F13	VAR, RH0422C 103 +
VR102	18T93996F13	VAR, RH0422C 103 +

Connector

CB101	09T94646F20	BTB, IMSA9110S-20L-DB

△□■GR Control P.W.Board

IC's

IC101	51T25450Y01	CXA2559Q-T4 -QE6
IC501	51T75628W02	BA6285AFP-Y-E2 -SE9

Transistors

Q101	48T62967F06	TR, DTC114YKA-T146-CP
Q103	48T62967F06	TR, DTC114YKA-T146-CP
Q501	48T84366F05	TR, 2SB1243-R-TV2 -RD
Q502	48T62967F06	TR, DTC114YKA-T146-CP
Q503	48T62967F06	TR, DTC114YKA-T146-CP
Q504	48T83835F03	TR, 2SD1859-Q-TV2 -RD

Diodes

D101	48T81063F01	DIO, CP. MA159 / TX-CP
D501	48T81063F01	DIO, CP. MA159 / TX-CP
D502	48T81063F01	DIO, CP. MA159 / TX-CP
ZD501	48T25766W11	DIO, ZEN. HZS 7A2L -R5

Capacitors

C101	08S82122F55	CAP, CER. 561J-CH1H-CP
C102	08S82122F55	CAP, CER. 561J-CH1H-CP
C103	08S82122F55	CAP, CER. 561J-CH1H-CP
C104	08S82122F55	CAP, CER. 561J-CH1H-CP
C105	08S65128F71	CAP, CER. 153K-B1H -CP
C106	08S65128F71	CAP, CER. 153K-B1H -CP
C107	08S35374W01	CAP, CER 104K-B1E-CP
C108	08S35374W01	CAP, CER 104K-B1E-CP
C109	08S35374W01	CAP, CER 104K-B1E-CP
C110	08T15399W05	CAP, CER. 683K-B1H -CP
C111	08T15399W05	CAP, CER. 683K-B1H -CP
C113	08S35374W01	CAP, CER 104K-B1E-CP
C114	08S35374W01	CAP, CER 104K-B1E-CP
C115	08S35374W01	CAP, CER 104K-B1E-CP
C116	08T15399W05	CAP, CER. 683K-B1H -CP
C501	08S35374W01	CAP, CER 104K-B1E-CP
C502	08S35374W01	CAP, CER 104K-B1E-CP
E101	23S75372W05	CAP, ELY 22R-1C -R2
E102	23S75372W05	CAP, ELY 22R-1C -R2

Resistors

J101	06S53331F39	RES, CP . JUMPER1/8-CP
J102	06S53331F39	RES, CP . JUMPER1/8-CP
J103	06S53331F39	RES, CP . JUMPER1/8-CP
J104	06S53331F39	RES, CP . JUMPER1/8-CP
J105	06S53331F39	RES, CP . JUMPER1/8-CP
J106	06S53331F39	RES, CP . JUMPER1/8-CP
J107	06S53331F39	RES, CP . JUMPER1/8-CP
J108	06S53331F39	RES, CP . JUMPER1/8-CP
J109	06S53331F39	RES, CP . JUMPER1/8-CP
J110	06S53331F39	RES, CP . JUMPER1/8-CP
J111	06S53331F39	RES, CP . JUMPER1/8-CP

NOTE : △ : For TDM-7575RB Model Only, □ : For TDM-7574R Model Only,
■ : For TDM-7574RM Model Only, Others : Common.

Symbol No.	Part No.	Description
J112	06S53331F39	RES,CP .JUMPER1/8-CP
J113	06S53331F39	RES,CP .JUMPER1/8-CP
J114	06S53331F39	RES,CP .JUMPER1/8-CP
J115	06S53331F39	RES,CP .JUMPER1/8-CP
J116	06S53331F39	RES,CP .JUMPER1/8-CP
J117	06S53331F39	RES,CP .JUMPER1/8-CP
J118	06S53331F39	RES,CP .JUMPER1/8-CP
J119	06S64996F39	RES,RK JUMPER 1/8-CP
J120	06S64996F39	RES,RK JUMPER 1/8-CP
J121	06S53331F39	RES,CP .JUMPER1/8-CP
J122	06S53331F39	RES,CP .JUMPER1/8-CP
J123	06S53331F39	RES,CP .JUMPER1/8-CP
J124	06S53331F39	RES,CP .JUMPER1/8-CP
J125	06S53331F39	RES,CP .JUMPER1/8-CP
J126	06S64996F39	RES,RK JUMPER 1/8-CP
J127	06S53331F39	RES,CP .JUMPER1/8-CP
J128	06S53331F39	RES,CP .JUMPER1/8-CP
J129	06S53331F39	RES,CP .JUMPER1/8-CP
J130	06S53331F39	RES,CP .JUMPER1/8-CP
J131	06S64996F39	RES,RK JUMPER 1/8-CP
J132	06S64996F39	RES,RK JUMPER 1/8-CP
J133	06S64996F39	RES,RK JUMPER 1/8-CP
R101	06S64995F35	RES,RK 181J 1/8 -CP
R102	06S64995F35	RES,RK 181J 1/8 -CP
R103	06S64995F83	RES,RK 183J 1/8 -CP
R104	06S64995F95	RES,RK 563J 1/8 -CP
R105	06S64995F78	RES,RK 113J 1/8 -CP
R106	06S64996F26	RES,RK 105J 1/8 -CP
R110	06S70072F29	RES,CP .101-J-1/4-CP
R111	06S70072F77	RES,CP .103-J-1/4-CP
R113	06S70072F77	RES,CP .103-J-1/4-CP
R114	06S70072F77	RES,CP .103-J-1/4-CP
R115	06S64995F73	RES,RK 682J 1/8 -CP
R116	06S64995F63	RES,RK 272J 1/8 -CP
R117	06S64995F63	RES,RK 272J 1/8 -CP
R118	06S64995F73	RES,RK 682J 1/8 -CP
R507	06S70072F41	RES,CP .331-J-1/4-CP
R508	06S70072F41	RES,CP .331-J-1/4-CP
R509	06S64995F77	RES,RK 103J 1/8 -CP
R510	06S70072F60	RES,CP .202-J-1/4-CP
R511	06S70072F60	RES,CP .202-J-1/4-CP
R512	06S64996F01	RES,RK 913J 1/8 -CP
R513	06S64996F01	RES,RK 913J 1/8 -CP
R514	06S70072F53	RES,CP .102-J-1/4-CP
R515	06S81094F09	RES,MF .4R7-1/2-J-A1

Symbol No.	Part No.	Description
Connector		
CB101	09T94646F20	BTB, IMSA9110S-20L-DB
Miscellaneous		
ANT001	01E27627S01	ANT JACK
CB202	09E30124S01	RCA JACK 2P(DKJ-22607)
CB203	09T55493W02	DIN, SKT 8P
CB401	09T15299Y15	BTB, TMD-V15X-B1-DB
CB801	09E23591S01	CONN, SK2531-16-S.P-T.T
CH401	09T15298Y15	BTB, TMD-V15P-A1-B
○ ET501	01E30720S01	ASS'Y WIRE(REMOCON JACK)
● ET501	01E30720S01	ASS'Y WIRE(REMOCON JACK)
○ LCD401	65T85130W05	LCD, LUC0379A
● LCD401	65T95241W04	LCD
△ LCD401	65T85130W05	LCD, LUC0379A
□ LCD401	65T95241W04	LCD
■ LCD401	65T95241W04	LCD
○●GR75S25B		
HD101	88T75612W03	HEAD, HAGTR2502A FLX
M501	01V24100Y88	ASSY, SUB MOTOR(7V-370mA)
M502	01V74500W16	ASSY, MOTOR(13.2V-95mA)
PT501	51T63433F03	ON2170-R2 -NB
PT502	51T63433F03	ON2170-R2 -NB
SW501	40T15222W01	SW, DETECTOR(PACK IN)
SW502	40T15382W02	SW, DETCT SPPB32 -DB(PAUSE)
SW503	40T15382W02	SW, DETCT SPPB32 -DB(MODE)
SW504	40T15382W02	SW, DETCT SPPB32 -DB(METAL)
△□■GR75S450		
HD101	88T75612W03	HEAD, HAGTR2502A FLX
M501	01V11700Y92	ASSY, SUB MOTOR(7V-370mA)
M502	01V94900W74	ASSY, MOTOR(13.2V-95mA)
PT501	51T63433F03	ON2170-R2 -NB
PT502	51T63433F03	ON2170-R2 -NB
SW501	40T15222W01	SW, DETECTOR(PACK IN)
SW502	40T15382W02	SW, DETCT SPPB32 -DB(PAUSE)
SW503	40T15382W02	SW, DETCT SPPB32 -DB(MODE)
SW504	40T15382W02	SW, DETCT SPPB32 -DB(METAL)

NOTE : ○ : For TDM-7577RB Model Only, ● : For TDM-7576R Model Only,
△ : For TDM-7575RB Model Only, □ : For TDM-7574R Model Only,
■ : For TDM-7574RM Model Only, Others : Common.

TDM-7577RB/TDM-7576R/TDM-7575RB/ TDM-7574R/TDM-7574RM

Cabinet Assembly Parts List

NOTE:Parts without part number are not supplied.

Symbol No.		Index	Part No.	Description
○	1		01E30553S01	Assy., Nose Unit
●	1		01E30552S01	Assy., Nose Unit
△	1		01E30693S01	Assy., Nose Unit
□	1		01E30549S01	Assy., Nose Unit
■	1		01E30550S01	Assy., Nose Unit
	5		13E30690S01	Assy., Front Escutcheon
	6		64E30906S01	Face, Plate
○	7		81D30430Y01	Cassette Deck Mechanism, GR75S25B
●	7		81D30430Y01	Cassette Deck Mechanism, GR75S25B
△	7		81D30430Y04	Cassette Deck Mechanism, GR75S450
□	7		81D30430Y04	Cassette Deck Mechanism, GR75S450
■	7		81D30430Y04	Cassette Deck Mechanism, GR75S450
	9		03E09416S05	Screw, MCH-TPT (M2.6X6)
	10		03E22117S01	Screw, MCH-TPT (M2.6X8)
	11		03E30227S01	Screw, TPG-TPT (M3X8)
	12		03E22118S01	Screw, MCH-TPT (M2.6X14)
	13		03E27618S01	Screw, TPG-TPT (M2.6X8)
	14		41A00620K01	Spring, Lever Door
	15		45C00553K01	Lever, Door
	16		07E30053S01	Assy., Bracket Side(L)
	17		07E30054S01	Assy., Bracket Side(R)
	20		77E30687S01	FM/MW/LW Tuner Unit, MB4R906Z (TU001)
	21		03E22134S01	Screw, TPG (M1.7X10)
	22		13E30692S01	Nose, Bottom
○	23		13E30685S01	Assy., Nosepiece
●	23		13E30689S01	Assy., Nosepiece
△	23		13E30694S01	Assy., Nosepiece
□	23		13E30686S01	Assy., Nosepiece
■	23		13E30691S01	Assy., Nosepiece
	25		15B00691K01	Cover, LCD
○	26		07A90454W01	Bracket, Remote
●	26		07A90454W01	Bracket, Remote
	27		75T85248W01	Rubber, Electric
	28		26A80485W01	Reflector, Sheet
	29		15C00690K01	Assy., Case LCD

Symbol No.	Index	Part No.	Description

NOTE : ○ : For TDM-7577RB Model Only, ● : For TDM-7576R Model Only,
△ : For TDM-7575RB Model Only, □ : For TDM-7574R Model Only,
■ : For TDM-7574RM Model Only, Others : Common.

Exploded View (Cabinet)

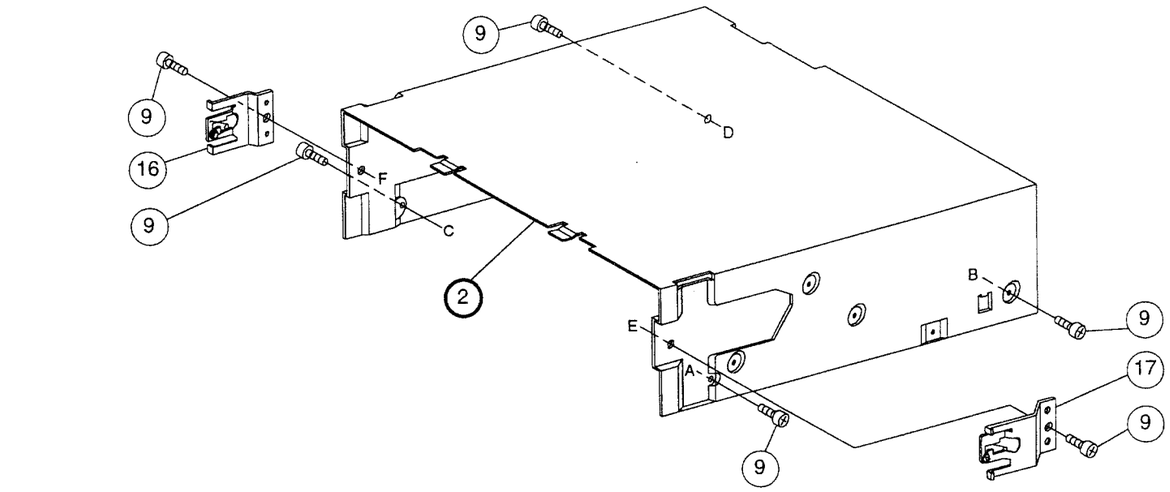

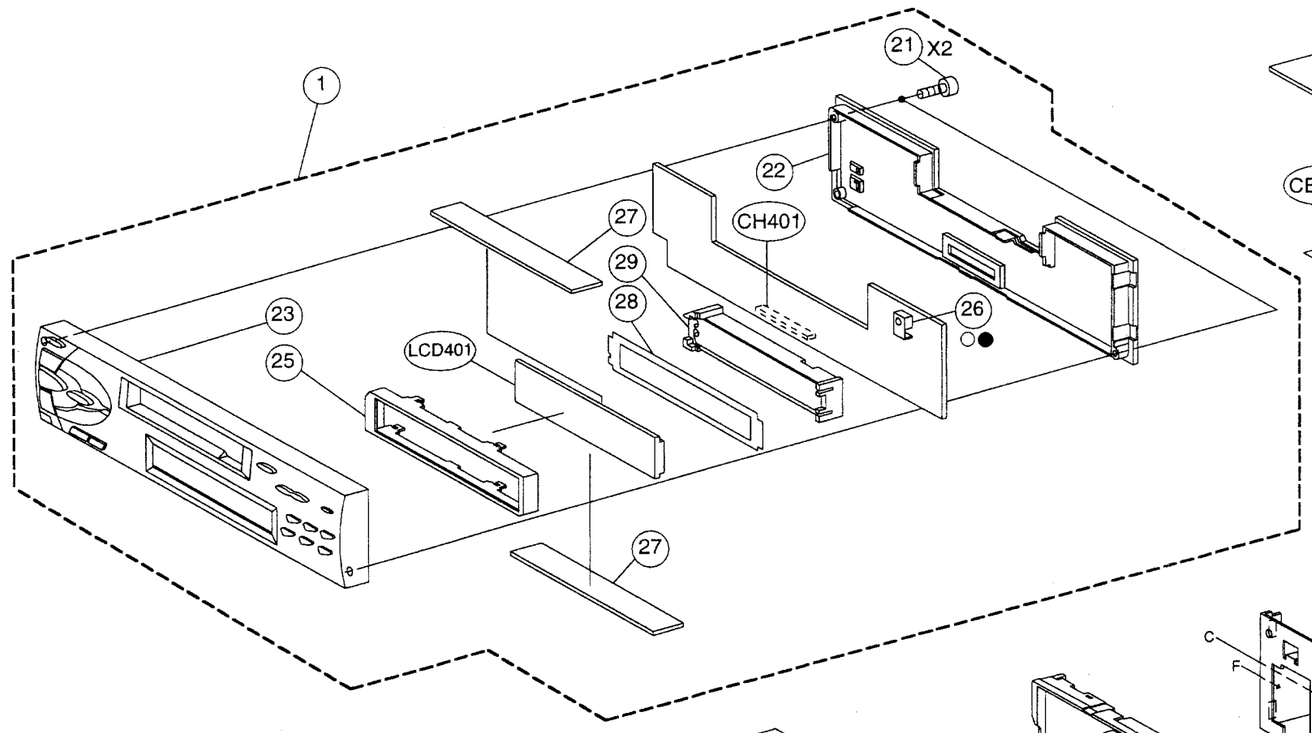

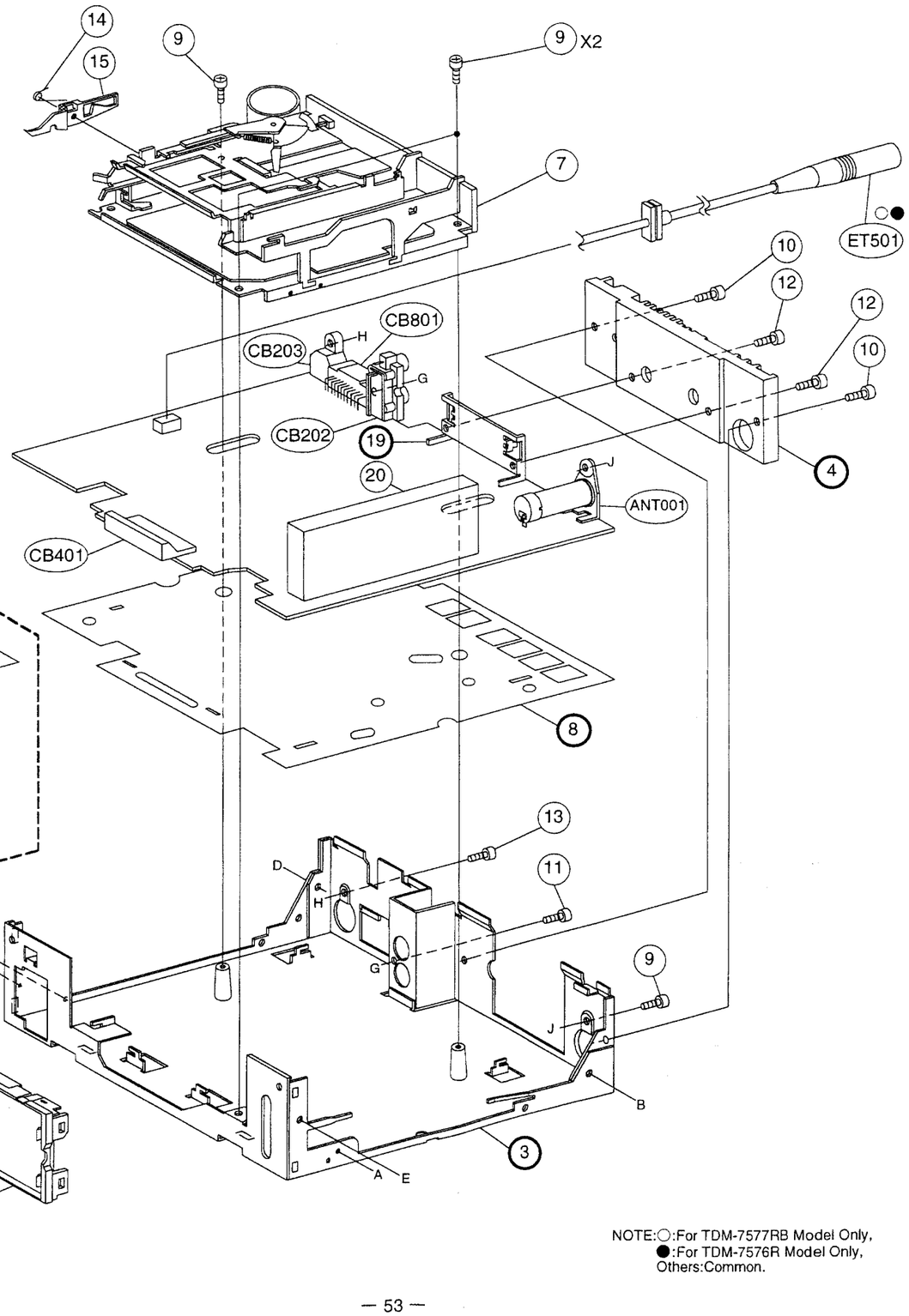

NOTE:○:For TDM-7577RB Model Only,
●:For TDM-7576R Model Only,
Others:Common.

Exploded View (Cassette Deck Mechanism)

(GR75S25B)

(TDM-7577RB/TDM-7576R Model Only)

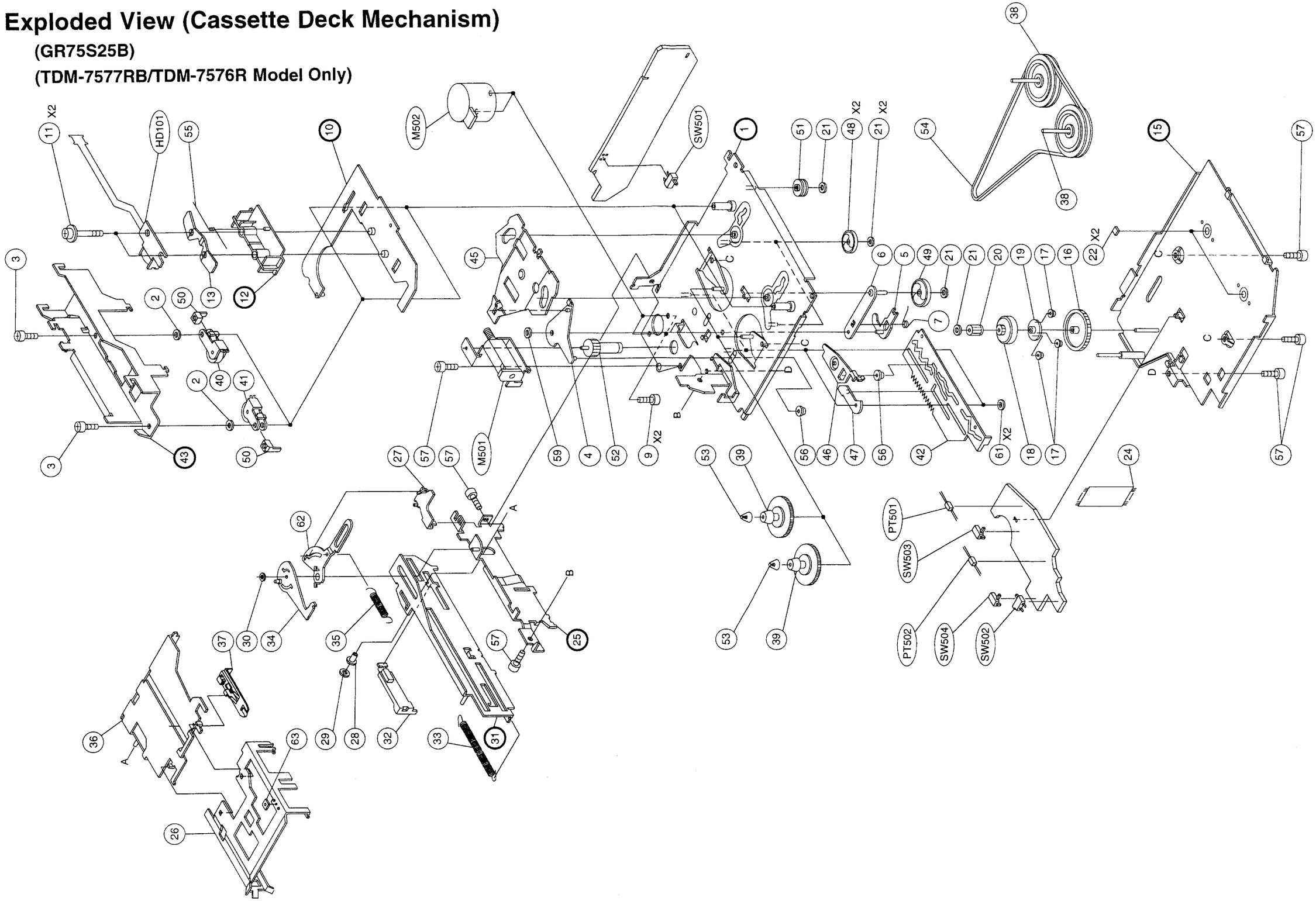

Cassette Deck Mechanism Assembly Parts List
(TDM-7577RB/TDM-7576R Model Only)

NOTE:Parts without part number are not supplied.

Symbol No.	Index	Part No.	Description
2		04B41345P32	Washer, Lock (M3.1)
3		03S94385F80	Screw, Pan Nylok (M1.7X4)
4		01A90342W03	Assy., Riv. Select Swing
5		01A90340W02	Assy., Riv. RF Lever A
6		01A90341W01	Assy., Riv. RF Lever B
7		41A71781W01	Spring, RF
9		03C42723U12	Screw, Cup (M2X2.5)
11		03A80452W02	Screw, F Locks (M2X10.7)
13		41A31756W01	Spring, Head
16		44A71747W01	Gear, Sun
17		44A71748W01	Gear, Planet
18		44A71749W01	Gear, Inner
19		44A71751W01	Pinion, Eject Base
20		44A71752W01	Pinion, Eject
21		04B41345P11	Washer, Lock (M1.2)
22		43A11228Y01	Spacer, NO443
24		30T65174W07	Wire, Flat 10P
26		07B40012W01	Holder, Cassette (D)
27		45A71736W02	Lever, Pack In Switch
28		43A71775W01	Roller, Plate Base
29		04B41345P01	Washer, Lock (M1.2)
30		04B41345P15	Washer, Lock (M1.2)
32		44A71753W01	Rack, GR-S
33		41A80634W01	Spring, Rack
34		01A90346W03	Assy., Riv. Eject Arm (R)
35		41B63283F11	Spring
36		01A40024W03	Assy., Riv. Plate Base
37		45B71750W01	Slider
38		01B90350W01	Assy., Flywheel
39		01B71784W01	Reel
40		01B30863W01	Assy., Pinch Roller
41		01B30863W02	Assy., Pinch Roller
42		44C90318W01	Rack, Mode B
45		45B90320W03	Lever, Select
46		45A71737W01	Lever, Mode Switch
47		45A71733W01	Lever, Lock
48		44A71741W01	Gear, Take Up
49		44A71742W01	Gear, RF
50		43A71743W01	Guide, Pack
51		49A71744W01	Pulley, Idler
52		44A71746W01	Pinion, Motor
53		49A81855W01	Reel, Cap
54		42A71780W02	Belt
55		41A10387W02	Spring, Pinch Roller
56		43A71774W01	Roller, Mode
57		03S44205G30	Screw, Pan (M2.6X4)
59		04B41345P02	Washer, Lock (M1.7)
61		04B41345P23	Washer, Lock (M1.7)
62		45A90322W01	Lever, Eject Arm A
63		43A80018W01	Spacer, Polyslider

TDM-7577RB/TDM-7576R/TDM-7575RB/ TDM-7574R/TDM-7574RM

Cassette Deck Mechanism Assembly Parts List

(TDM-7575RB/TDM-7574R/TDM-7574RM Model Only)

NOTE:Parts without part number are not supplied.

Symbol No.	Index	Part No.	Description
2		04B41345P32	Washer, Lock (M3.1)
3		03S94385F80	Screw, Pan Nylok (M1.7X4)
4		01A90342W02	Assy., Riv. Select Swing
5		01A71714W01	Assy., Riv. RF Lever A
6		01A90341W02	Assy., Riv. RF Lever B
7		41A71781W01	Spring, RF
9		03C42723U12	Screw, Cup (M2X2.5)
11		03A80452W02	Screw, F Locks (M2X10.7)
13		41A31756W01	Spring, Head
16		44A71747W01	Gear, Sun
17		44A71748W02	Gear, Planet
18		44A71749W01	Gear, Inner
19		44A71751W01	Pinion, Eject Base
20		44A71752W01	Pinion, Eject
21		04B41345P11	Washer, Lock (M1.2)
22		43A11228Y01	Spacer, NO443
24		30T65174W07	Wire, Flat 10P
26		07B71778W01	Holder, Cassette
27		45A71736W03	Lever, Pack In Switch
28		43A71775W01	Roller, Plate Base
29		04B41345P01	Washer, Lock (M1.2)
30		04B41345P15	Washer, Lock (M1.2)
32		44A71753W01	Rack, GR-S
33		41A80634W01	Spring, Rack
34		01A90346W02	Assy., Riv. Eject Arm (B)
35		41B63283F11	Spring
36		01A71712W01	Assy., Riv. Plate Base
37		45B71750W02	Slider
38		01B90350W01	Assy., Flywheel
39		01B71784W01	Reel
40		01B30863W01	Assy., Pinch Roller
41		01B30863W02	Assy., Pinch Roller
42		44C90318W02	Rack, Mode B
45		45B90320W02	Lever, Select
46		45A71737W03	Lever, Mode Switch
47		45A71733W03	Lever, Lock
48		44A71741W02	Gear, Take Up
49		44A71742W02	Gear, RF
50		43A71743W02	Guide, Pack
51		49A71744W01	Pulley, Idler
52		44A71746W01	Pinion, Motor
53		49A81855W01	Reel, Cap
54		42A71780W02	Belt
55		41A10387W02	Spring, Pinch Roller
56		43A71774W01	Roller, Mode
57		03S44205G30	Screw, Pan (M2.6X4)
59		04B41345P02	Washer, Lock (M1.7)
61		04B41345P23	Washer, Lock (M1.7)
62		45A90322W02	Lever, Eject Arm A
63		43A80018W01	Spacer, Polyslider

Exploded View (Cassette Deck Mechanism)

(GR75S450)
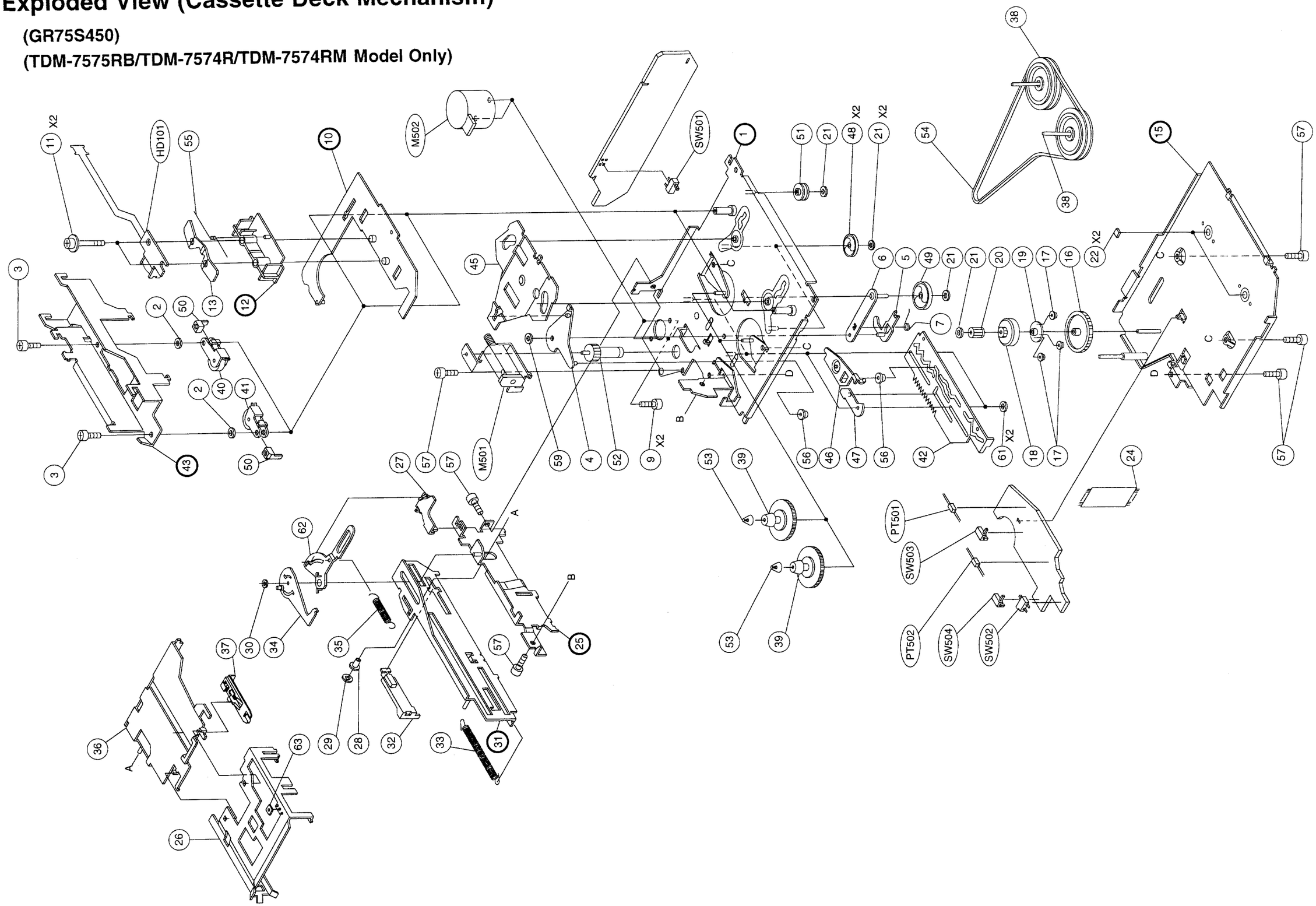
(TDM-7575RB/TDM-7574R/TDM-7574RM Model Only)