S/M Code No.91 - 073 DATE OF ISSUE 8/1991 - I

AIWA®

XD-S260

SERVICE MANUAL

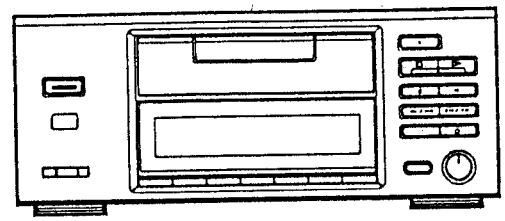

DIGITAL AUDIO TAPE DECK

- BASIC DAT MECHANISM : D - 1MK2
- TYPE. K,Z

TENTATIVE USE ONLY

AIWA Co., Ltd.

Tokyo Japan

Printed in Japan

www.manualscenter.com

SPECIFICATIONS

Tape	Digital audio tape
Head	Rotary head
Recording time	120 minutes (DT-120)
Tape speed	8.15 mm/s (12.225 mm/s)
Drum rotation	2,000 rpm
Error correction system	Double Reed Solomon
Tape Track pitch	13.6 µm (20.4 µm)
Sampling frequencies	48 kHz, 44.1 kHz, 32 kHz
Conversion system	8-10 conversion
Transmission rate	2.46 Mbit/sec
Number of channels	2 channels, stereo
D-A conversion	16 bit linear
Frequency response	2 – 22,000 Hz ±0.5 dB (48 kHz mode)
Signal-to-noise ratio	94 dB (playback) 90dB (recording/playback)
Dynamic range	93 dB (playback) 90dB (recording/playback)
Total harmonic distortion	0.005 % (1 kHz, playback)
Wow and flutter	Under measurable limit (±0.001 % W.PEAK)
Inputs	LINE IN: pin jack input impedance 50 k ohms standard input level –18 dBV COAXIAL IN: pin jack input impedance 75 ohms standard input level 0.5 Vp-p OPTICAL IN: optical link connector
Outputs	LINE OUT: pin jack output impedance 1 k ohm rated output level 2 V load impedance 10 k ohms or more OPTICAL OUT: optical link connector
General	
Power requirements	AH and U: 120/220/240 V AC switchable, AH 50/60 Hz, U 60 Hz Z: 220 V AC, 50 Hz K: 240 V AC, 50 Hz
Power consumption	U, K, Z: 16 W AH: 15 W
Dimensions (W×H×D)	260 × 105 × 313 mm (10 1/4 × 4 1/4 × 12 3/8 inches)
Weight	Approx. 4.0 kg (8.8 lbs)

Bande	Bande audionumérique
Tête	A tête rotative
Durée d'enregistrement	120 minutes (avec cassette DT-120)
Vitesse de bande	8,15 mm/sec. (12,225 mm/sec.)
Rotation du tambour	2.000 t/min.
Correction d'erreur	Double code Solomon de couplage
Pas transversal	13,6 µm (20,4 µm)
Fréquence d'échantillonnage	48 kHz, 44,1 kHz, 32 kHz
Système de modulation	Modulation 8 à 10
Taux de transfert	2,46 Mbit/sec.
Nombre de canaux	2 canaux, stéréo
Conversion N/A	Linéaire à 16 bits
Réponse de fréquence	2 à 22000 Hz ±0,5 dB (mode 48 kHz)
Rapport signal/bruit	94 dB (lecture) 90 dB (enregistrement/lecture)
Plage dynamique	93 dB (lecture) 90 dB (enregistrement/lecture)
Distorsion harmonique totale	0,005% (1 kHz, lecture)
Pleurage et scintillement	Inférieur à la limite mesurable (±0,001% CRETE)
Entrées	LINE IN: Prise à broches impédance d'entrée 50 kohms, niveau d'entrée standard –18 dBV COAXIAL IN: prise à broches impédance d'entrée 75 ohms, niveau d'entrée standard 0,5 Vc-c OPTICAL IN: connecteur de cordon optique
Sorties	LINE OUT: prise à broches impédance de sortie 1 kohm niveau de sortie nominal 2 V impédance de charge 10 kohms ou plus OPTICAL OUT: connecteur de cordon optique
Données générales	
Alimentation	CA 220 V, 50 Hz
Consommation électrique	16 W
Dimensions (l/h/p)	260 x 105 x 313 mm (10 1/4 x 4 1/4 x 12 3/8 pouces)
Poids	Environ 4,0 kg (8,8 livres)

■ACCESSORIES/PACKAGE LIST

PART NO. CHANGED TO	REF. NO.	PART NO.	DESCRIPTION	COMMON MODEL	Q,TY
	1	★80-MQ1-905-310	INSTRUCTION BOOKLET,H (K,Z)	※	1
	2	★80-MQ1-906-110	INSTRUCTION BOOKLET,E (Z)	※	1
	3	★80-MQ1-650-010	DIGITAL OPTICAL LINK	※	2
	4	★87-034-773-010	AUDIO PIN CORD		2
	5	★80-MQ1-646-010	4P FLAT CABLE	※	1
	6	★80-MQ1-023-010	REMOTE CONTROLLER,RC – D260EX	※	1

ELECTRICAL MAIN PARTS LIST

REF.NO.	PART NO.	DESCRIPTION
=== IC ===		
	87-020-883-010	IC,74HCU04
	87-002-248-010	IC,BA15218D
	87-001-440-010	IC,BA15218N
	87-002-214-010	IC,CS5339-KP
	80-MQ1-607-010	IC,CXP5058H-577
	87-002-211-010	IC,GP1F32T(OPTICAL)
	87-002-212-010	IC,GP1F32R(OPTICAL)
	89-HD1-603-010	IC,HA12062AMP
	89-HD1-602-010	IC,HA12133MP
	89-HD1-633-010	IC,HD49211BFS
	89-HD1-604-010	IC,HD49212
	87-001-578-010	IC,HD74HC74
	87-001-800-010	IC,HM65256BFP-15T
	87-002-215-010	IC,L780S05
	87-002-216-010	IC,L780S06
	87-002-209-010	IC,LB8620M
	87-020-893-010	IC,M74HC00P
	87-001-802-010	IC,NJM2902M
	87-027-842-010	IC,NJM2904M
	87-020-903-010	IC,NJM7805FA
	87-020-910-010	IC,PST-523F
	87-002-213-010	IC,SAA7322
	87-002-343-010	IC,SBX1619-52(REMOTE SENSOR)
	87-001-799-010	IC,SN74LS624NS
	87-002-210-010	IC,TA8409F
	87-002-223-010	IC,TC4051BF
	87-002-375-010	IC,TC4S584F
	87-001-796-010	IC,TC74HC163AF
	87-001-668-010	IC,TC74HC4053AF
	87-001-584-010	IC,TC7S02F
	87-001-881-010	IC,TC7SU04F
	80-MQ1-625-010	IC,UPD75112GF-638
=== TRANSISTOR ===		
	87-026-500-010	TRANSISTOR,2SD2144S,UV
	87-026-518-010	FET,2SJ207
	89-211-821-010	TRANSISTOR,2SB1182Q
	89-213-293-010	TRANSISTOR,2SB1329R
	89-213-321-010	TRANSISTOR,2SB1332R
	89-318-154-010	TRANSISTOR,2SC1815Y
	89-341-164-010	TRANSISTOR,2SC4116Y
	89-342-132-010	TRANSISTOR,2SC4213B
	89-515-850-010	FET,2SK1585
	87-026-219-010	TRANSISTOR,DTA144ES
	87-026-218-010	TRANSISTOR,DTC144ES
	87-026-366-010	TRANSISTOR,RN1204
	87-026-377-010	TRANSISTOR,RN2204
=== DIODE ===		
	87-027-376-010	DIODE,1B4B41
	87-001-574-010	DIODE,1SR139-200
	87-020-110-010	DIODE,1SS177
	87-001-166-010	DIODE,CHIP 1SS301
	87-001-749-010	DIODE,D5SB20
	87-027-661-010	DIODE,ZENER HZ30-2L
	87-027-393-010	DIODE,ZENER HZ4C2
	87-027-320-010	DIODE,ZENER HZ7C2
=== MAIN CIRCUIT BOARD SECTION ===		
C50	$87-012-286-010	CAP,CHIP SS 0.01-25
C51	$87-012-286-010	CAP,CHIP SS 0.01-25
C52	$87-012-286-010	CAP,CHIP SS 0.01-25
C53	$87-012-286-010	CAP,CHIP SS 0.01-25
C54	$87-012-286-010	CAP,CHIP SS 0.01-25
C55	$87-012-286-010	CAP,CHIP SS 0.01-25
C56	$87-012-286-010	CAP,CHIP SS 0.01-25
C57	$87-012-180-010	CAP,CHIP SS 22P-50 CH
C58	$87-012-286-010	CAP,CHIP SS 0.01-25
C59	$87-010-194-010	CAP,CHIP S 0.047-25
C60	$87-012-360-010	CAP,CHIP S 1-10 FZ
C61	$87-012-286-010	CAP,CHIP SS 0.01-25
C62	$87-012-286-010	CAP,CHIP SS 0.01-25
C63	$87-012-286-010	CAP,CHIP SS 0.01-25
C64	$87-010-880-010	CAP,CHIP ELECT 47-6.3
C65	$87-010-196-010	CAP,CHIP S 0.1-25
C66	$87-010-196-010	CAP,CHIP S 0.1-25
C67	$87-010-880-010	CAP,CHIP ELECT 47-6.3
C100	$87-012-182-010	CAP,CHIP SS 27P-50 CH
C101	$87-012-182-010	CAP,CHIP SS 27P-50 CH
C102	$87-010-885-010	CAP,CHIP ELECT 22-10
C103	$87-010-884-010	CAP,CHIP ELECT 22-6.3
C104	$87-010-196-010	CAP,CHIP S 0.1-25
C105	$87-012-286-010	CAP,CHIP SS 0.01-25
C106	$87-012-286-010	CAP,CHIP SS 0.01-25
C200	$87-012-188-010	CAP,CHIP SS 47P-50 CH
C201	$87-012-188-010	CAP,CHIP SS 47P-50 CH
C202	$87-010-779-080	C-CAP,E 100-6.3
C203	$87-010-196-010	CAP,CHIP S 0.1-25
C204	$87-010-196-010	CAP,CHIP S 0.1-25
C205	$87-010-779-080	C-CAP,E 100-6.3
C206	$87-012-180-010	CAP,CHIP SS 22P-50 CH
C207	$87-010-178-010	CAP,CHIP S 1000P-50
C208	$87-012-172-010	CAP,CHIP SS 10P-50 CH
C209	$87-012-272-010	CAP,CHIP SS 680P-50
C210	$87-012-188-010	CAP,CHIP SS 47P-50 CH
C211	$87-012-272-010	CAP,CHIP SS 680P-50
C212	$87-012-188-010	CAP,CHIP SS 47P-50 CH
C213	$87-012-286-010	CAP,CHIP SS 0.01-25
C214	$87-010-196-010	CAP,CHIP S 0.1-25
C215	$87-010-196-010	CAP,CHIP S 0.1-25
C216	$87-012-286-010	CAP,CHIP SS 0.01-25
C217	$87-012-286-010	CAP,CHIP SS 0.01-25
C218	$87-012-274-010	CAP,CHIP SS 1000P-50
C219	$87-010-505-010	CAP,CHIP TANTALUM 1-16
C220	$87-012-285-010	CAP,CHIP SS 8200P-50
C221	$87-010-196-010	CAP,CHIP S 0.1-25
C222	$87-010-884-010	CAP,CHIP ELECT 22-6.3
C223	$87-012-176-010	CAP,CHIP SS 15P-50 CH
C224	$87-012-174-010	CAP,CHIP SS 12P-50 CH
C225	$87-012-174-010	CAP,CHIP SS 12P-50 CH
C226	$87-012-174-010	CAP,CHIP SS 12P-50 CH
C227	$87-012-174-010	CAP,CHIP SS 12P-50 CH
C228	$87-012-188-010	CAP,CHIP SS 47P-50 CH
C300	$87-010-196-010	CAP,CHIP S 0.1-25
C301	$87-010-884-010	CAP,CHIP ELECT 22-6.3
C302	$87-012-286-010	CAP,CHIP SS 0.01-25
C303	$87-010-196-010	CAP,CHIP S 0.1-25
C304	$87-010-596-010	CAP,CHIP S 0.047-16
C305	$87-012-282-010	CAP,CHIP SS 4700P-50
C306	$87-012-286-010	CAP,CHIP SS 0.01-25
C307	$87-010-781-010	CAP,CHIP ELECT 3.3-6.3
C308	$87-012-360-010	CAP,CHIP S 1-10 FZ
C309	$87-010-775-010	CAP,CHIP MYLAR 0.068-25J
C310	$87-010-772-010	CAP,CHIP MYLAR 2200P-25J
C311	$87-010-424-010	CAP,CHIP TANTALUM 4.7-4
C312	$87-010-774-010	CAP,CHIP MYLAR 0.047-25J
C313	$87-010-772-010	CAP,CHIP MYLAR 2200P-25J

REF.NO.	PART NO.	DESCRIPTION
C314	$87-012-274-010	CAP,CHIP SS 1000P-50
C315	$87-010-424-010	CAP,CHIP TANTALUM 4.7-4
C316	$87-010-505-010	CAP,CHIP TANTALUM 1-16
C317	$87-012-188-010	CAP,CHIP SS 47P-50 CH
C318	$87-012-286-010	CAP,CHIP SS 0.01-25
C319	$87-010-196-010	CAP,CHIP S 0.1-25
C320	$87-012-188-010	CAP,CHIP SS 47P-50 CH
C321	$87-012-360-010	CAP,CHIP S 1-10 FZ
C322	$87-012-286-010	CAP,CHIP SS 0.01-25
C323	$87-012-281-010	CAP,CHIP SS 3900P-50
C324	$87-012-285-010	CAP,CHIP SS 8200P-50
C325	$87-012-281-010	CAP,CHIP SS 3900P-50
C326	$87-012-274-010	CAP,CHIP SS 1000P-50
C327	$87-010-424-010	CAP,CHIP TANTALUM 4.7-4
C328	$87-012-278-010	CAP,CHIP SS 2200P-50
C329	$87-012-196-010	CAP,CHIP SS 120P-50 CH
C330	$87-012-360-010	CAP,CHIP S 1-10 FZ
C331	$87-010-196-010	CAP,CHIP S 0.1-25
C332	$87-012-286-010	CAP,CHIP SS 0.01-25
C333	$87-012-360-010	CAP,CHIP S 1-10 FZ
C334	$87-010-776-010	CAP,CHIP MYLAR 0.15-25J
C335	$87-010-196-010	CAP,CHIP S 0.1-25
C336	$87-010-885-010	CAP,CHIP ELECT 22-10
C337	$87-012-274-010	CAP,CHIP SS 1000P-50
C338	$87-012-360-010	CAP,CHIP S 1-10 FZ
C339	$87-010-196-010	CAP,CHIP S 0.1-25
C340	$87-012-195-010	CAP,CHIP SS 100P-50 CH
C341	$87-012-360-010	CAP,CHIP S 1-10 FZ
C342	$87-012-360-010	CAP,CHIP S 1-10 FZ
C343	$87-010-196-010	CAP,CHIP S 0.1-25
C344	$87-010-885-010	CAP,CHIP ELECT 22-10
C345	$87-010-885-010	CAP,CHIP ELECT 22-10
C346	$87-010-196-010	CAP,CHIP S 0.1-25
C347	$87-010-884-010	CAP,CHIP ELECT 22-6.3
C348	$87-010-196-010	CAP,CHIP S 0.1-25
C349	$87-012-360-010	CAP,CHIP S 1-10 FZ
C350	$87-010-789-010	CAP,CHIP MYLAR 0.022J
C351	$87-010-196-010	CAP,CHIP S 0.1-25
C352	$87-012-286-010	CAP,CHIP SS 0.01-25
C353	$87-010-193-010	CAP,CHIP SS 0.033-25
EM1	87-006-164-080	C-F-BEAD,2125CB50(Z ONLY)
EM2	87-006-164-080	C-F-BEAD,2125CB50(Z ONLY)
EM3	87-006-164-080	C-F-BEAD,2125CB50(Z ONLY)
EM4	87-006-164-080	C-F-BEAD,2125CB50(Z ONLY)
EM5	87-006-164-080	C-F-BEAD,2125CB50(Z ONLY)
EM6	87-006-164-080	C-F-BEAD,2125CB50(Z ONLY)
EM7	87-006-164-080	C-F-BEAD,2125CB50(Z ONLY)
EM8	87-006-164-080	C-F-BEAD,2125CB50(Z ONLY)
EM9	87-006-164-080	C-F-BEAD,2125CB50(Z ONLY)
EM10	87-006-164-080	C-F-BEAD,2125CB50(Z ONLY)
EM11	87-006-164-080	C-F-BEAD,2125CB50(Z ONLY)
EM12	87-006-164-080	C-F-BEAD,2125CB50(Z ONLY)
EM13	87-006-164-080	C-F-BEAD,2125CB50(Z ONLY)
EM14	87-006-164-080	C-F-BEAD,2125CB50(Z ONLY)
L1	$89-HD1-608-010	FILTER,A365LNG-1391
L2	$89-HD1-609-010	FILTER,H366BNJ-1232YPD
L3	$87-005-286-010	COIL,CHIP 1UH
L4	$87-005-310-010	COIL,CHIP 100UH
L5	$89-HD1-607-010	COIL,303AN-1531AQVC0
L6	$87-005-298-010	COIL,CHIP 10UH
L9	$87-005-310-010	COIL,CHIP 100UH
L10	$87-003-241-010	COIL,CHIP S 4.7UH
L11	$87-003-241-010	COIL,CHIP S 4.7UH
R32	$87-022-204-010	RES,CHIP 22-1W
R33	$87-022-204-010	RES,CHIP 22-1W
SFR6	$87-024-332-010	SFR,10K
SFR7	$87-024-332-010	SFR,10K
SFR8	$87-024-334-010	SFR,3.3K
SFR9	$87-024-335-010	SFR,100K
SFR10	$87-024-365-010	SFR,330
X1	$87-030-191-010	VIB,CER 4.19MGCM
X2	$87-030-146-010	XTAL RESONATOR 22.5792MHZ
X3	$87-030-147-010	XTAL RESONATOR 24.576MHZ
X4	$87-030-190-010	XTAL RESONATOR 37.632MHZ

=== RF CIRCUIT BOARD SECTION ===

REF.NO.	PART NO.	DESCRIPTION
C1	$87-012-193-010	CAP,CHIP SS 82P-50 CH
C2	$87-012-193-010	CAP,CHIP SS 82P-50 CH
C3	$87-012-282-010	CAP,CHIP SS 4700P-50
C4	$87-012-282-010	CAP,CHIP SS 4700P-50
C5	$87-012-280-010	CAP,CHIP SS 3300P-50
C6	$87-012-280-010	CAP,CHIP SS 3300P-50
C7	$87-012-280-010	CAP,CHIP SS 3300P-50
C8	$87-012-280-010	CAP,CHIP SS 3300P-50
C9	$87-012-286-010	CAP,CHIP SS 0.01-25
C10	$87-012-286-010	CAP,CHIP SS 0.01-25
C11	$87-010-787-010	CAP,CHIP SS 0.022-25
C12	$87-010-787-010	CAP,CHIP SS 0.022-25
C13	$87-010-196-010	CAP,CHIP S 0.1-25
C14	$87-010-196-010	CAP,CHIP S 0.1-25
C15	$87-012-286-010	CAP,CHIP SS 0.01-25
C16	$87-012-195-010	CAP,CHIP SS 100P-50 CH
C17	$87-012-286-010	CAP,CHIP SS 0.01-25
C18	$87-012-286-010	CAP,CHIP SS 0.01-25
C19	$87-012-199-010	CAP,CHIP SS 220P-50 CH
C20	$87-012-188-010	CAP,CHIP SS 47P-50 CH
C21	$87-012-275-010	CAP,CHIP SS 1200P-50
C22	$87-012-286-010	CAP,CHIP SS 0.01-25
C23	$87-012-286-010	CAP,CHIP SS 0.01-25
C24	$87-012-286-010	CAP,CHIP SS 0.01-25
C25	$87-012-286-010	CAP,CHIP SS 0.01-25
C26	$87-012-286-010	CAP,CHIP SS 0.01-25
C27	$87-012-286-010	CAP,CHIP SS 0.01-25
C28	$87-010-771-010	CAP,CHIP TANTALUM 47-6.3
C29	$87-010-196-010	CAP,CHIP S 0.1-25
C30	$87-010-515-010	CAP,CHIP TANTALUM 22-6.3
C31	$87-010-196-010	CAP,CHIP S 0.1-25
C32	$87-010-771-010	CAP,CHIP TANTALUM 47-6.3
C33	$87-010-196-010	CAP,CHIP S 0.1-25
C34	$87-010-196-010	CAP,CHIP S 0.1-25
C35	$87-010-522-010	CAP,CHIP TANTALUM 2.2-10
C36	$87-010-522-010	CAP,CHIP TANTALUM 2.2-10
C37	$87-010-196-010	CAP,CHIP S 0.1-25
C38	$87-010-771-010	CAP,CHIP TANTALUM 47-6.3
L7	$87-005-310-010	COIL,CHIP 100UH
L8	$87-005-310-010	COIL,CHIP 100UH
SFR1	$87-024-334-010	SFR,3.3K
SFR2	$87-024-334-010	SFR,3.3K
SFR3	$87-024-407-010	SFR,10K
SFR4	$87-024-407-010	SFR,10K
SFR5	$87-024-333-010	SFR,1K

=== FRONT CIRCUIT BOARD SECTION ===

REF.NO.	PART NO.	DESCRIPTION
C201	$87-010-421-010	CAP,ELECT 4.7-50 SL
C202	$87-018-209-010	CAP,CERA-SOL SS 0.1-50
FL201	80-MQ1-609-010	FL,BG-868GK(DISPLAY)
R227	$87-022-207-010	RES,ARRY AFRMXS4-472J
R228	$87-022-051-010	RES,ARRY AFRMXS8-223J
R229	$87-022-051-010	RES,ARRY AFRMXS8-223J
SW201	87-036-087-010	SLIDE SW(TIMER)
SW202	87-036-142-010	TACT SW(PLAY)
SW203	87-036-142-010	TACT SW(PAUSE)
SW204	87-036-142-010	TACT SW(REC MUTE)
SW205	87-036-142-010	TACT SW(F.SKIP/FF)
SW206	87-036-142-010	TACT SW(OPEN/CLOSE)
SW207	87-036-142-010	TACT SW(REC)
SW208	87-036-142-010	TACT SW(MARK-END-SEARCH)
SW209	87-036-142-010	TACT SW(REW/B SKIP)
SW210	87-036-142-010	TACT SW(CD SYNC REC)
SW211	87-036-142-010	TACT SW(STOP/CLEAR)
SW212	87-036-142-010	TACT SW(ID ERASE)
SW213	87-036-142-010	TACT SW(MARK)
SW214	87-036-142-010	TACT SW(AUTO/MANU)
SW215	87-036-142-010	TACT SW(COUNTER/RESET)
SW216	87-036-142-010	TACT SW(DISPLAY)
SW219	87-036-142-010	TACT SW(INPUT SELECT)
SW220	87-036-142-010	TACT SW(RENUMBER)
SW221	87-036-142-010	TACT SW(POWER)
VR301	$87-024-336-010	VOLUME,20KX2(REC LEVEL)
X101	$87-008-394-010	CF CST 4.19MGW

=== POWER CIRCUIT BOARD SECTION ===

REF.NO.	PART NO.	DESCRIPTION
C101	$87-010-101-010	CAP,ELECT 220-16 SME
C102	$87-018-134-010	CAP,CERA-SOL SS 0.01-16
C103	$87-010-878-010	CAP,ELECT 6800-16
C104	$87-018-134-010	CAP,CERA-SOL SS 0.01-16
C105	$87-018-134-010	CAP,CERA-SOL SS 0.01-16
C106	$87-010-248-010	CAP,ELECT 220-10 SME
C107	$87-010-248-010	CAP,ELECT 220-10 SME
C108	$87-018-134-010	CAP,CERA-SOL SS 0.01-16
C109	$87-018-134-010	CAP,CERA-SOL SS 0.01-16
C110	$87-010-248-010	CAP,ELECT 220-10 SME
C112	$87-010-248-010	CAP,ELECT 220-10 SME
C113	$87-010-410-010	CAP,ELECT 330-50 SME
C114	$87-018-134-010	CAP,CERA-SOL SS 0.01-16
C115	$87-010-237-010	CAP,ELECT 1000-16 SME
C116	$87-010-237-010	CAP,ELECT 1000-16 SME
C117	$87-018-134-010	CAP,CERA-SOL SS 0.01-16
C118	$87-018-209-010	CAP,CERA-SOL SS 0.1-50
C121	$87-010-248-010	CAP,ELECT 220-10 SME
C150	$87-018-134-010	CAP,CERA-SOL SS 0.01-16
C151	$87-010-265-010	CAP,ELECT 33-16 SME
C153	$87-018-119-010	CAP,CERA-SOL SS 100P-50
C155	$87-018-209-010	CAP,CERA-SOL SS 0.1-50
C156	$87-018-115-010	CAP,CERA-SOL SS 47P-50 SL
C157	$87-018-115-010	CAP,CERA-SOL SS 47P-50 SL
C159	$87-018-134-010	CAP,CERA-SOL SS 0.01-16
C160	$87-010-265-010	CAP,ELECT 33-16 SME
EM101	$87-008-372-010	FILTER,EMI BL OIRNI
EM103	87-008-372-080	FILTER,EMI BL OIRNI(Z ONLY)
J150	$87-009-049-010	JACK,PIN IP(COAXIAL)
J151	87-009-413-010	CONNECTOR,4P FG(DAT CONTROL)
J152	87-002-211-010	IC,GPIF32T(OPTICAL)
J153	87-002-212-010	IC,GPIF32R(OPTICAL)
L101	87-003-102-010	COIL,10UH
L151	87-003-102-080	COIL,10UH
,R111	87-029-131-010	RES,FUSE 1-1W
,R112	87-029-132-090	RES,FUSE 4.7-1/4W

=== A/D CONVERTER CIRCUIT BOARD SECTION ===

REF.NO.	PART NO.	DESCRIPTION
C301	$87-010-265-010	CAP,ELECT 33-16 SME

www.manualscenter.com

REF.NO.	PART NO.	DESCRIPTION
C302	$87-018-209-010	CAP,CERA-SOL SS 0.1-50
C303	$87-010-265-010	CAP,ELECT 33-16 SME
C304	$87-018-115-010	CAP,CERA-SOL SS 47P-50 SL
C305	$87-010-265-010	CAP,ELECT 33-16 SME
C306	$87-018-134-010	CAP,CERA-SOL SS 0.01-16
C307	$87-010-265-010	CAP,ELECT 33-16 SME
C308	$87-018-134-010	CAP,CERA-SOL SS 0.01-16
C309	$87-018-209-010	CAP,CERA-SOL SS 0.1-50
C310	$87-010-265-010	CAP,ELECT 33-16 SME
C311	$87-018-209-010	CAP,CERA-SOL SS 0.1-50
C312	$87-018-134-010	CAP,CERA-SOL SS 0.01-16
C313	$87-018-134-010	CAP,CERA-SOL SS 0.01-16
C314	$87-010-405-010	CAP,ELECT 10-50 SME
C315	$87-018-209-010	CAP,CERA-SOL SS 0.1-50
C316	$87-018-134-010	CAP,CERA-SOL SS 0.01-16
C317	$87-018-134-010	CAP,CERA-SOL SS 0.01-16
C318	$87-015-457-010	CAP,ELECT 47-16 BP
C319	$87-015-457-010	CAP,ELECT 47-16 BP
C320	$87-014-045-010	CAP,PP 330P-100
C321	$87-014-045-010	CAP,PP 330P-100
C322	$87-010-265-010	CAP,ELECT 33-16 SME
C323	$87-010-265-010	CAP,ELECT 33-16 SME
C326	$87-010-265-010	CAP,ELECT 33-16 SME
C327	$87-010-265-010	CAP,ELECT 33-16 SME
C328	$87-018-117-010	CAP,CERA-SOL SS 68P-50 SL
C329	$87-018-117-010	CAP,CERA-SOL SS 68P-50 SL
C330	$87-010-615-010	CAP,ELECT 2.2-50 BP
C331	$87-010-615-010	CAP,ELECT 2.2-50 BP
C333	$87-018-115-010	CAP,CERA-SOL SS 47P-50 SL
C343	$87-018-209-010	CAP,CERA-SOL SS 0.1-50
C346	$87-010-112-010	CAP,ELECT 100-16
C347	$87-018-209-010	CAP,CERA-SOL SS 0.1-50(Z ONLY)
EM301	$87-008-372-010	FILTER,EMI BL OIRNI
EM302	87-008-372-080	FILTER,EMI BL OLRNI(Z ONLY)
EM303	87-003-219-010	FERRITE BEAD-BLOZRN2
EM304	87-003-219-010	FERRITE BEAD-BLOZRN2
J301	$87-009-414-010	JACK,PIN 2P(ANALOG LINE IN)
L301	$87-003-102-010	COIL,10UH
L302	$87-003-102-010	COIL,10UH

=== D/A CONVERTER CIRCUIT BOARD SECTION ===

REF.NO.	PART NO.	DESCRIPTION
C401	$87-018-134-010	CAP,CERA-SOL SS 0.01-16
C402	$87-010-265-010	CAP,ELECT 33-16 SME
C403	$87-010-265-010	CAP,ELECT 33-16 SME
C404	$87-018-209-010	CAP,CERA-SOL SS 0.1-50
C405	$87-018-209-010	CAP,CERA-SOL SS 0.1-50
C406	$87-010-265-010	CAP,ELECT 33-16 SME
C407	$87-010-265-010	CAP,ELECT 33-16 SME
C408	$87-018-209-010	CAP,CERA-SOL SS 0.1-50
C409	$87-010-265-010	CAP,ELECT 33-16 SME
C410	$87-018-209-010	CAP,CERA-SOL SS 0.1-50
C411	$87-010-265-010	CAP,ELECT 33-16 SME
C412	$87-018-209-010	CAP,CERA-SOL SS 0.1-50
C413	$87-014-035-010	CAP,PP 120P-100
C414	$87-014-053-010	CAP,PP 680P-100
C415	$87-010-265-010	CAP,ELECT 33-16 SME
C416	$87-018-209-010	CAP,CERA-SOL SS 0.1-50
C417	$87-014-051-010	CAP,PP 560P-100
C418	$87-014-061-010	CAP,PP 1500P-100
C419	$87-018-115-010	CAP,CERA-SOL SS 47P-50 SL
C420	$87-010-265-010	CAP,ELECT 33-16 SME
C421	$87-018-209-010	CAP,CERA-SOL SS 0.1-50
C423	$87-014-053-010	CAP,PP 680P-100
C424	$87-014-035-010	CAP,PP 120P-100
C425	$87-010-265-010	CAP,ELECT 33-16 SME
C426	$87-018-209-010	CAP,CERA-SOL SS 0.1-50
C427	$87-014-051-010	CAP,PP 560P-100
C428	$87-014-061-010	CAP,PP 1500P-100
C429	$87-018-115-010	CAP,CERA-SOL SS 47P-50 SL
C430	$87-010-265-010	CAP,ELECT 33-16 SME
C431	$87-010-265-010	CAP,ELECT 33-16 SME
C432	$87-015-457-010	CAP,ELECT 47-16 BP
C433	$87-015-457-010	CAP,ELECT 47-16 BP
C434	$87-015-457-010	CAP,ELECT 47-16 BP
C435	$87-015-457-010	CAP,ELECT 47-16 BP
C436	$87-018-131-010	CAP,CERA-SOL SS 1000P-50
C437	$87-018-131-010	CAP,CERA-SOL SS 1000P-50
C438	$87-018-134-010	CAP,CERA-SOL SS 0.01-16
C439	$87-018-134-010	CAP,CERA-SOL SS 0.01-16
C440	$87-018-134-010	CAP,CERA-SOL SS 0.01-16
C441	$87-018-134-010	CAP,CERA-SOL SS 0.01-16
C442	$87-018-134-010	CAP,CERA-SOL SS 0.01-16
C443	$87-018-134-010	CAP,CERA-SOL SS 0.01-16
C450	$87-018-134-010	CAP,CERA-SOL SS 0.01-16
C451	87-018-209-010	CAP,CERA-SOL SS 0.1-50
C452	87-010-265-010	CAP,ELECT 33-16 SME
C455	87-018-209-010	CAP,CERA-SOL SS *0.1-50(Z ONLY)
C470	$87-018-209-010	CAP,CERA-SOL SS 0.1-50
EM401	$87-008-372-010	FILTER,EMI BL OIRNI
EM402	87-003-219-010	FILTER,EMI BL OLRNI(Z ONLY)
EM403	87-003-219-010	FILTER,EMI BL OLRNI(Z ONLY)
J401	$87-009-414-010	JACK,PIN 2P(ANALOG LINE OUT)
L401	$87-003-143-010	COIL,4.7UH
L402	$87-003-102-010	COIL,10UH
L403	$87-003-102-010	COIL,10UH

=== REMOTE CIRCUIT BOARD SECTION ===

REF.NO.	PART NO.	DESCRIPTION
C205	$87-010-420-010	CAP,ELECT 10-16
REM201	87-002-343-010	IC,SBX1619-52 UNIT(REMOTE SENSOR)

=== REG. CIRCUIT BOARD SECTION ===

REF.NO.	PART NO.	DESCRIPTION
C120	$87-010-248-010	CAP,ELECT 220-10 SME
C122	$87-010-248-010	CAP,ELECT 220-10 SME
C123	$87-010-101-010	CAP,ELECT 220-16 SME

=== FILTER CIRCUIT BOARD SECTION ===

REF.NO.	PART NO.	DESCRIPTION
,L101	$87-005-367-010	FILTER,LINE

=== CONNECT-1 CIRCUIT BOARD SECTION ===

REF.NO.	PART NO.	DESCRIPTION
C344	$87-018-147-010	CAP,CERA-SOL SS 10P-50 CH
C361	87-018-209-080	CAP,TC-U 0.1-50F

=== CONNECT-2 CIRCUIT BOARD SECTION ===

=== TRAY MOTOR CIRCUIT BOARD SECTION ===

REF.NO.	PART NO.	DESCRIPTION
M3	80-203-603-010	TRAY MOTOR

=== MECHA CIRCUIT BOARD SECTION ===

REF.NO.	PART NO.	DESCRIPTION
PCB-P	$80-MQ1-620-010	MECHA FLEXIBLE CIRCUIT BOARD
S1	86-544-609-010	PUSH SW B(X SOFT,REC ENABLE)
S2	86-544-608-010	PUSH SW A(ASSETTE IN,1.5TP)

=== END SENSOR CIRCUIT BOARD SECTION ===

REF.NO.	PART NO.	DESCRIPTION
CP2	80-MQ1-644-010	P SENSOR,ON2175(END SENSOR)

=== T SENSOR CIRCUIT BOARD SECTION ===

REF.NO.	PART NO.	DESCRIPTION
CP3	86-544-610-010	P SENSOR(T SENSOR)

=== S SENSOR CIRCUIT BOARD SECTION ===

REF.NO.	PART NO.	DESCRIPTION
CP4	86-544-610-010	P SENSOR(S SENSOR)

=== TOP SENSOR CIRCUIT BOARD SECTION ===

REF.NO.	PART NO.	DESCRIPTION
CP1	80-MQ1-644-010	P SENSOR,ON2175(TOP SENSOR)

===MISCELLANEOUS===

REF.NO.	PART NO.	DESCRIPTION
,	$87-034-761-010	AC CORD,H 2M OFC BLK
,	$87-085-184-010	BUSHING,AC CORD D
,J101	$87-049-017-010	AC OUTLET(AC OUTLET)
M1	86-544-454-010	REEL MOTOR ASSY
M2	86-544-602-110	SLED MOTOR
M4	86-544-617-010	DRAM MOTOR(DOU-02G)
M5	98-835-206-010	CAPSTAN MOTOR
S3	87-036-089-010	LEAF SW(TRAY SW)
S4	86-544-604-010	MODE SELECTOR(MODE SW)
,S101	87-031-586-010	ROTARY SW(AC VOLTAGE)
SOL1	86-544-618-010	SOLENOIDE(BRAKE)
,T101	80-MQ1-602-010	POWER TRANSFORMER H

www.manualscenter.com

SCHEMATIC DIAGRAM – 1

www.manualscenter.com

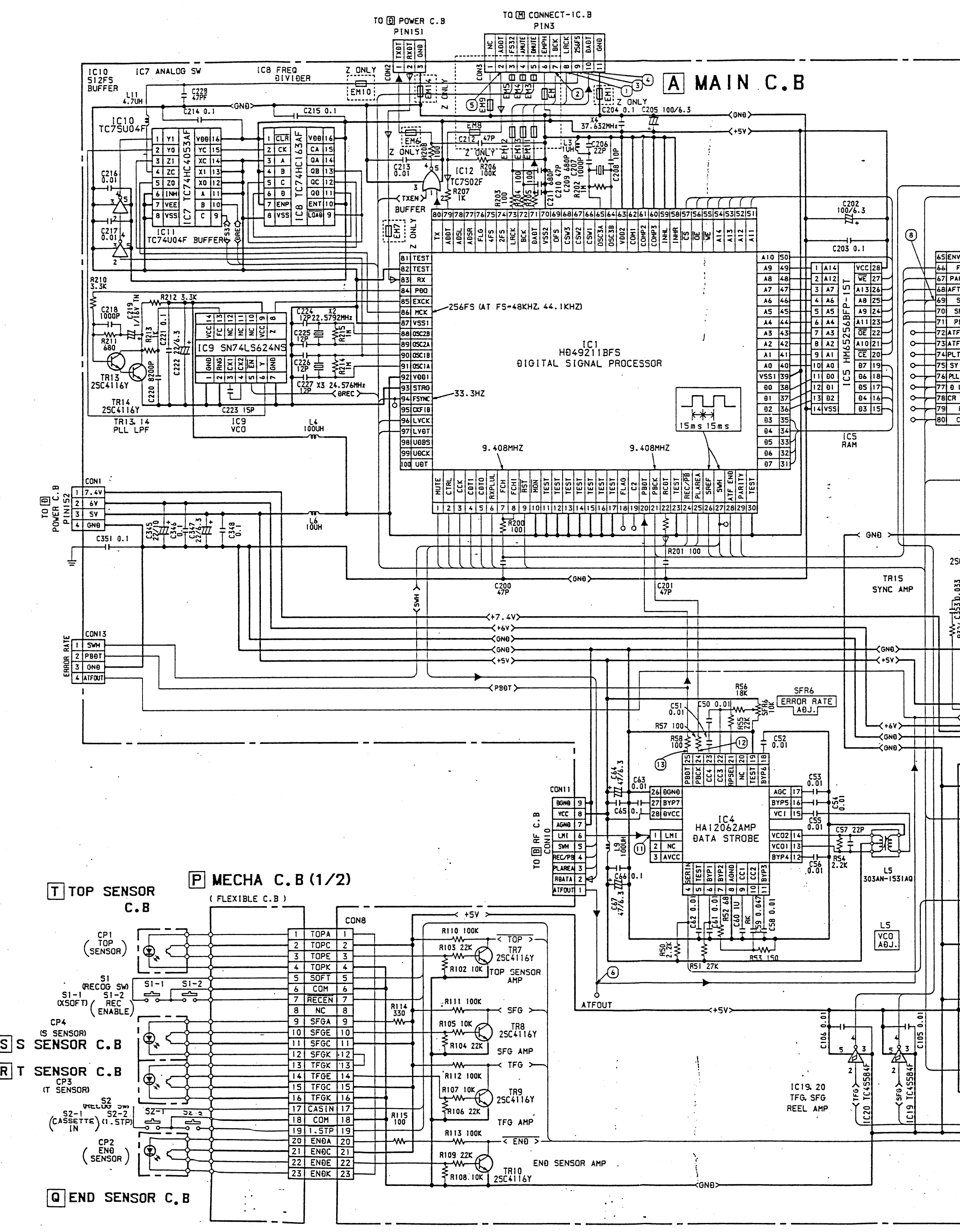

www.manualscenter.com

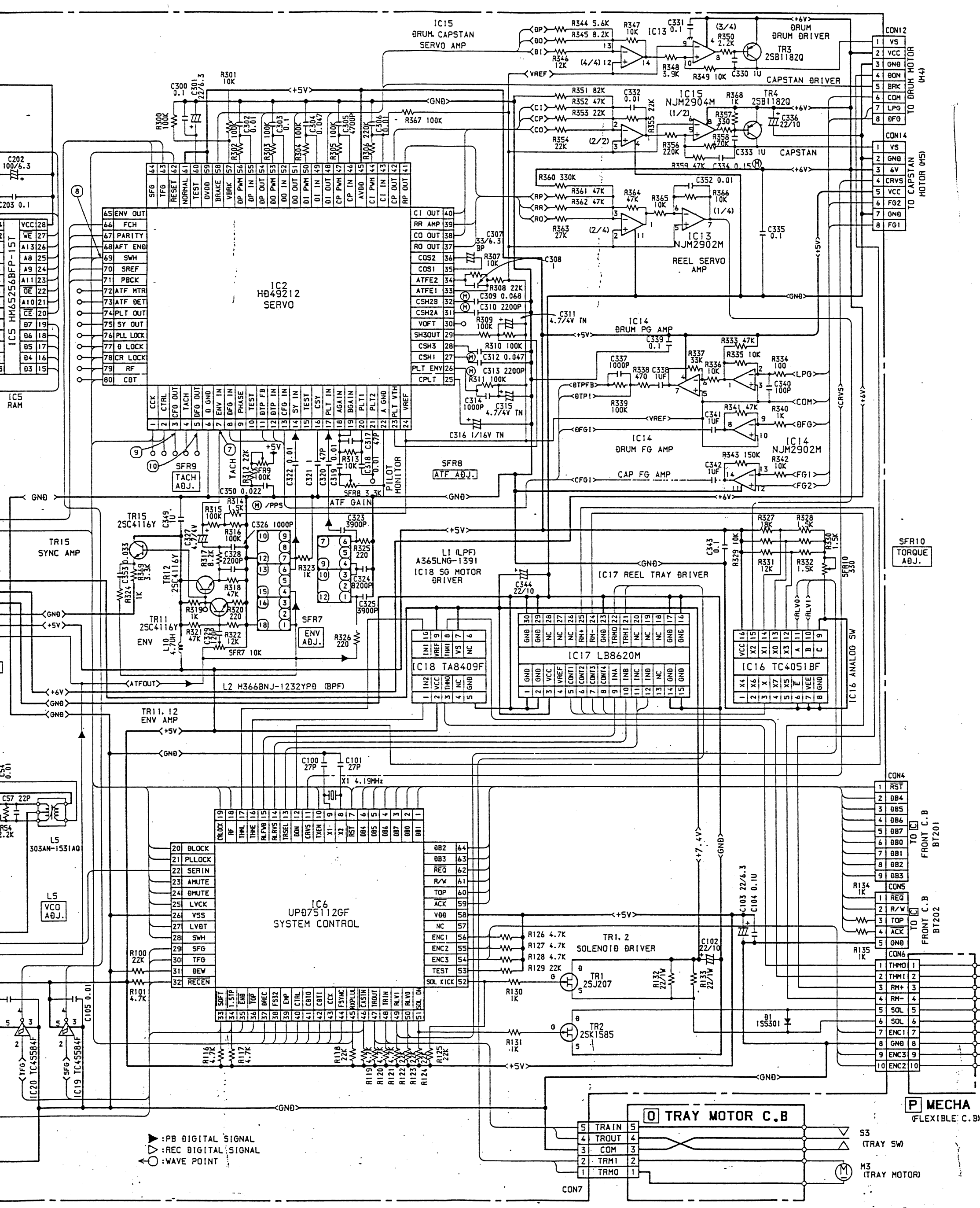

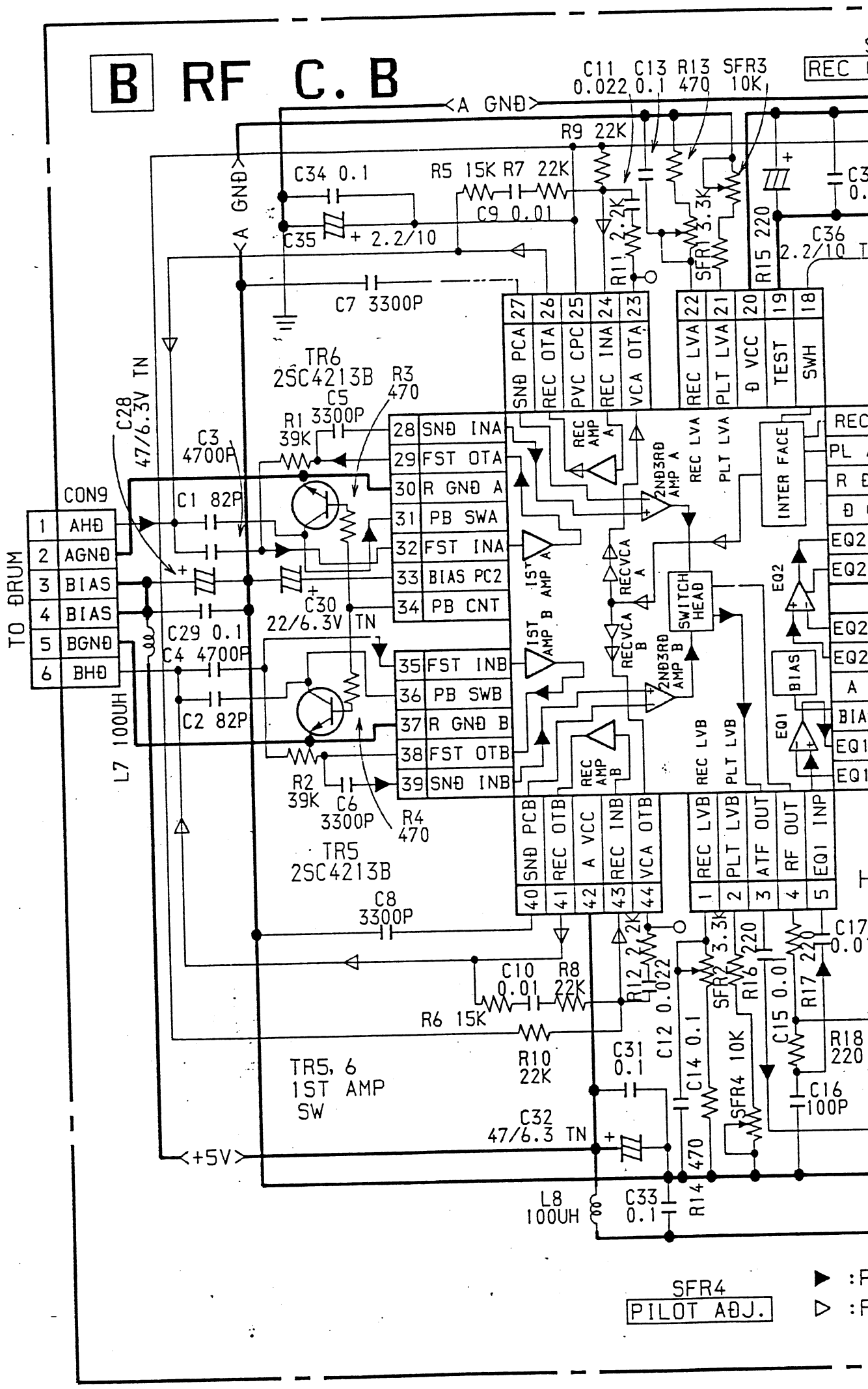

www.manualscenter.com

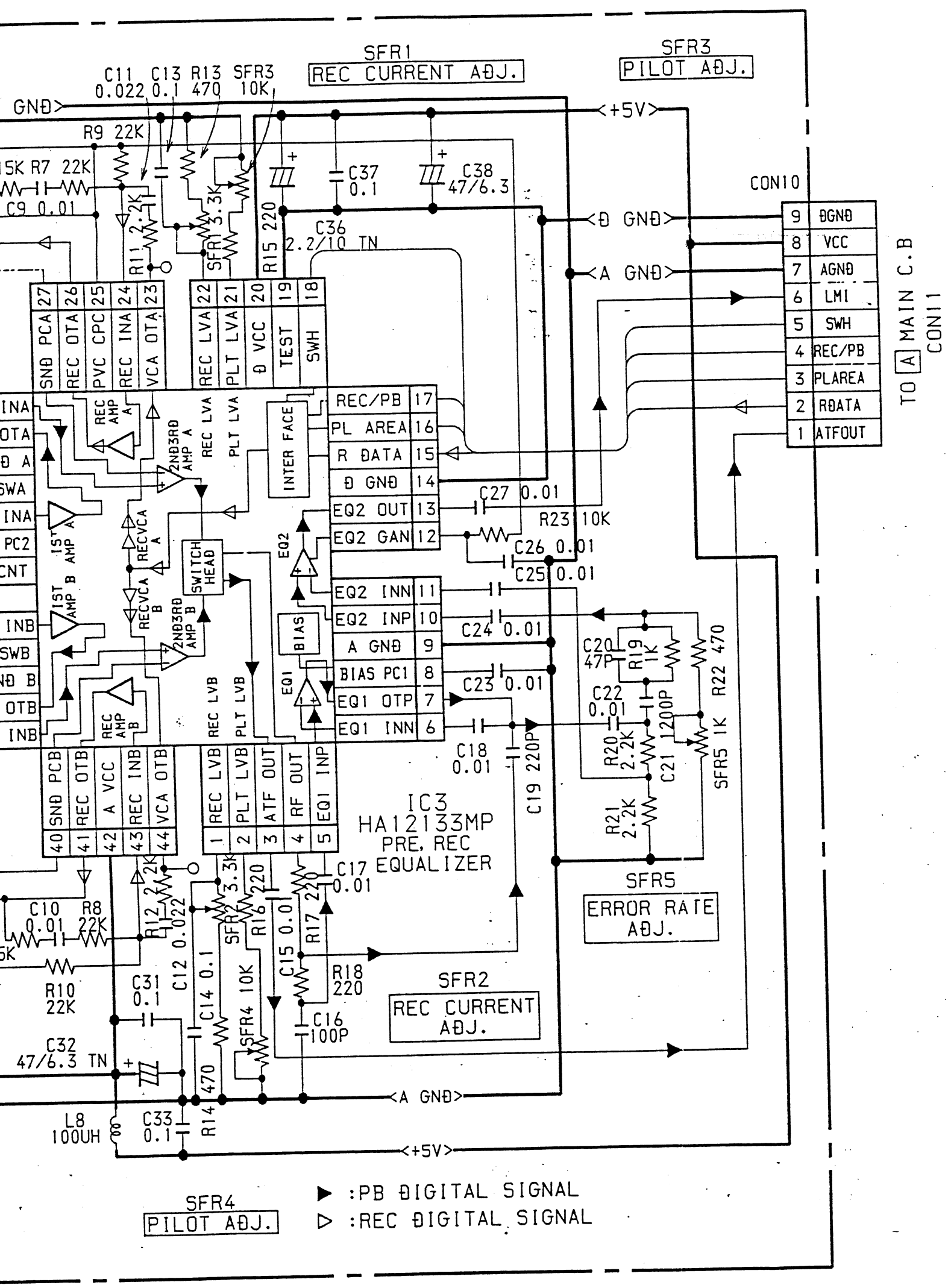

www.manualscenter.com

www.manualscenter.com

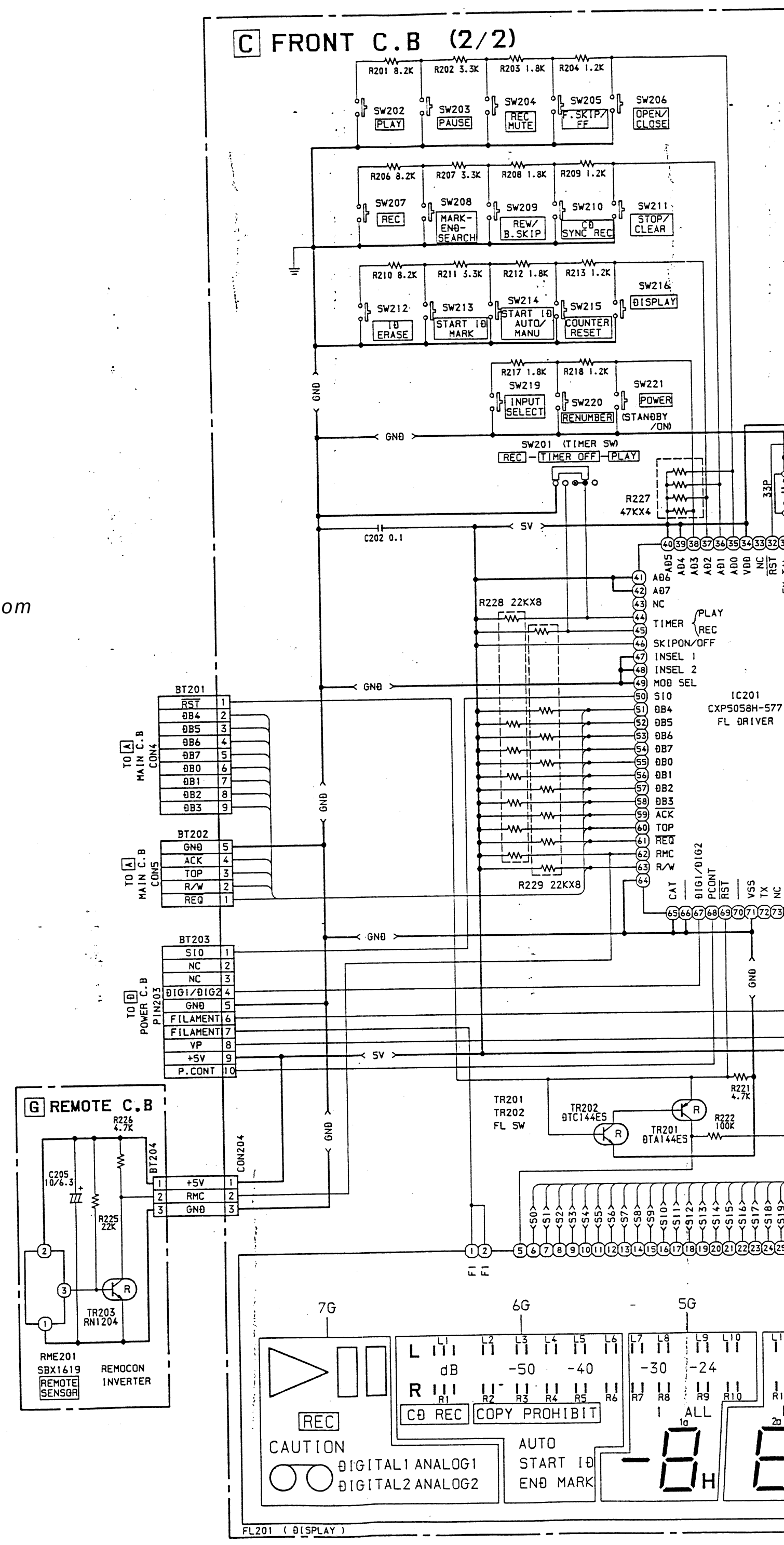

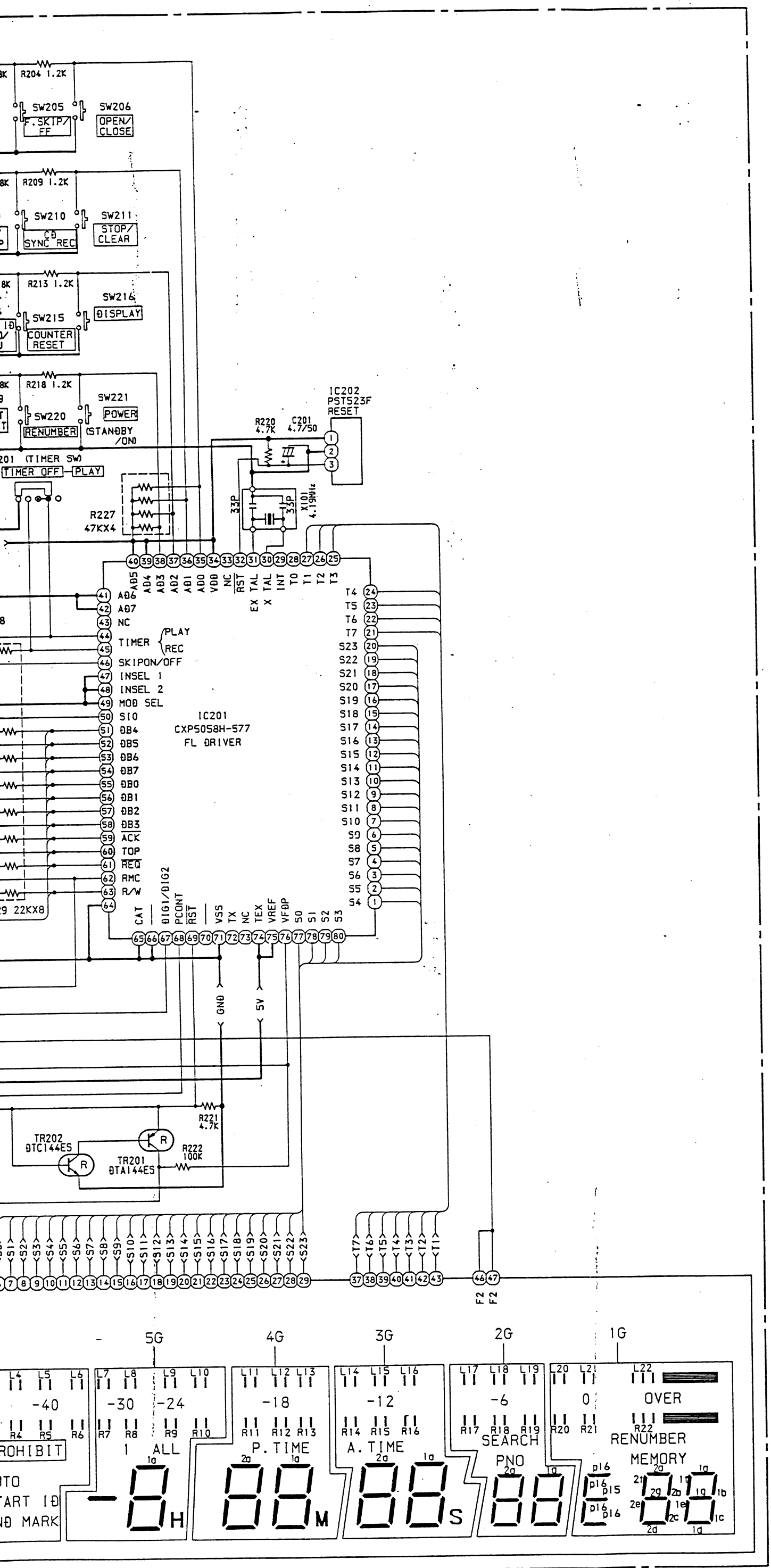

www.manualscenter.com

SCHEMATIC DIAGRAM – 4

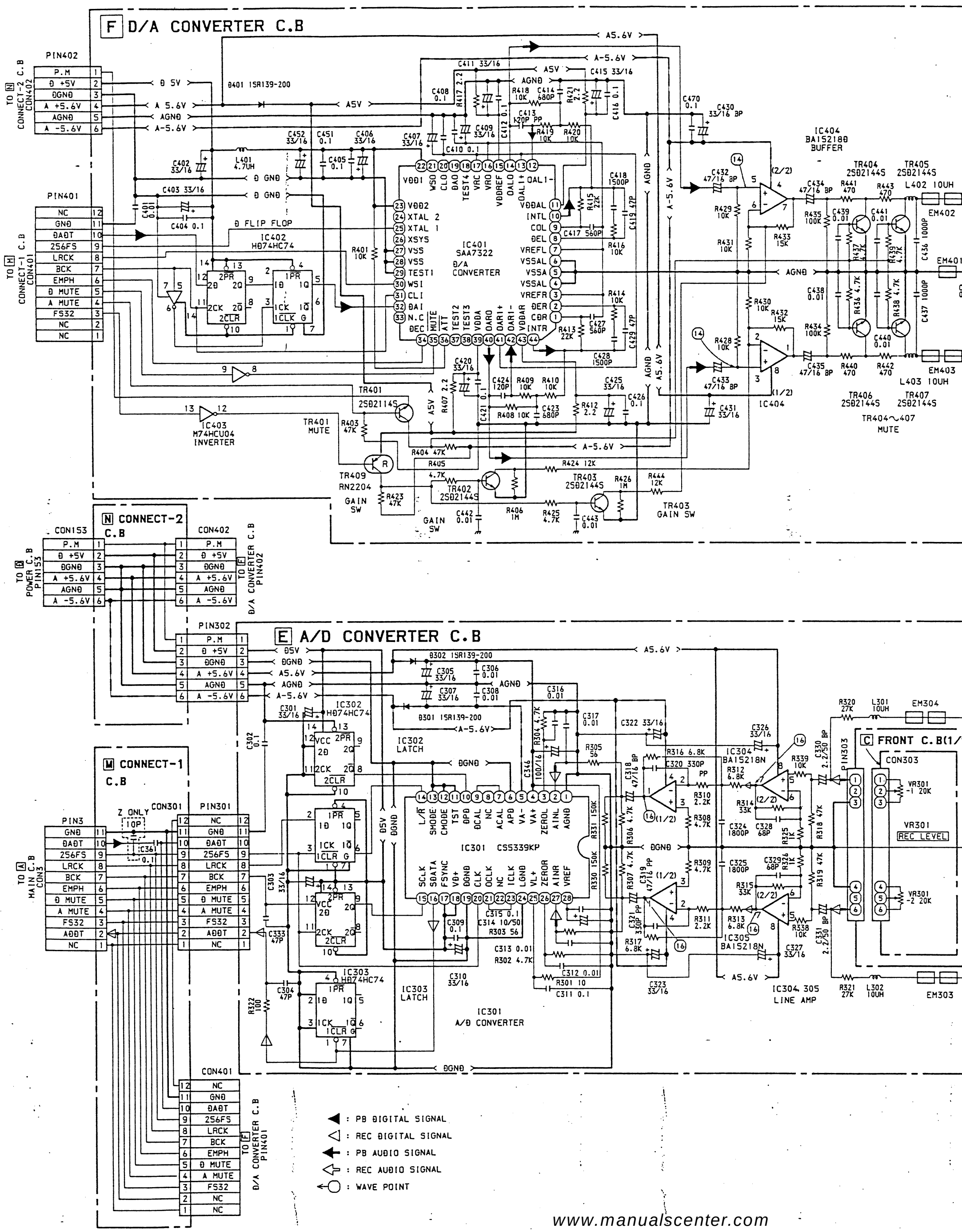

www.manualscenter.com

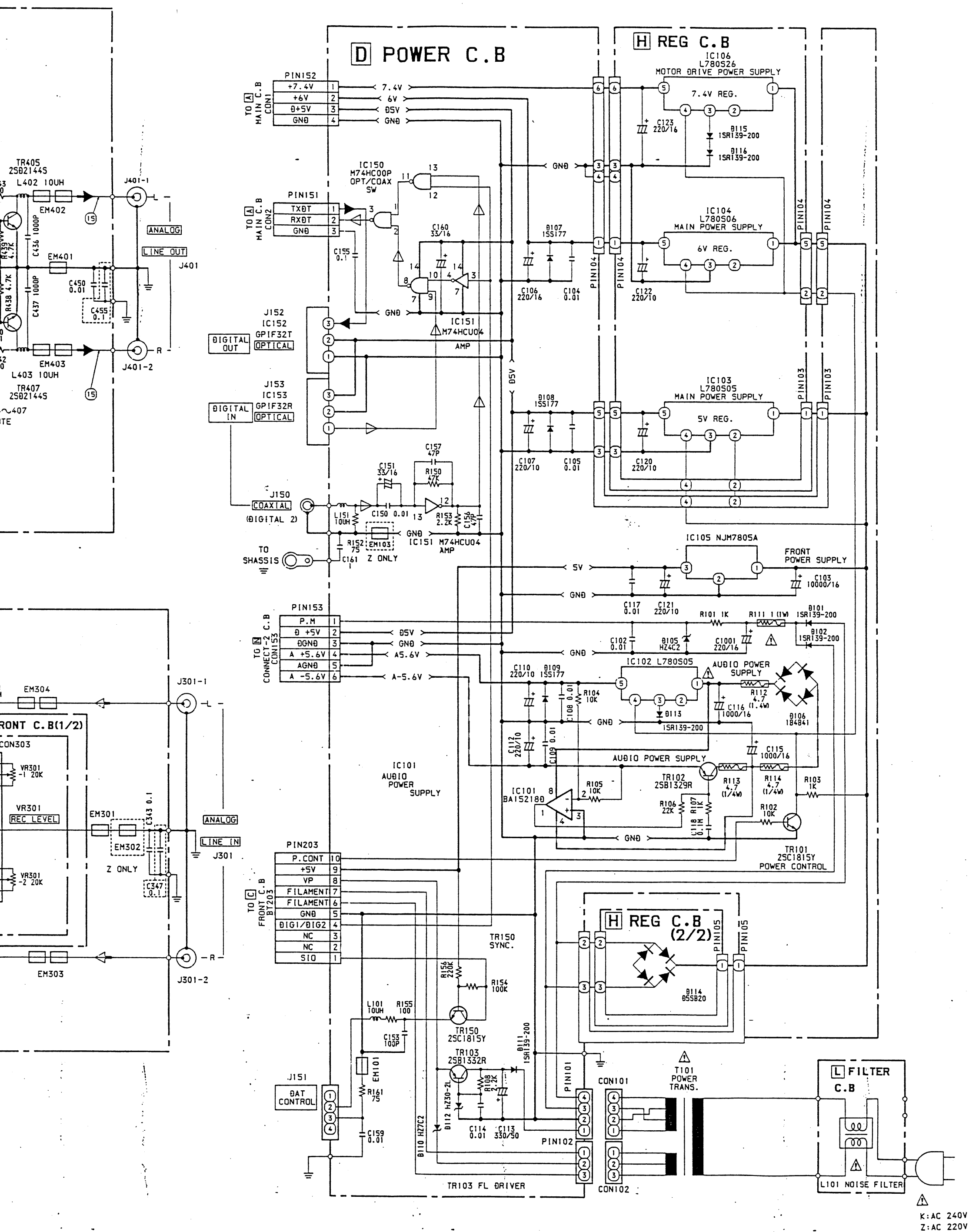

www.manualscenter.com

To A MAIN C.B CON11

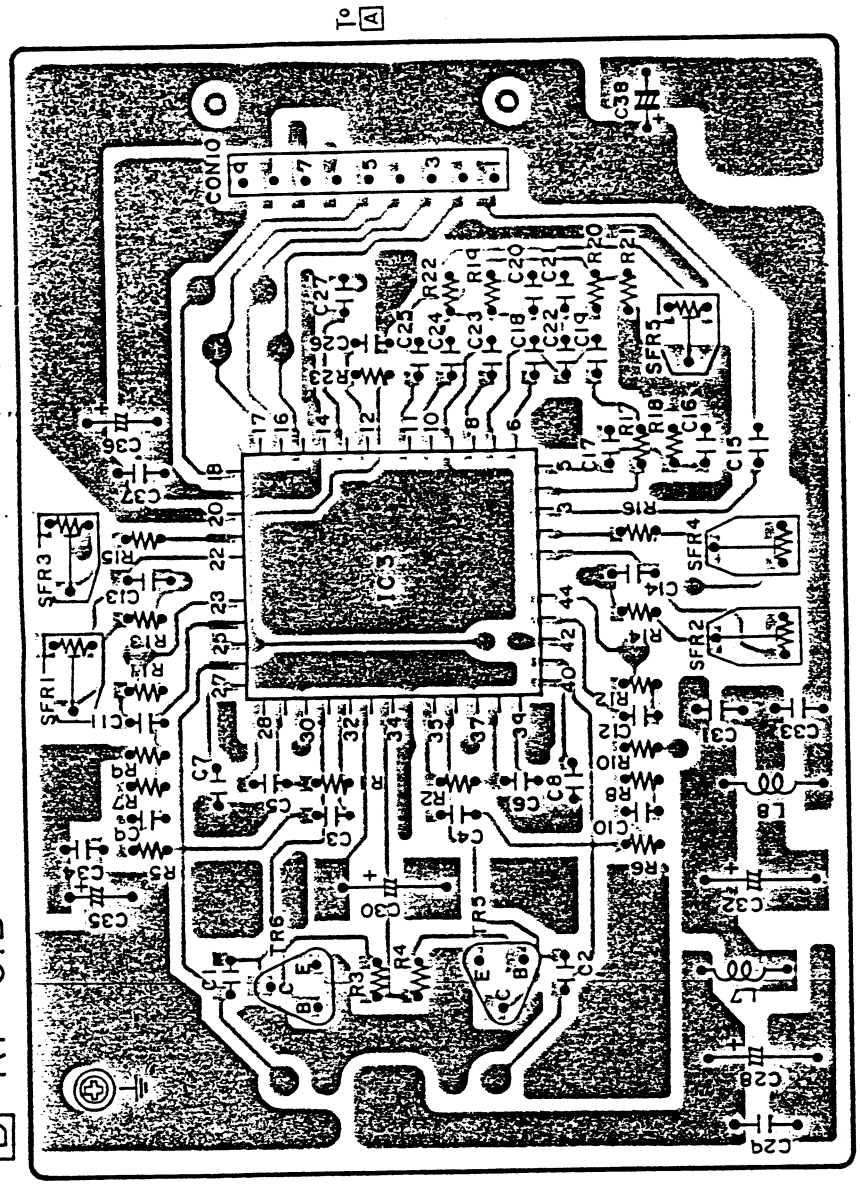

B RF C.B

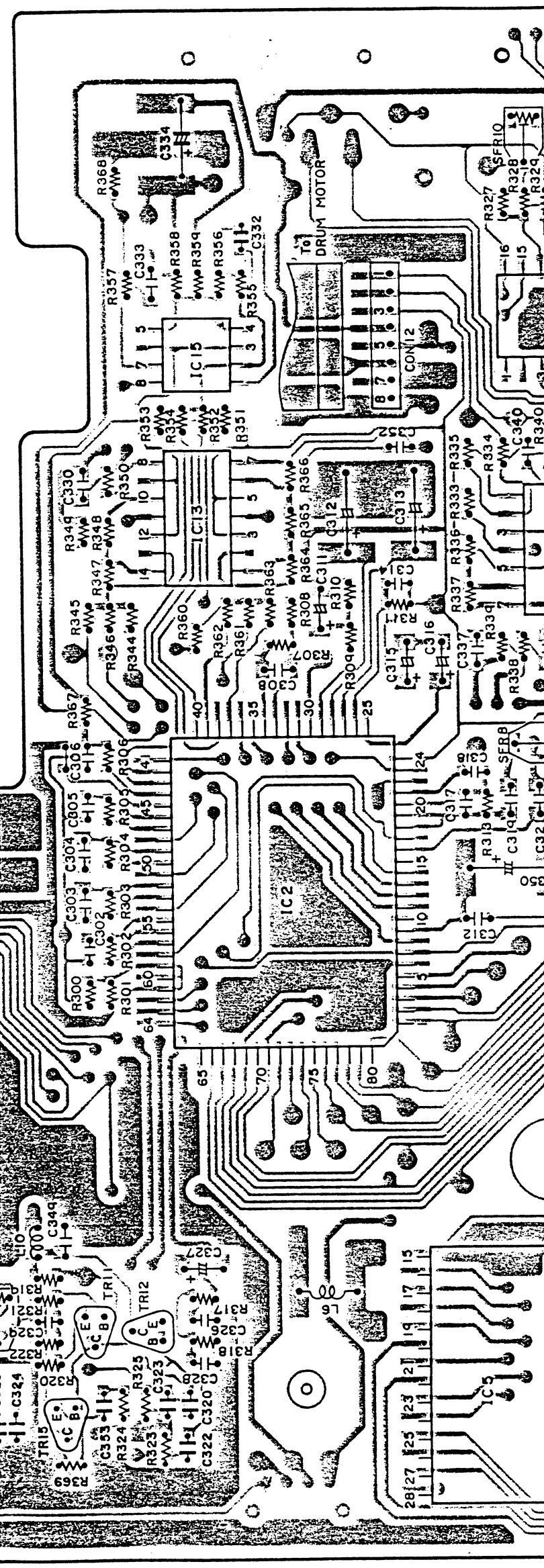

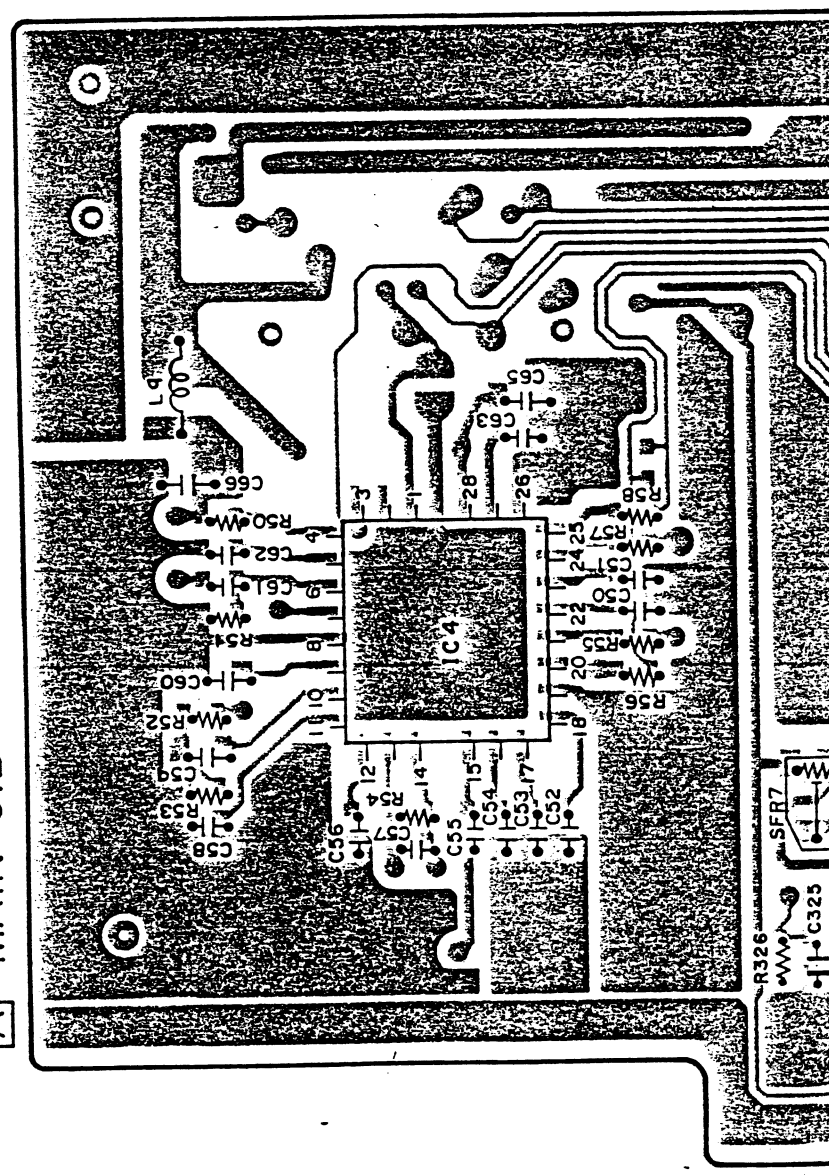

A MAIN C.B

www.manualscenter.com

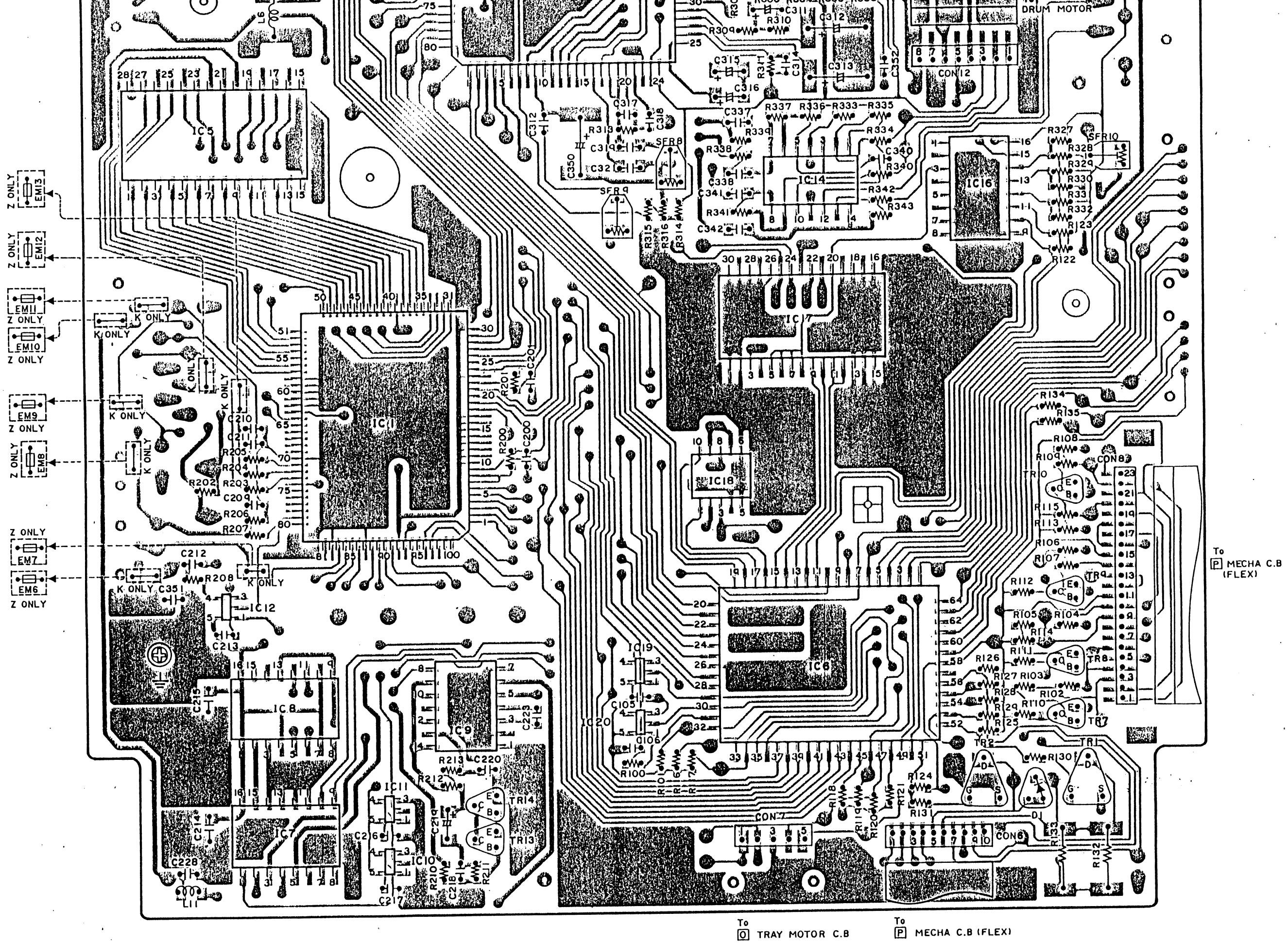

www.manualscenter.com

B RF C.B

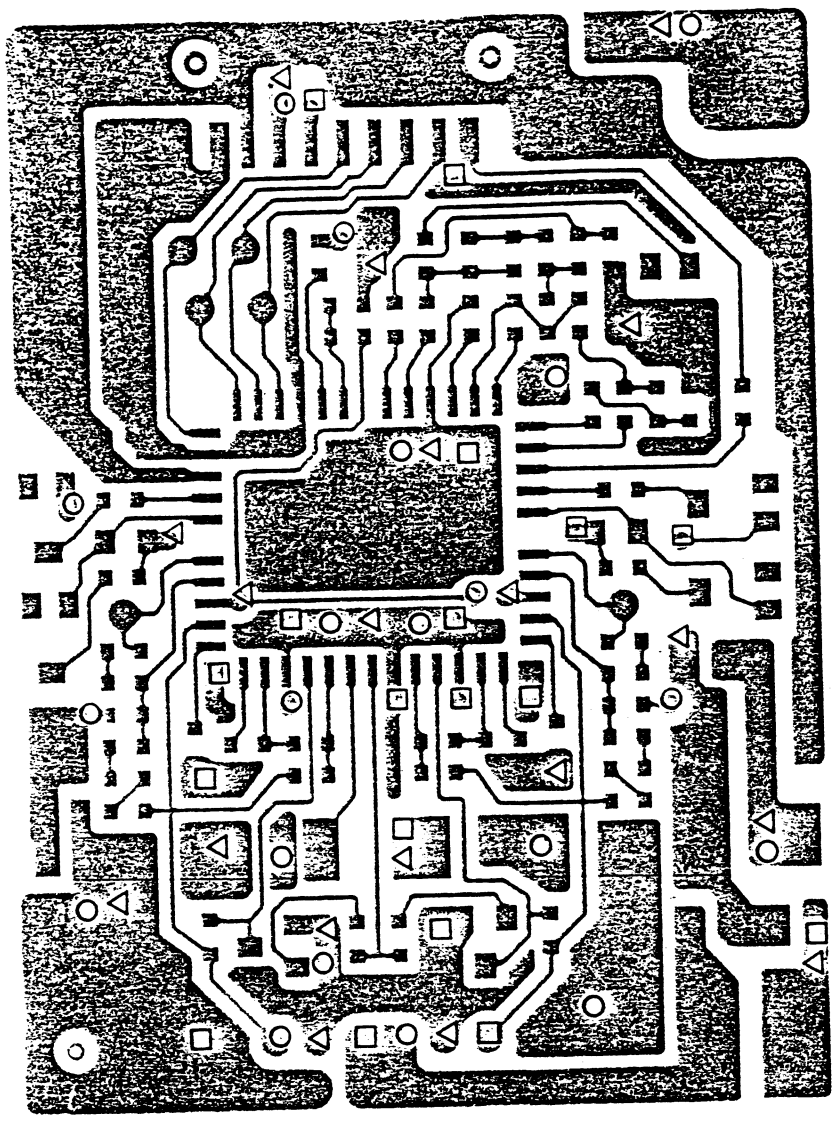

A MAIN C.B

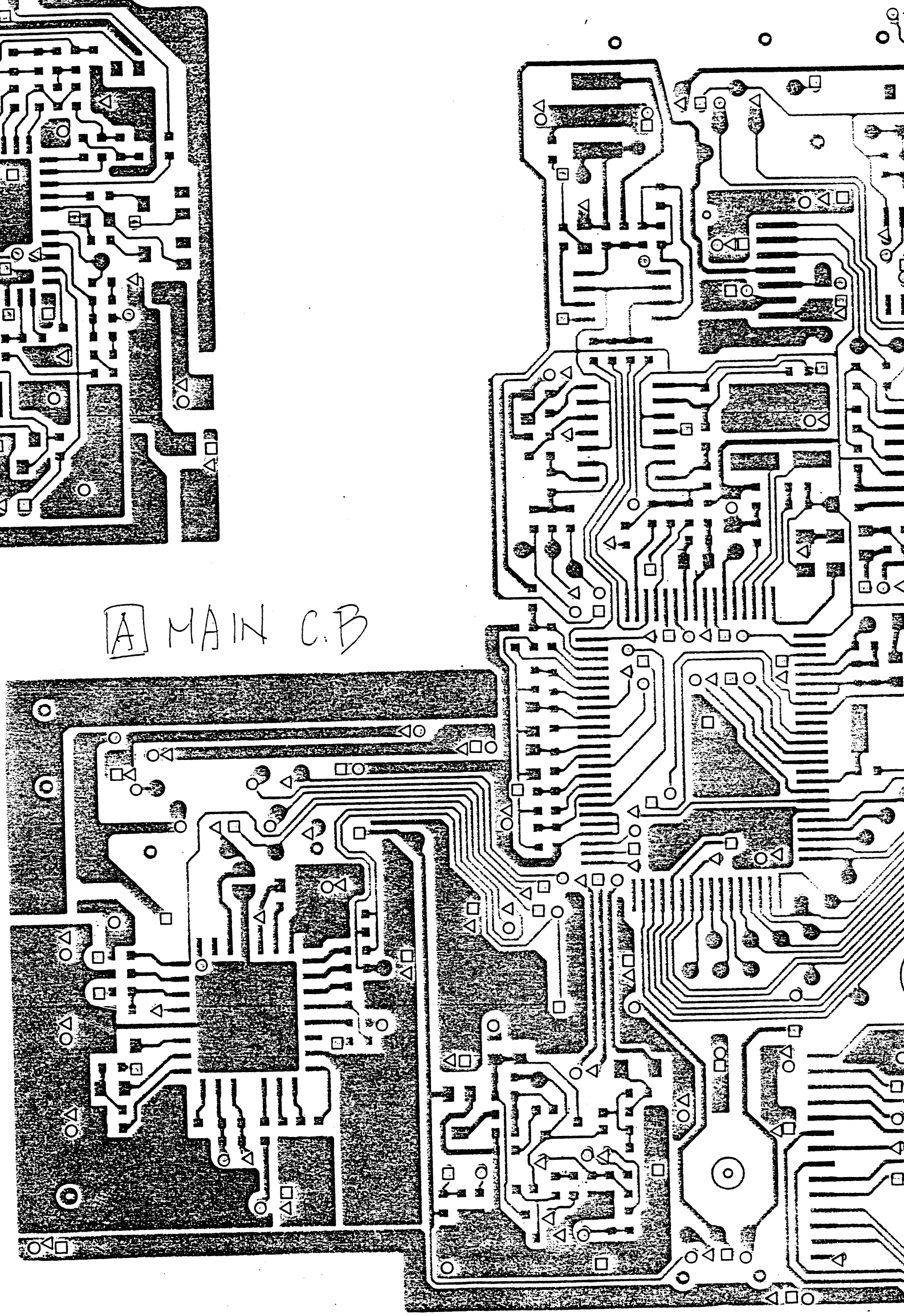

www.manualscenter.com

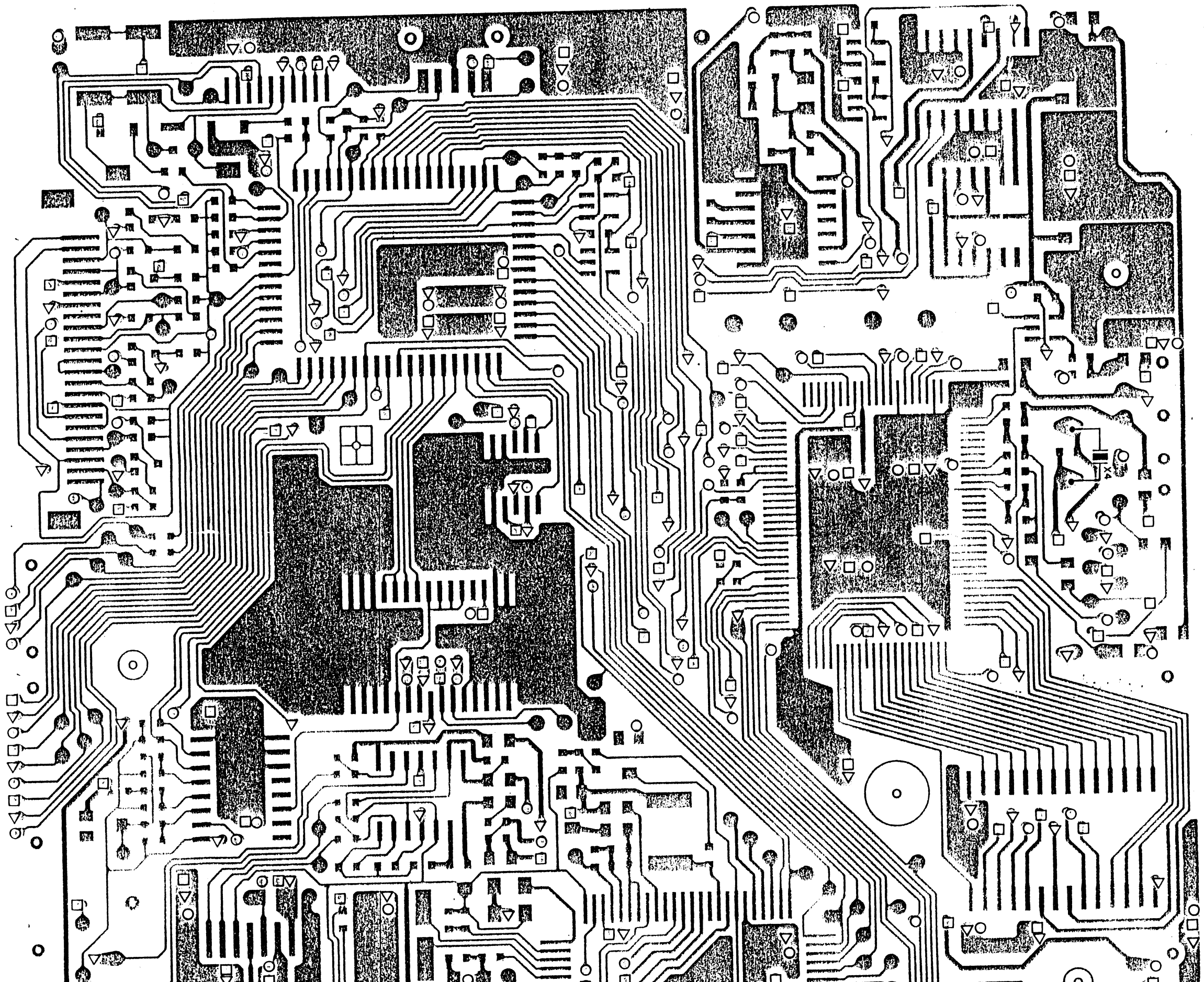

www.manualscenter.com

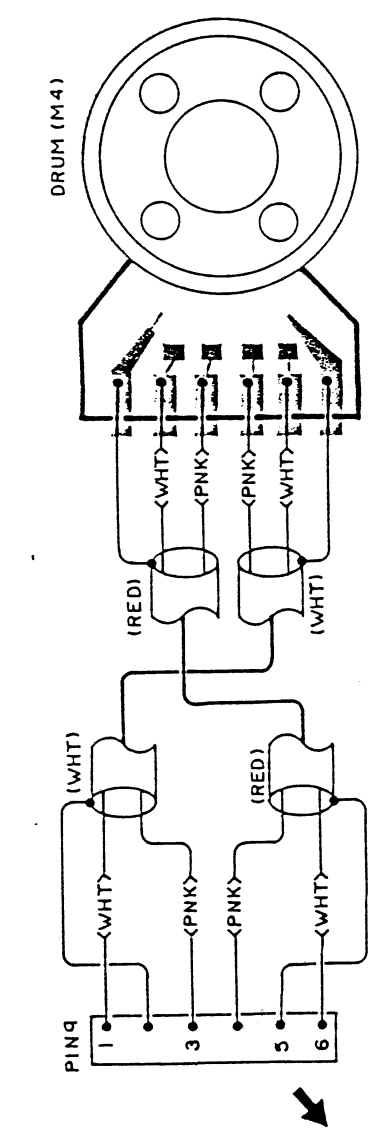

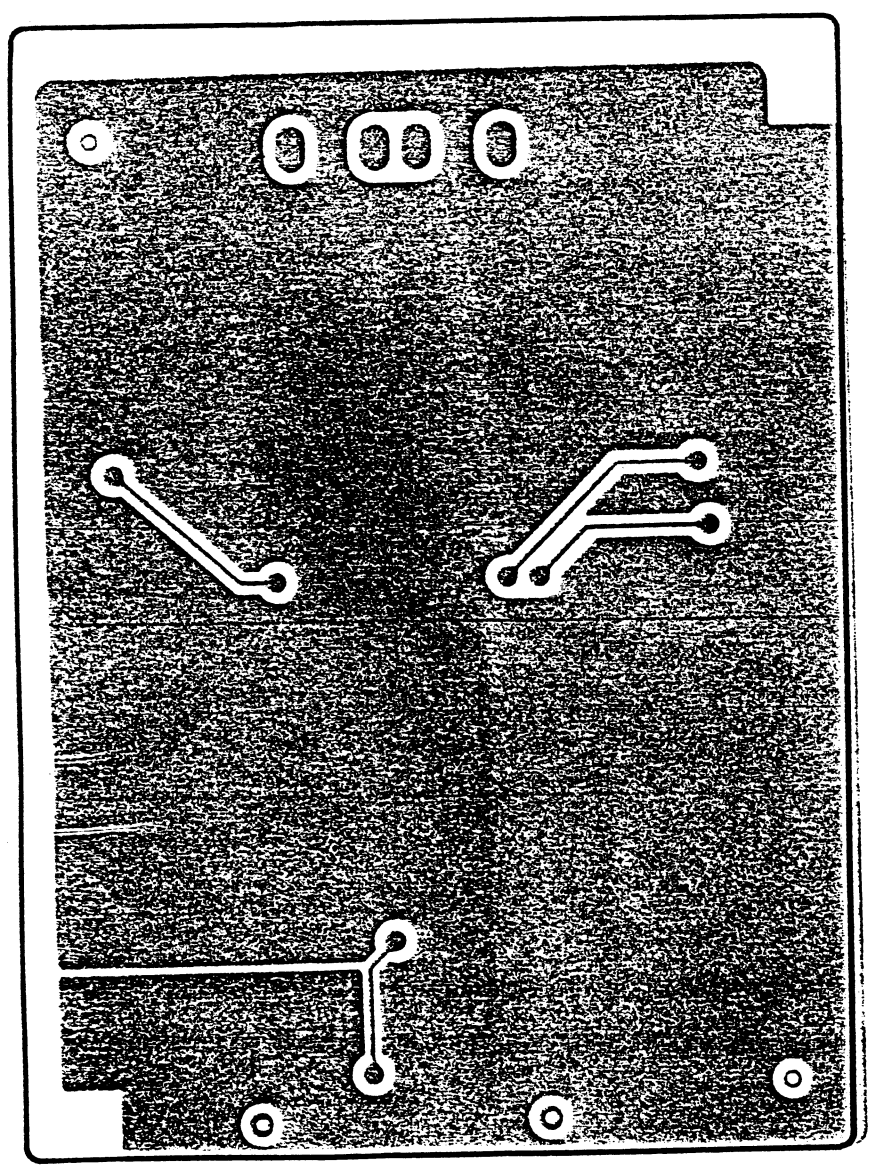

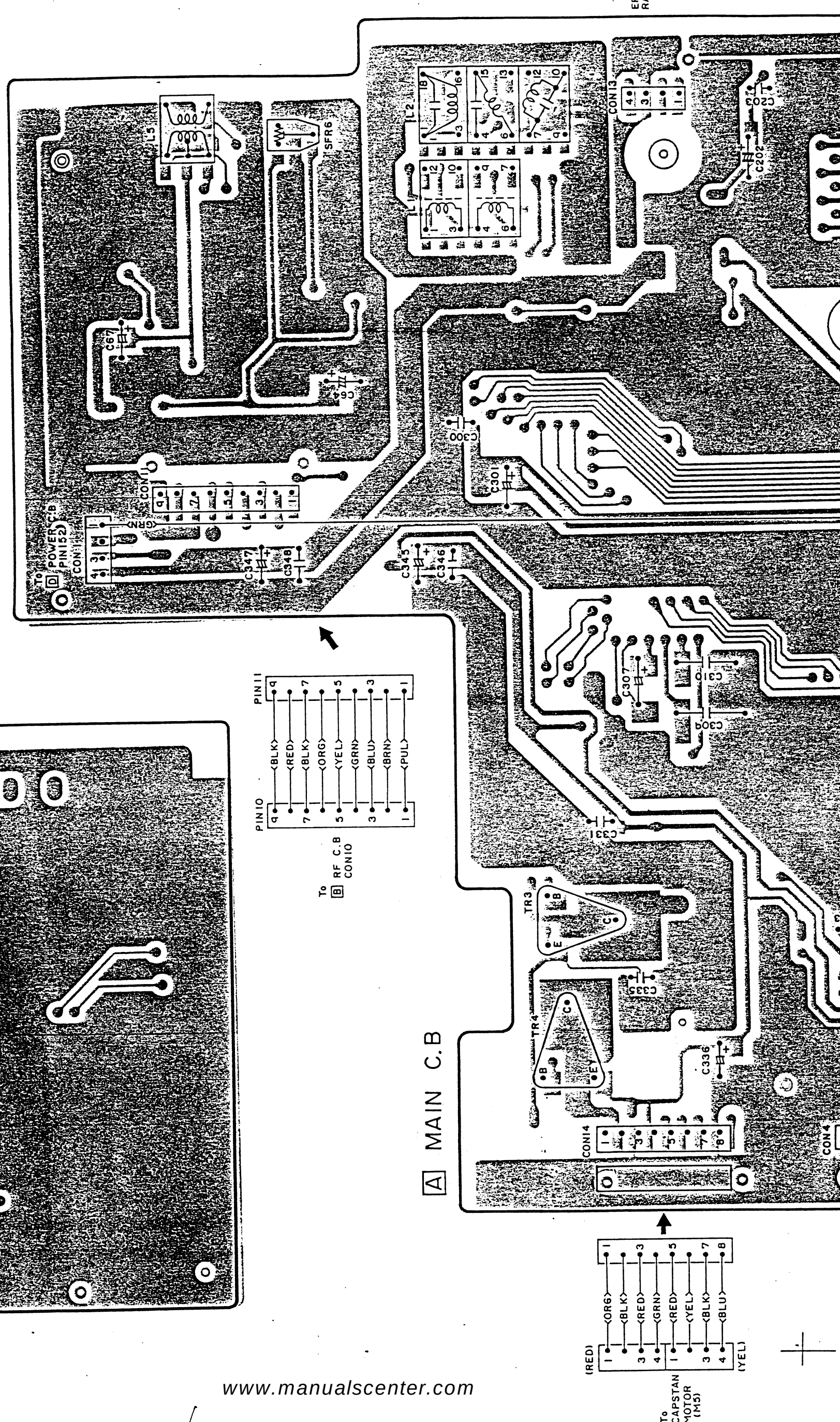

www.manualscenter.com

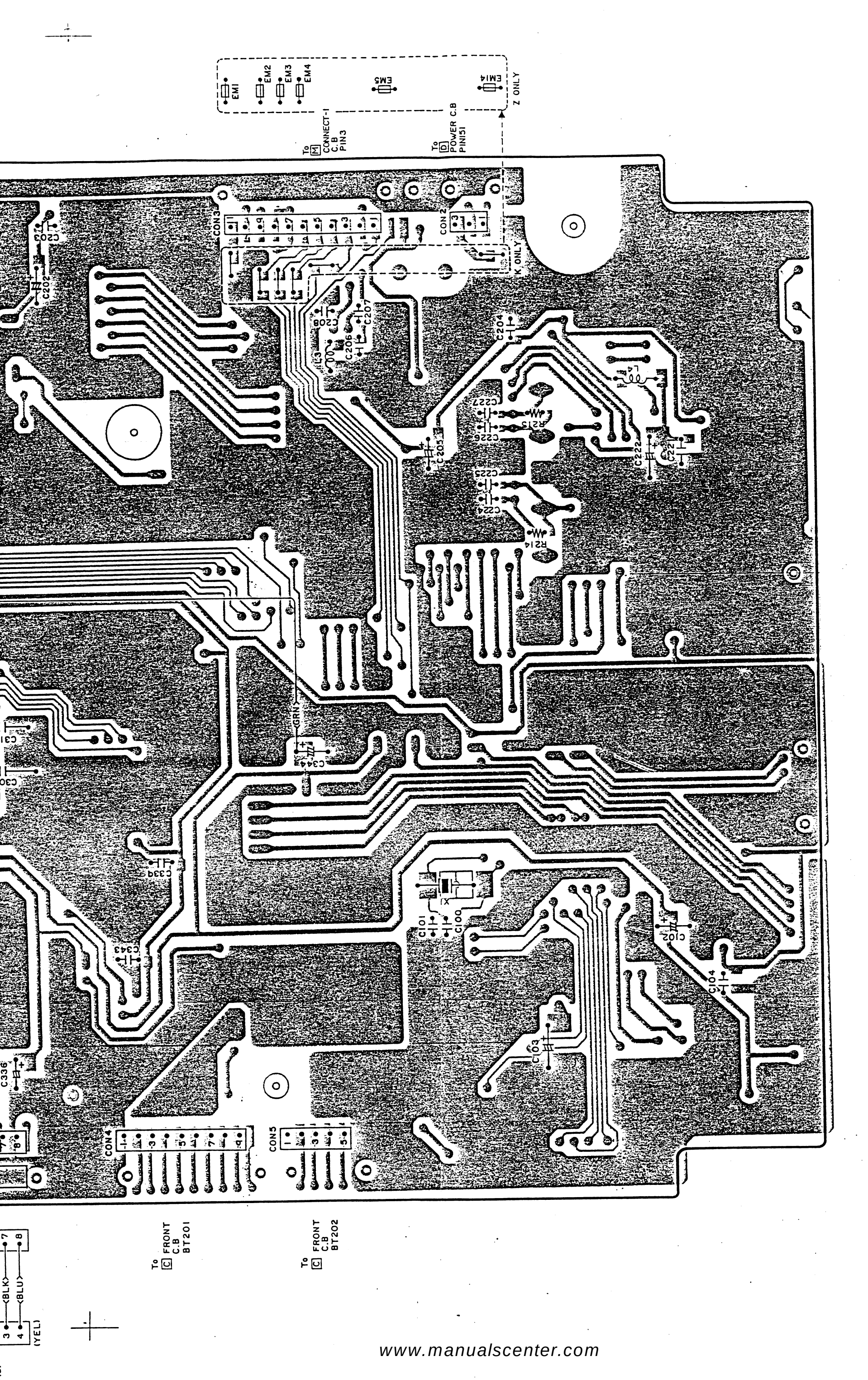

www.manualscenter.com

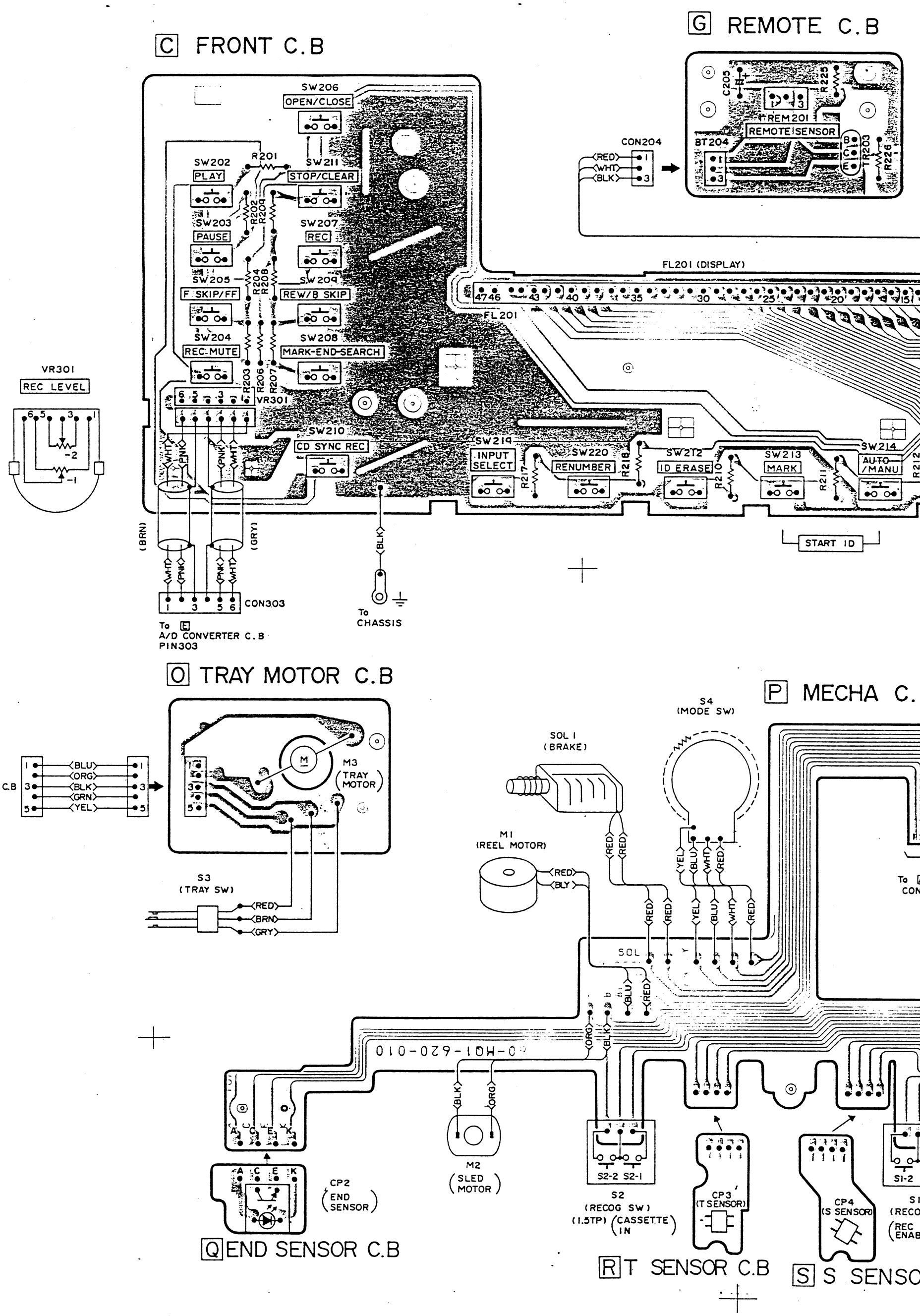

www.manualscenter.com

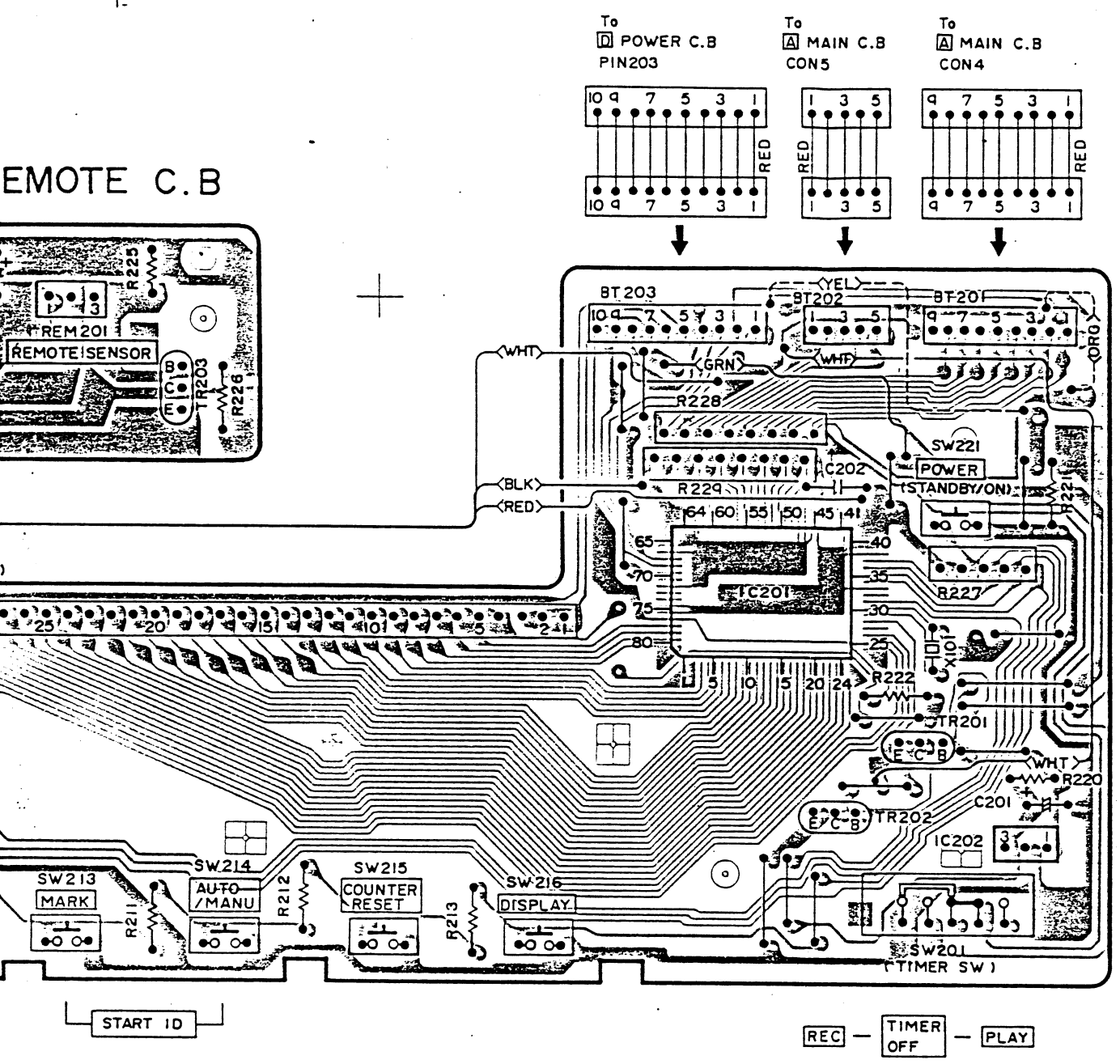

P MECHA C.B (FLEXIBLE C.B)

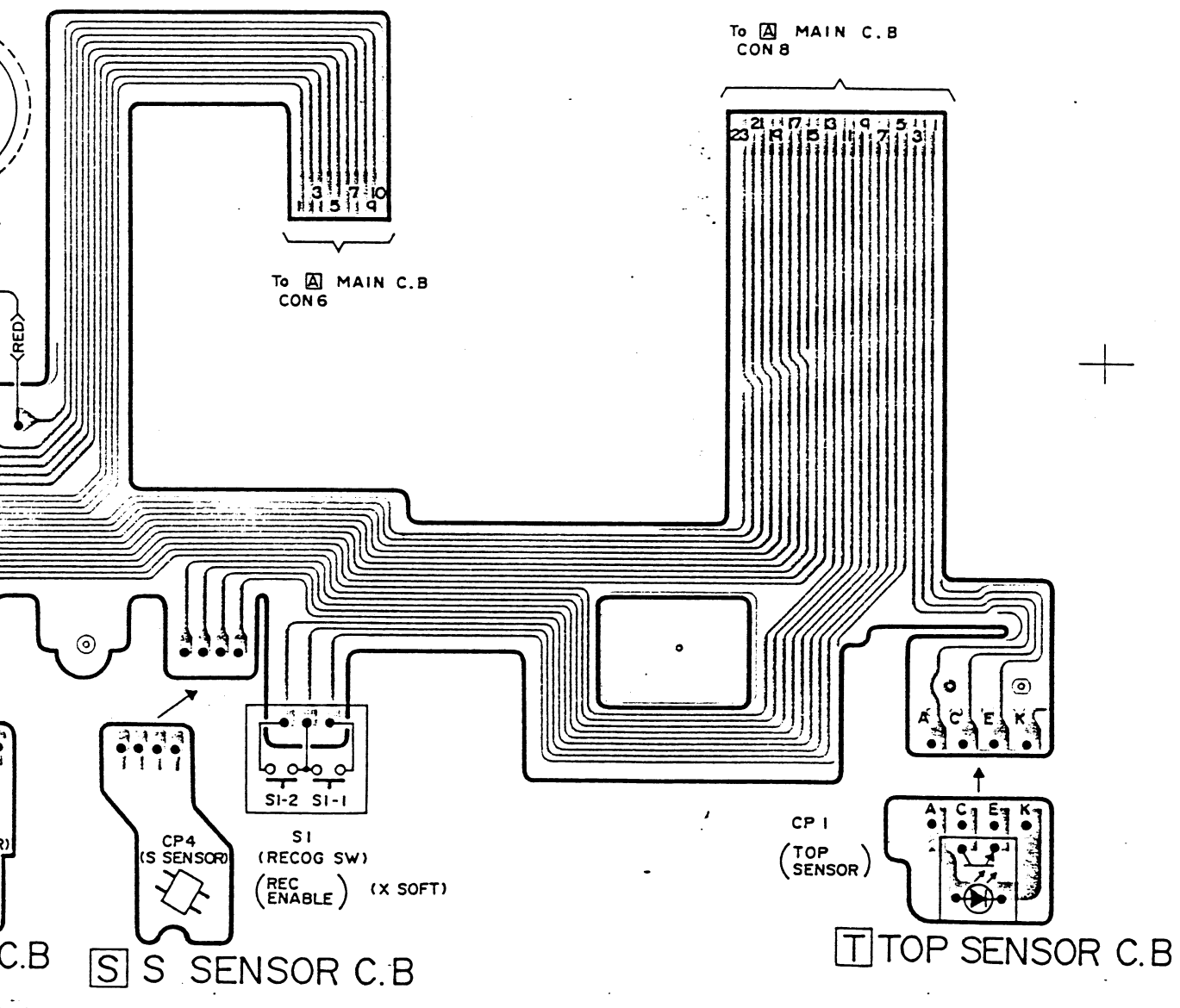

www.manualscenter.com

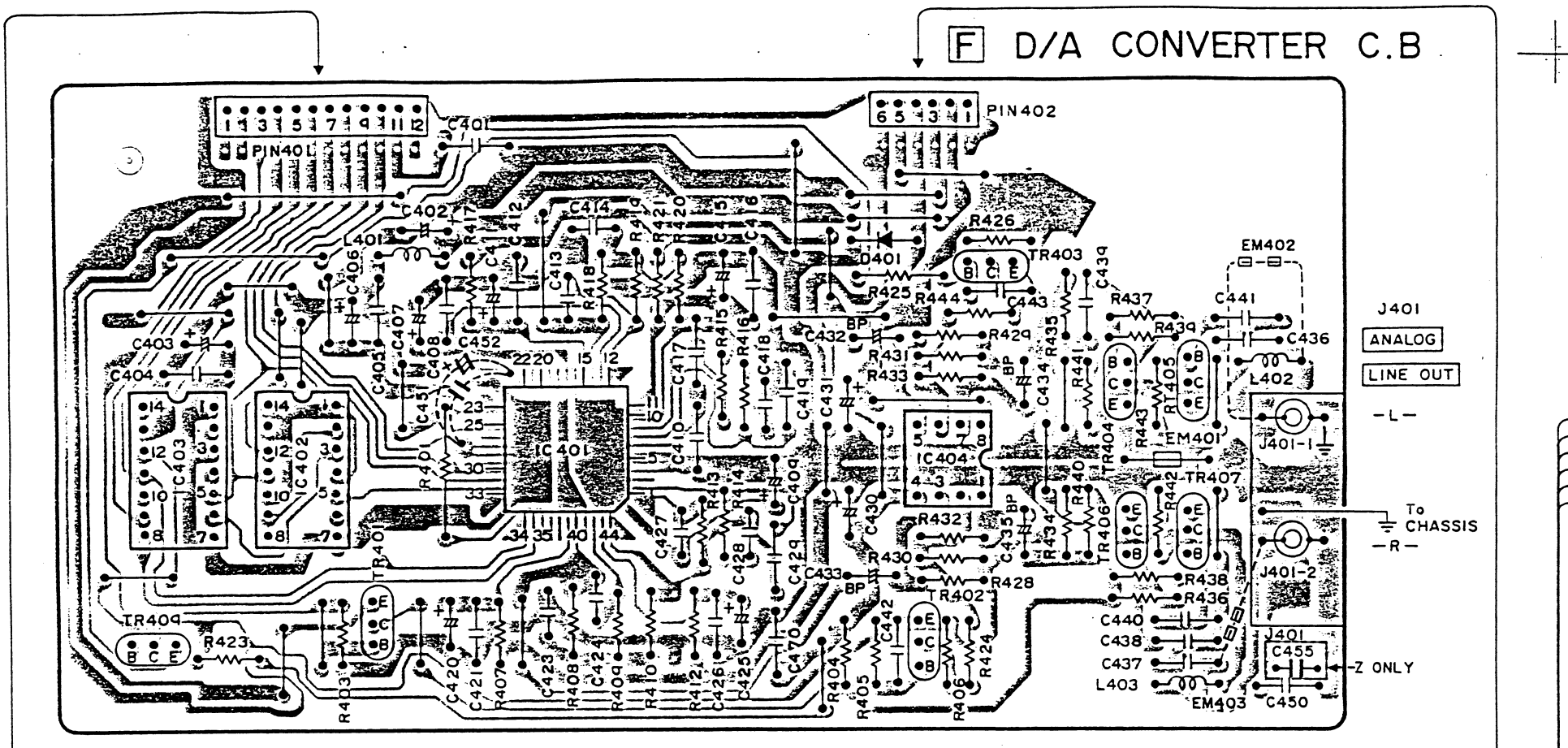

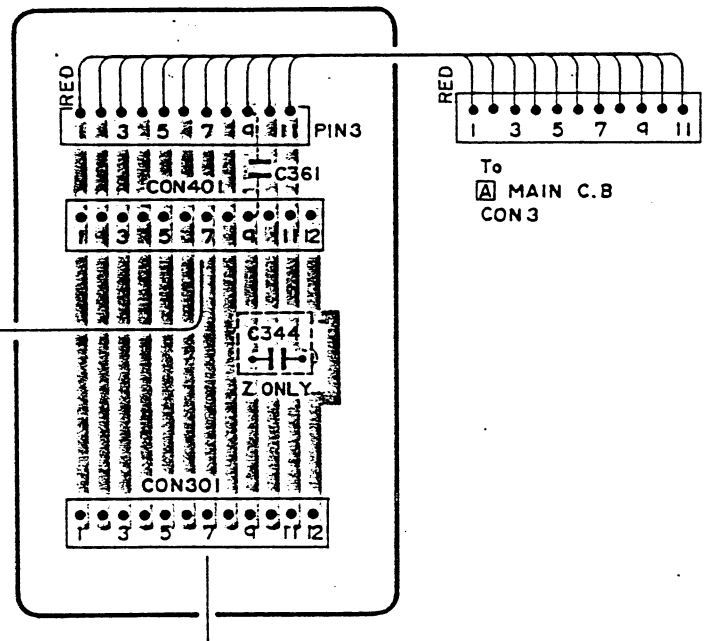

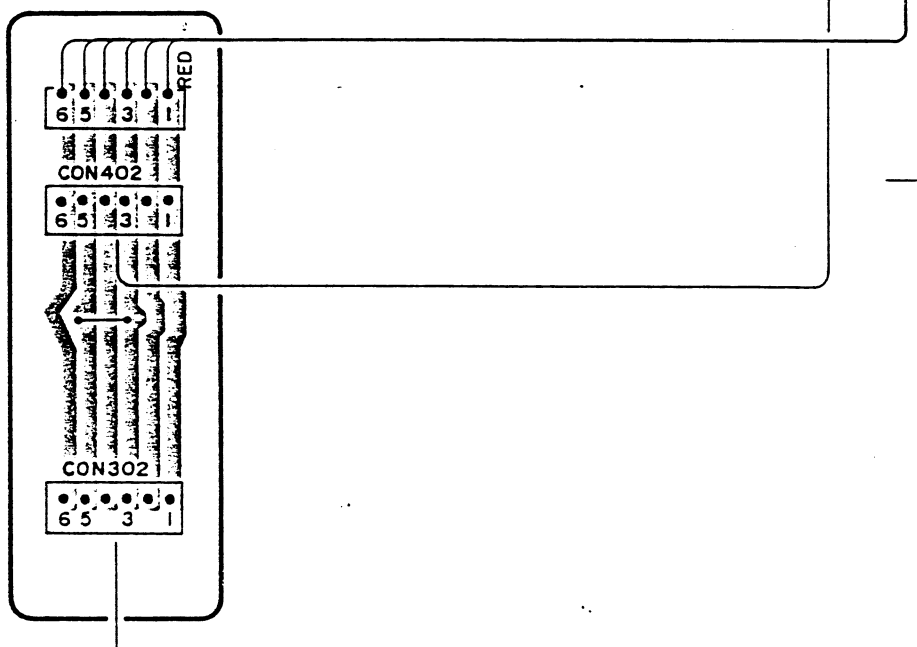

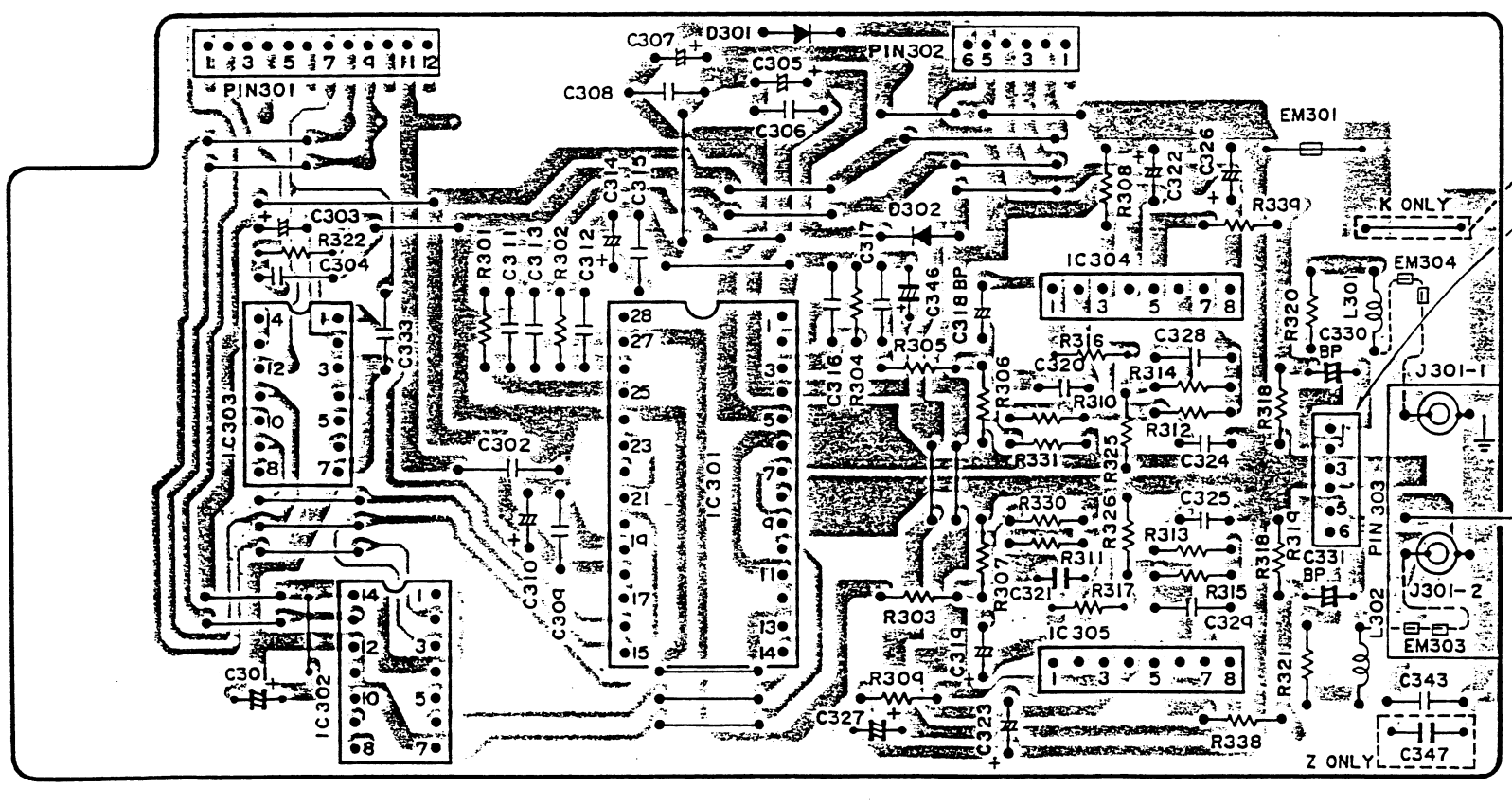

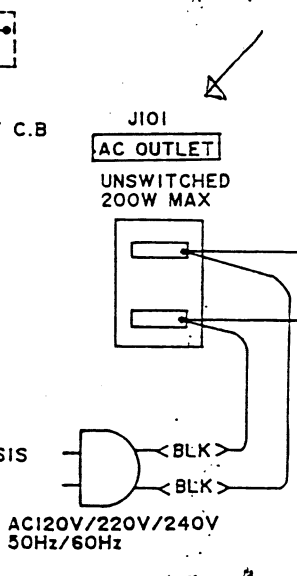

K: AC
E: AC

www.manualscenter.com

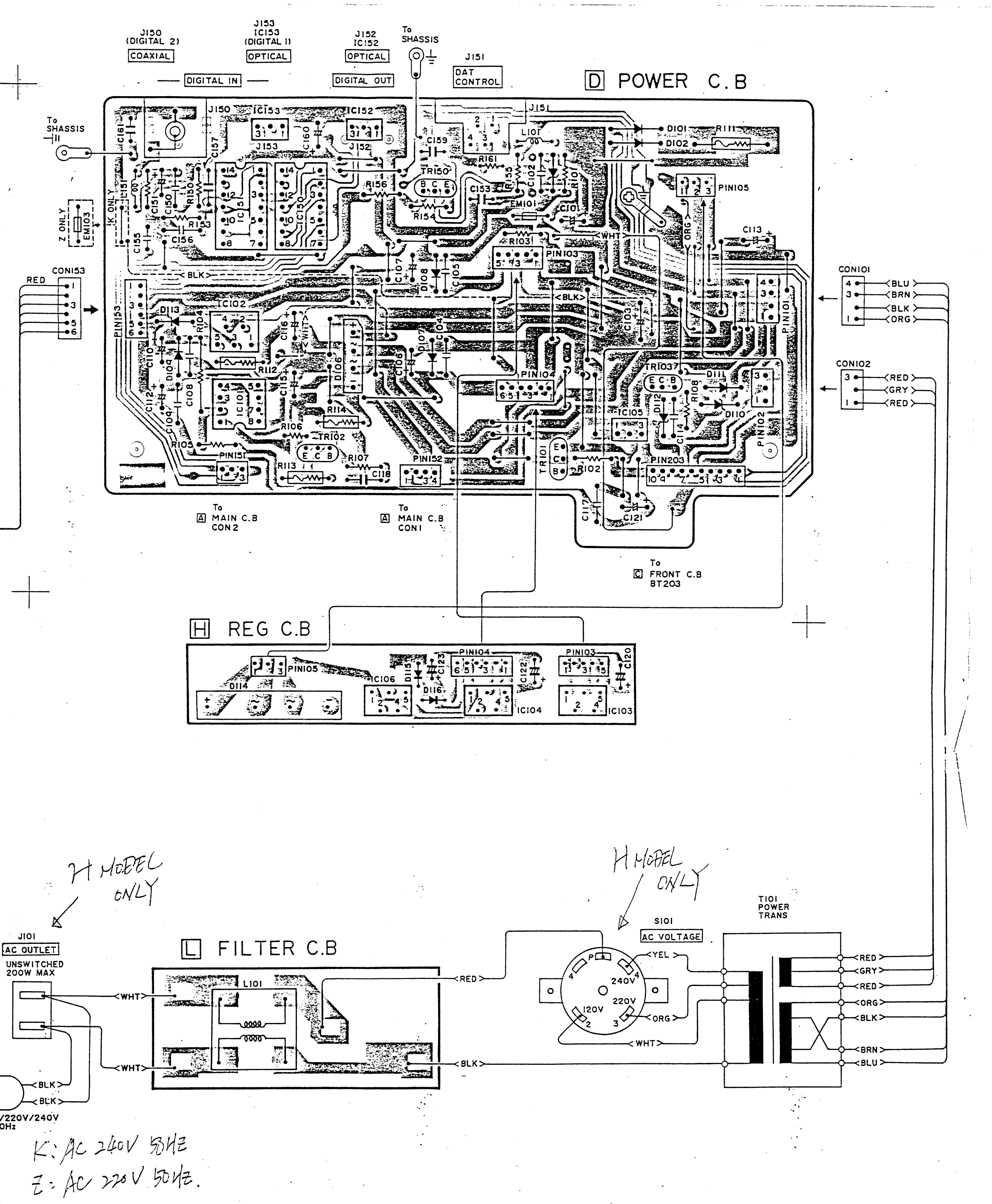

www.manualscenter.com

XD-S260KZ A/D,D/A CONV.POWER C.B 2/2 ﾊﾝﾀﾞﾝ 30%
(21)

EXPLODED VIEW – 1

REF.NO.	PART NO.	DESCRIPTION
A	87-067-684-010	BVT$_2$+2.6-6 W/O SLOT
B	87-067-584-010	BVT$_2$+3-6
C	87-067-660-010	BVT$_2$+3-8 W/O SLOT(B)
D	87-067-581-010	BVT$_2$+3-15
E	87-067-701-010	BVTT+3-6
F	87-067-777-010	BVTT+3-6 W CONVEX(B)
G	87-067-680-010	BVIT3B+3-10
H	87-251-033-410	U+2-4
I	87-743-095-410	UT$_2$+3-8 W/O SLOT(B)
J	87-261-035-410	V+2-6
K	87-261-071-410	V+2.6-4
L	94-918-991-010	CONVEX SCREW
M	82-565-373-010	THRUST SCREW
N	87-761-094-410	VFT$_2$+3-6 W/10 SLOT

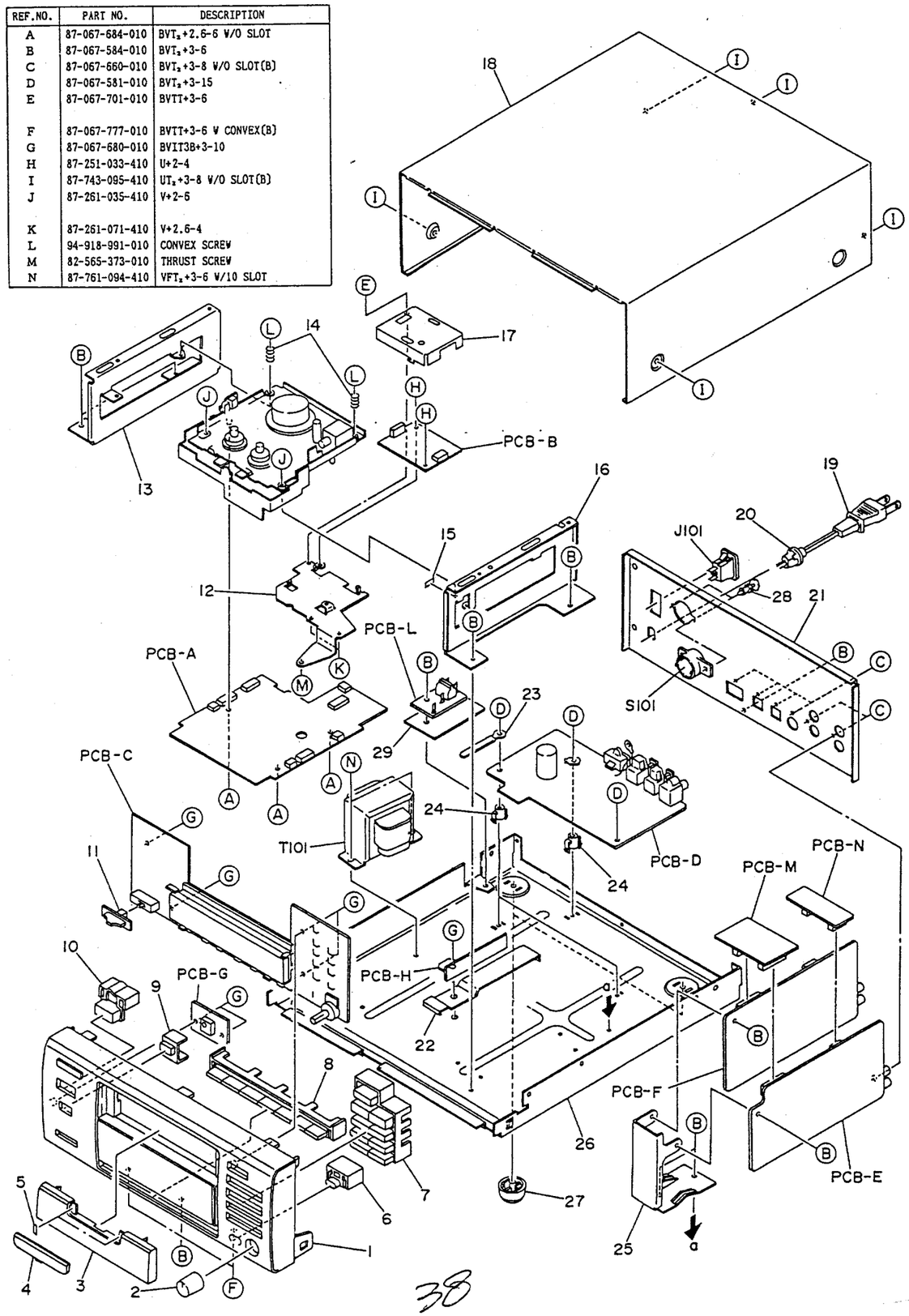

MECHANICAL PARTS LIST

PART NO. CHANGED TO	REF. NO.	PART NO.	DESCRIPTION	COMMON MODEL	Q. TY
	1-1	★09-057-083-010	FRONT CABINET ASSY	*	1
	1-2	★84-790-015-019	KNOB, VOLUME		1
	1-3	★80-MQ1-003-010	TRAY, PANEL	*	1
	1-4	★80-MQ1-008-010	TRAY, WINDOW	*	1
	1-5	★80-HD1-226-010	ADHESIVE-SHEET B		2
	1-6	★80-MQ1-006-010	KEY, REC	*	1
	1-7	★80-MQ1-005-010	KEY, PLAY	*	1
	1-8	★80-MQ1-007-010	KEY, DISPLAY	*	1
	1-9	★80-VT1-009-010	SENSOR, LENS		1
	1-10	★80-VX1-007-010	BUTTON, POWER		1
	1-11	★80-MQ1-010-010	KNOB, SLIDE	*	1
	1-12	---	HOLDER, RF		1
	1-13	★80-MQ1-202-010	HOLDER, MECHANISM L	*	1
	1-14	★84-731-233-010	C-SPRING, MD		2
	1-15	★89-HD1-278-010	SHEET, PWB		1
	1-16	★80-MQ1-203-010	HOLDER, MECHANISM R	*	1
	1-17	★80-MQ1-207-110	COVER, SHIELD	*	1
	1-18	★80-MQ1-012-010	CABINET, STEEL	*	1
	1-19	★87-034-761-010	AC CORD ASSY(H)		1
	1-19	★87-034-760-010	AC CORD ASSY(K)		1
	1-19	★82-187-797-019	AC CORD ASSY(Z)		1
	1-20	★87-085-184-010	BUSHING, AC CORD(H)		1
	1-20	★87-085-178-010	BUSHING, AC CORD(K)		1
	1-20	★87-085-185-010	BUSHING, AC CORD(Z)		1
	1-21	★80-MQ1-028-010	PANEL, REAR(H)	*	1
	1-21	★80-MQ1-026-010	PANEL, REAR(K)	*	1
	1-21	★80-MQ1-025-010	PANEL, REAR(Z)	*	1
	1-22	★80-MQ1-214-010	HOLDER, IC	*	1
	1-23	---	BINDER, WIRE		1
	1-24	---	HOLDER, P.C.B		3
	1-25	---	HOLDER, P.C.B		1
	1-26	---	CHASSIS, MAIN DAT		1
	1-27	★81-675-010-010	FOOT, H10		2
	1-28	★87-084-063-010	RIVET, NYLON 3-5.5(H)		2
	1-29	★80-MQ1-216-010	SHEET, COVER	*	1

EXPLODED VIEW – 2

REF.NO.	PART NO.	DESCRIPTION
A	87-067-584-010	BVT$_2$+3-8 W/O SLOT(B)
B	87-067-701-010	BVTT+3-6
C	87-723-073-410	QT$_2$+2.6-6(B)
D	87-743-073-410	UT$_2$+2.6-6(B)
E	87-743-074-010	UT$_2$+2.6-8
F	87-267-509-310	V+1.4-4
G	87-261-071-410	V+2.6-4
H	87-067-296-010	S-SCREW+2-4
I	87-481-071-210	SCREW VWS+2.6-4
J	87-067-128-010	PW0.8-2-0.25
K	87-067-137-110	PW1.5-3.5-0.25
L	86-511-477-010	PW1.5-3.5-0.25
M	87-067-293-010	PW2-4.5-0.5
N	87-067-473-010	PW2.1-5-0.25
O	87-067-504-010	PW2.2-6-0.25C
P	87-067-483-010	PW2.58-6-0.25

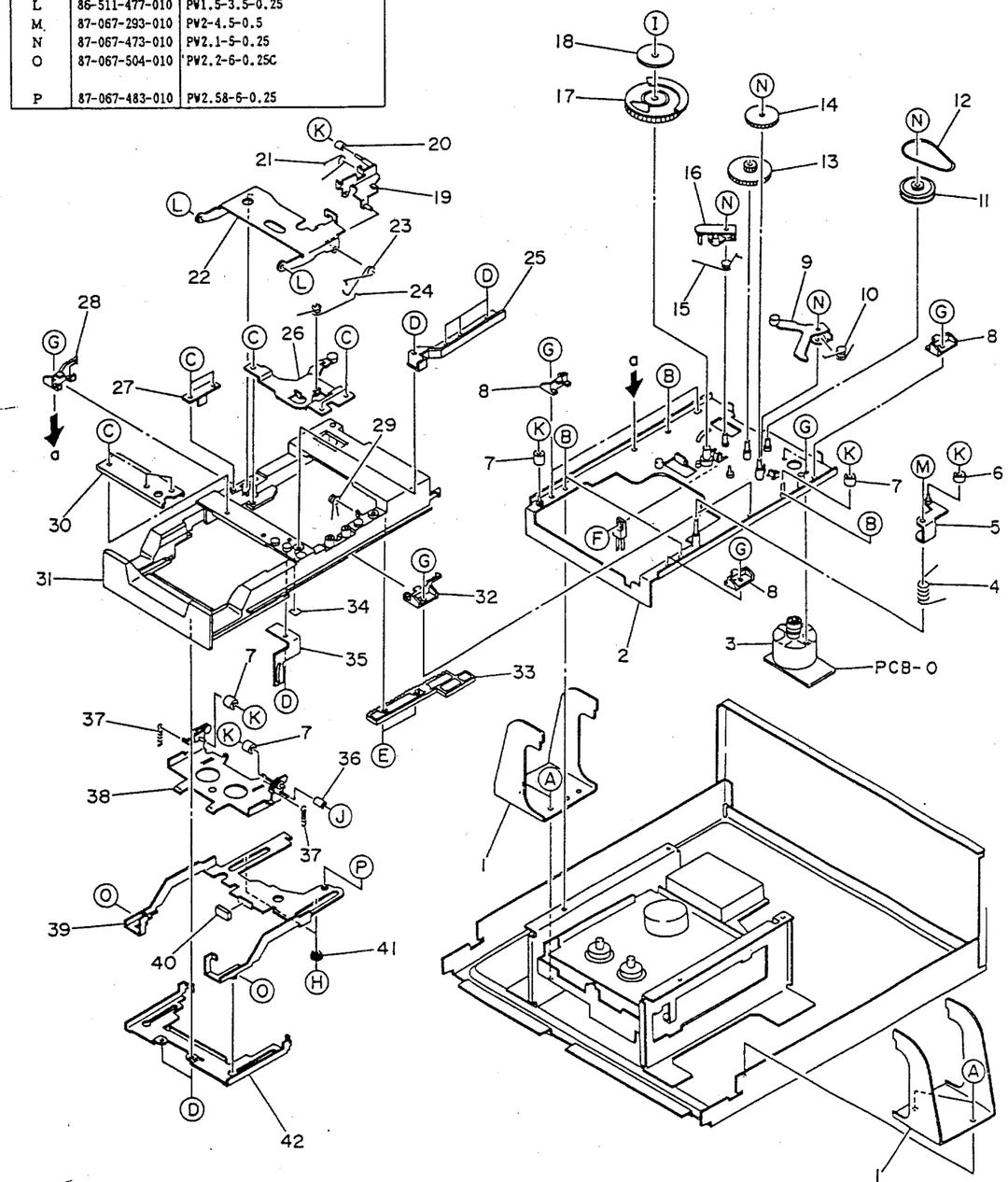

PART NO. CHANGED TO	REF. NO.	PART NO.	DESCRIPTION	COMMON MODEL	Q. TY
	2-1	80-MQ1-208-010	HOLDER, SUB	*	2
	2-2	★84-731-401-110	CASSETTE COMPONENT CHASSIS ASSY		1
	2-3	★09-051-008-010	SLED MOTOR ASSY	*	1
	2-4	★84-731-485-010	T-SPRING, TL HOLDER		1
	2-5	★84-731-480-010	TL SAFETY LEVER ASSY		1
	2-6	★84-731-483-010	COLLAR, TL		1
	2-7	★84-731-416-010	COLLAR, CASSETTE		4
	2-8	★84-731-429-010	GUIDE, TRAY F		4
	2-9	★84-731-471-010	TRAY LOCK LEVER ASSY		1
	2-10	★84-731-478-010	T-SPRING, T-LOCK		1
	2-11	★84-731-427-010	GEAR, RELAY A		1
	2-12	84-731-496-010	BELT, SQ 1.5-32		1
	2-13	★84-731-466-010	GEAR, RELAY B		1
	2-14	★84-731-467-010	GEAR, RELAY C		1
	2-15	★84-731-438-010	T-SPRING, SL LOCK		1
	2-16	★84-731-497-110	SL LOCK ASSY		1
	2-17	★84-731-426-010	CAM		1
	2-18	★84-731-487-010	PLATE, STOPPER		1
	2-19	★84-731-420-110	LEVER CASSETTE BOX ASSY		1
	2-20	★84-731-425-010	COLLAR, CAM		1
	2-21	★84-731-469-010	T-SPRING, CASSETTE LEVER		1
	2-22	★84-731-417-110	ARM CASSETTE BOX ASSY		1
	2-23	★84-731-465-010	T-SPRING, ARM		1
	2-24	★84-731-474-010	T-SPRING, TL		1
	2-25	★84-731-484-010	GUIDE, TL		1
	2-26	★84-731-475-010	LEVER HOLDER ASSY		1
	2-27	★84-731-446-010	LEVER, STOPPER		1
	2-28	★84-731-463-010	GUIDE, TRAY ML		1
	2-29	★84-731-459-010	T-SPRING, TL		1
	2-30	★84-731-499-010	PLATE, T		1
	2-31	★84-731-033-010	TRY		1
	2-32	★84-731-464-010	GUIDE, TRAY MR		1
	2-33	★84-731-445-010	RACK, TRAY		1
	2-34	★87-063-145-010	MYLAR, 6-6-0.15		1
	2-35	★84-731-508-010	HOLDER, GUIDE		1
	2-36	★84-731-415-010	COLLAR, GUIDE		1
	2-37	★84-731-468-010	E-SPRING, CASSETTE GUARD		2
	2-38	★84-731-406-010	BOX ASSY		1
	2-39	★84-731-439-010	PLATE CASSETTE PUSH ASSY		1
	2-40	★84-731-495-010	S-CUSHION, 14-4-2		1
	2-41	★84-731-493-010	COLLAR		2
	2-42	★84-731-442-110	PLATE, TRAY		1

www.manualscenter.com

EXPLODED VIEW – 3

REF.NO.	PART NO.	DESCRIPTION
A	87-251-033-210	U+2-4
B	87-342-035-210	UT_2+2-6
C	87-267-527-310	V+1.7-3
D	87-267-532-310	V+1.7-5.5
E	87-067-435-010	V+2-1.8
F	87-261-031-410	V+2-2
G	87-261-032-210	V+2-3
H	86-544-444-010	V+2-3.5
I	87-261-033-210	V+2-4
J	87-261-035-210	V+2-6
K	87-269-070-110	B+2.6-3(B)
L	87-067-443-010	VF+2-3
M	86-544-440-010	PW1.2-4-0.25
N	87-067-800-010	PW1.5-3.5-0.25 SLT
O	86-544-437-010	PW1.5-3.5-0.5
P	87-081-978-010	PW2.1-3.5-0.25

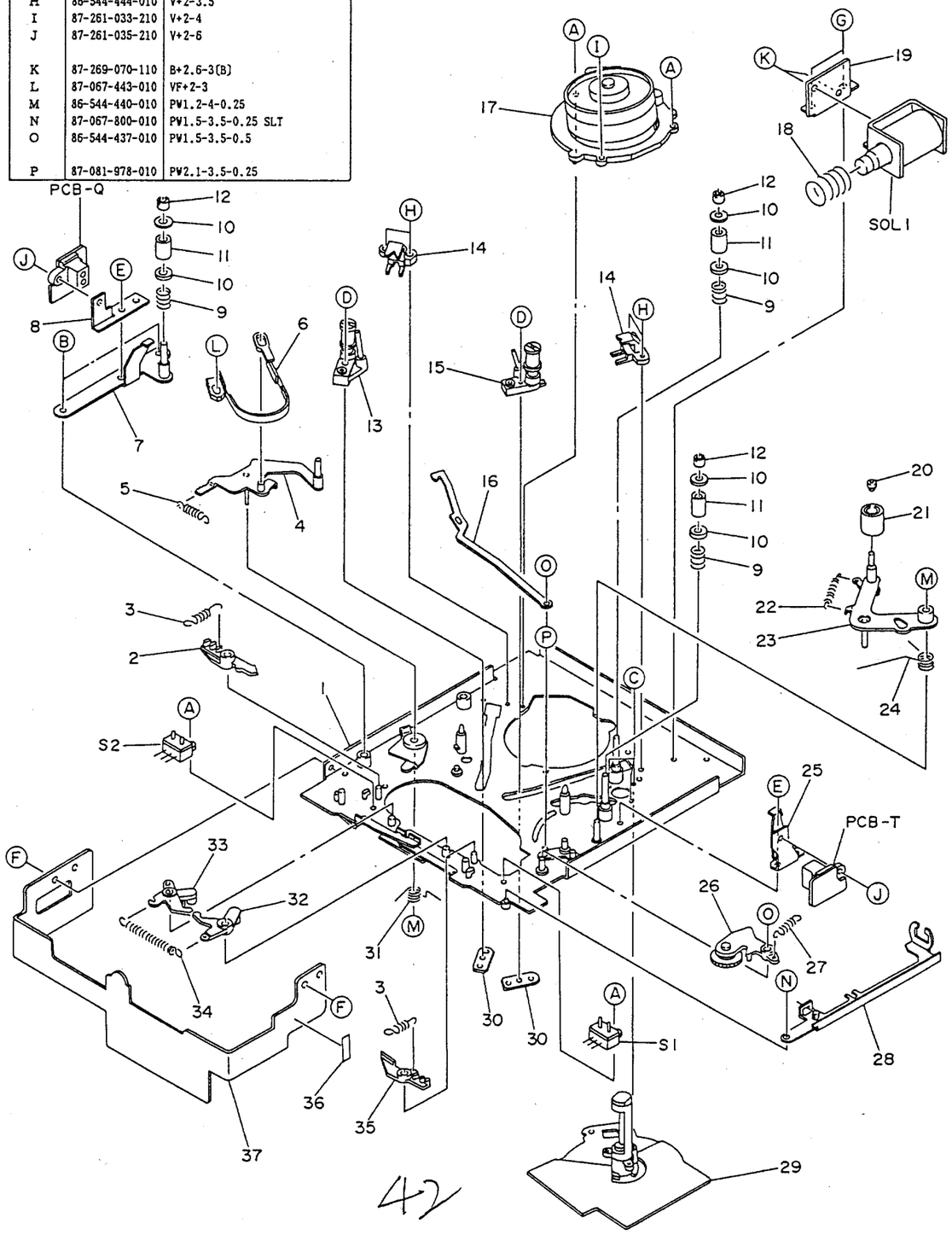

PART NO. CHANGED TO	REF. NO.	PART NO.	DESCRIPTION	COMMON MODEL	Q. TY
	3-1	★86-544-201-510	MECHANISM CHASSIS ASSY	*	1
	3-2	★86-544-395-010	S SOFT BRAKE	*	1
	3-3	★86-544-417-010	E-SPRING, SOFT	*	2
	3-4	★86-544-261-110	TENREG LEVER ASSY	*	1
	3-5	★86-544-423-210	E-SPRING, SLIDE LEVER	*	1
	3-6	★86-544-319-010	TENREG BAND ASSY	*	1
	3-7	★86-544-339-110	LID OPNER ASSY	*	1
	3-8	★86-544-359-010	HOLDER, ES R	*	1
	3-9	★86-544-411-010	C-SPRING, GUIDE	*	3
	3-10	★86-544-347-010	FLANGE, GUIDE	*	6
	3-11	★86-544-371-010	ROLLER A	*	3
	3-12	★86-544-373-010	NUT, GUIDE	*	3
	3-13	★86-544-324-110	SHUTTLE L ASSY	*	1
	3-14	★86-544-336-010	SHUTTLE STOP ASSY	*	2
	3-15	★86-544-328-110	SHUTTLE R ASSY	*	1
	3-16	★86-544-361-010	PLATE, KICK TENSION-RGLT	*	1
	3-17	86-544-617-010	DRUM	*	1
	3-18	★86-544-412-010	C-SPRING, SOLENOIDE	*	1
	3-19	★86-544-357-010	HOLDER, SOLENOIDE	*	1
	3-20	★86-544-288-010	COLLAR, ROLLER PINCH B	*	1
	3-21	86-544-289-010	PINCH ROLLER ASSY	*	1
	3-22	---	E-SPRING, PINCH ROLLER		1
	3-23	86-544-281-310	PINCH ARM ASSY	*	1
	3-24	★86-544-428-010	T-SPRING, PINCH ARM	*	1
	3-25	★86-544-360-010	HOLDER, ES L	*	1
	3-26	★86-544-363-110	RVS MAIN ARM ASSY	*	1
	3-27	★86-544-425-110	E-SPRING, RVS ARM	*	1
	3-28	★86-544-316-110	PLUNGER SLIDER ASSY	*	1
	3-29	★86-544-616-010	MOTOR, CAPSTAN	*	1
	3-30	★86-544-352-010	PLATE, SHUTTLE	*	2
	3-31	★86-544-427-010	T-SPRING, TENREG	*	1
	3-32	★86-544-366-010	BRAKE LEVER ASSY R	*	1
	3-33	★86-544-365-110	BRAKE LEVER ASSY L	*	1
	3-34	★86-544-418-010	E-SPRING, MAIN BRAKE	*	1
	3-35	★86-544-356-010	T SOFT BRAKE ASSY	*	1
	3-36	---	HIMELON 7-14		1
	3-37	★80-MQ1-205-010	HOLDER, FPC		1

EXPLODED VIEW – 4

REF.NO.	PART NO.	DESCRIPTION
A	86-544-443-010	U+2-3.5
B	87-251-034-210	U+2-5
C	87-267-525-310	V+1.7-2.5
D	87-067-435-010	V+2-1.8
E	87-261-032-210	V+2-3
F	87-501-036-210	VF+2-8
G	87-067-796-010	S-SCREW SET-1.4-2
H	86-544-439-010	PW0.85-2.5-0.25
I	87-067-548-010	PW1.2-3-0.25
J	86-544-440-010	PW1.2-4-0.25
K	86-544-437-010	PW1.5-3.5-0.5
L	87-067-293-010	PW2-4.5-0.5

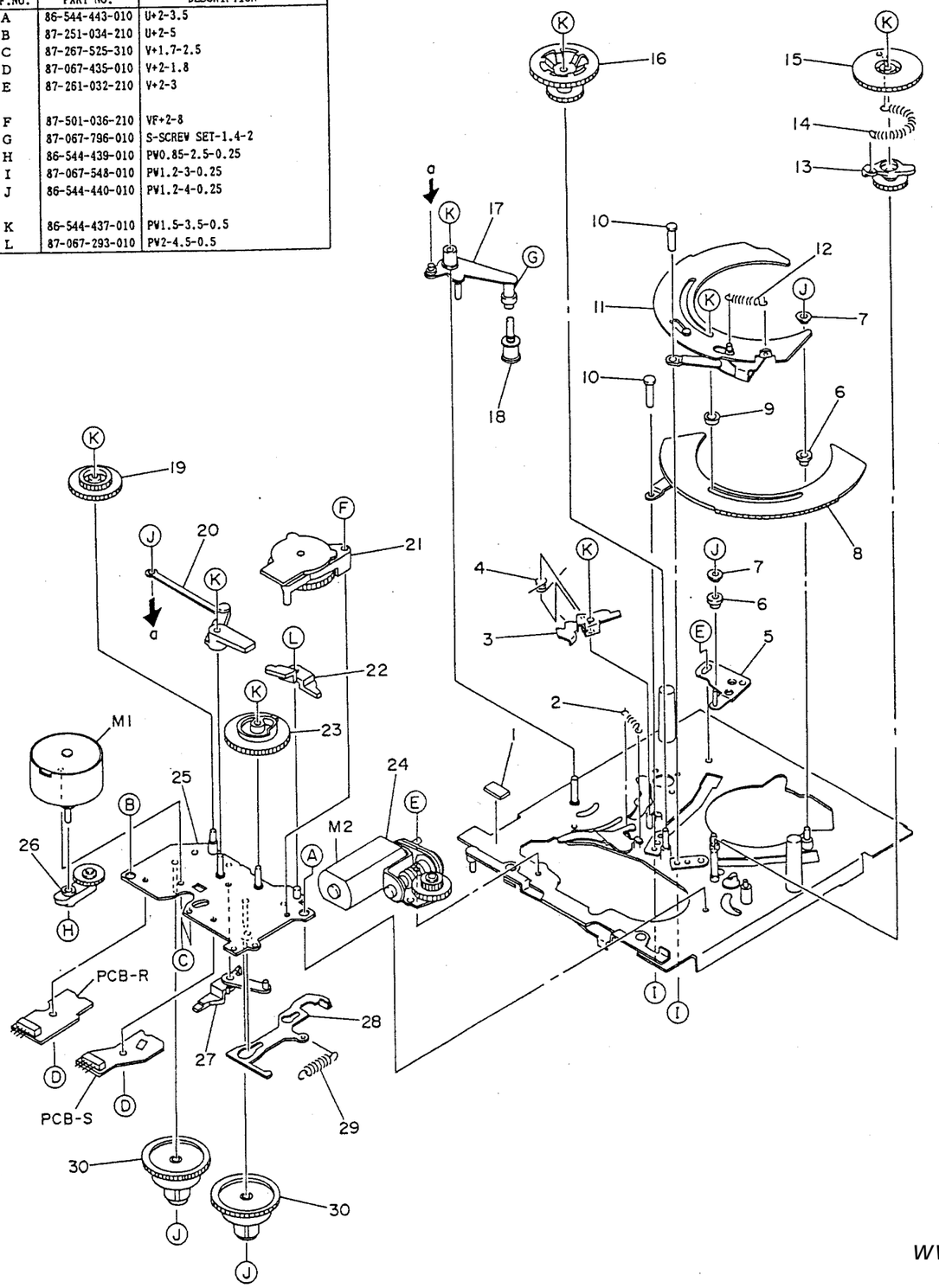

PART NO. CHANGED TO	REF. NO.	PART NO.	DESCRIPTION	COMMON MODEL	Q. TY
	4-1	★86-544-451-010	CUSHION, M 2-5-10	*	1
	4-2	★86-544-426-210	E-SPRING, RVS STOPPER	*	1
	4-3	★86-544-354-010	LEVER, PUSHING	*	1
	4-4	★86-544-429-110	T-SPRING, PINCH ROLLER	*	1
	4-5	★86-544-313-010	PLATE RINK COLLAR ASSY	*	1
	4-6	★86-544-390-010	COLLAR, RINK FRONT	*	2
	4-7	★86-544-389-010	COLLAR, RINK REAR	*	2
	4-8	★86-544-245-010	RINK GEAR R ASSY	*	1
	4-9	★86-544-374-010	RING, SPACER	*	1
	4-10	★86-544-378-010	SHAFT, SHUTTLE JOINT	*	2
	4-11	★86-544-251-010	GEAR RINK L ASSY	*	1
	4-12	★86-544-420-110	E-SPRING, RING GEAR	*	1
	4-13	★86-544-385-010	GEAR, DRIVE C	*	1
	4-14	★86-544-421-010	E-SPRING, DRIVE GEAR	*	1
	4-15	★86-544-386-010	GEAR, DRIVE D	*	1
	4-16	★86-544-384-010	GEAR, DRIVE B	*	1
	4-17	★86-544-271-010	LEVER D ASSY	*	1
	4-18	---	SHAFT, CALKING B		1
	4-19	★86-544-383-010	GEAR, DRIVE A	*	1
	4-20	★86-544-301-010	LEVER ASSY	*	1
	4-21	86-544-603-010	SWITCH, MODE	*	1
	4-22	★86-544-392-010	LEVER, C	*	1
	4-23	★86-544-387-010	GEAR, CAM	*	1
	4-24	---	MECHANISM HOLDER ASSY		1
	4-25	★86-544-231-110	SUB CHASSIS ASSY	*	1
	4-26	★86-544-362-110	AUTO REVERSE LEVER ASSY	*	1
	4-27	★86-544-391-010	LEVER, B	*	1
	4-28	★86-544-351-010	PLATE, SAFETY BRAKE	*	1
	4-29	★86-544-419-010	E-SPRING, BRAKE FREE	*	1
	4-30	★86-544-452-010	REEL TABLE ASSY	*	2

www.manualscenter.com