ADDITIONAL

Service Manual

PIONEER®
The future of sound and vision.

• DEH-55/UC

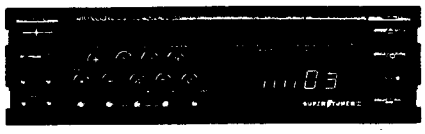

ORDER NO.
CRT 1201

HIGH-POWER COMPACT DISC PLAYER WITH FM/AM TUNER

DEH-55 UC

HIGH-POWER COMPACT DISC PLAYER WITH FM/MW/LW TUNER

DEH-55 EW, EI
DEH-55SDK WG

COMPACT disc DIGITAL AUDIO

Note:

- **This service manual is designed to be used together with Model DEH-66 and DEH-66SDK Service Manual (CRT1166). Refer to it for disassembly and adjustment, etc. which are not shown in this manual.**
- **See the separate manual CX-173 (CRT1161) for the CD mechanism description.**
- **See the service manual CDX-3 (CRT1177) for CD mechanism circuit description.**

CONTENTS

1. SPECIFICATIONS 2
2. ELECTRICAL PARTS LIST 3
3. SCHEMATIC CIRCUIT DIAGRAM (TUNER DEH-55/EW, EI) 11
4. CONNECTION DIAGRAM (TUNER DEH-55/EW, EI) 15
5. SCHEMATIC CIRCUIT DIAGRAM (TUNER DEH-55SDK/WG) 19
6. CONNECTION DIAGRAM (TUNER DEH-55SDK/WG) 23
7. SCHEMATIC CIRCUIT DIAGRAM (TUNER DEH-55/UC) 27
8. CONNECTION DIAGRAM (TUNER DEH-55/UC) 31
9. SCHEMATIC CIRCUIT DIAGRAM (CD MECHANISM) 35
10. CONNECTION DIAGRAM (CD MECHANISM) 39
11. EXPLODED VIEW 46
12. CD MECHANISM EXPLODED VIEW 50
13. PACKING METHOD 54

http://www.manualscenter.com

PIONEER ELECTRONIC CORPORATION 4-1, Meguro 1-Chome, Meguro-ku, Tokyo 153, Japan
PIONEER ELECTRONICS SERVICE INC. P.O. Box 1760, Long Beach, California 90801 U.S.A.
PIONEER ELECTRONICS OF CANADA, INC. 505 Cochrane Drive, Markham, Ontario L3R 6B8 Canada
PIONEER ELECTRONIC [EUROPE] N.V. Keetberglaan 1, 2740 Beveren, Belgium
PIONEER ELECTRONICS AUSTRALIA PTY. LTD. 178-184 Boundary Road, Braeside, Victoria 3195, Australia TEL: [03] 580-9911

© PIONEER ELECTRONIC CORPORATION 1989
FK FEB. 1989 Printed in Japan

1. SPECIFICATIONS

• DEH-55/UC

General
Power source ..... 14.4 V DC (10.8–15.6 V allowable)
Grounding system ..... Negative type
Max. current consumption ..... 5.0 A
Dimensions (chassis) ..... 178 (W) × 50 (H) × 150 (D) mm
[7 (W) × 2 (H) × 5–7/8 (D) in.]
(nose) ..... 170 (W) × 46 (H) × 16 (D) mm
[6–3/4 (W) × 1–3/4 (H) × 5/8 (D) in.]
Weight ..... 1.8 kg(4 lbs.)

Amplifier
Continuous power output is 10 W per channel min. into 4 Ω, both channels driven 50 to 15,000 Hz with no more than 5 % THD.
Max. power output ..... 20 W + 20 W (EIAJ)
Load impedance ..... 4 Ω (4–8 Ω allowable)
Max. output level/
output impedance (pre out) ..... 500 mV/1 kΩ
Tone controls (bass) ..... ± 10 dB (100 Hz)
(treble) ..... ± 10 dB (10 kHz)
Loudness contour ..... + 10 dB (100 Hz), + 7 dB (10 kHz)
(volume: – 30 dB)

CD Player
System ..... Compact disc audio system
Usable discs ..... Compact disc
Signal format ..... Sampling frequency: 44.1 kHz
Number of quantization bits: 16; linear
Frequency characteristics ..... 5–20,000 Hz (± 1 dB)
Signal-to-noise ratio ..... 85 dB (1 kHz) (IHF-A network)
Dynamic range ..... 87 dB (1 kHz)
Wow and flutter ..... Below measurement range
Distortion factor ..... 0.008% (1 kHz, 0 dB)
Number of channels ..... 2 (stereo)

FM tuner
Frequency range ..... 87.9–107.9 MHz
Usable sensitivity ..... 12 dBf (1.1 μV/75 Ω, mono)
50 dB quieting sensitivity ..... 17 dBf (1.9 μV/75 Ω, mono)
Signal-to-noise ratio ..... 70 dB (IHF-A network)
Distortion ..... 0.3% (at 65 dBf, 1 kHz, stereo)
Frequency response ..... 30–15,000 Hz (± 3 dB)
Stereo separation ..... 40 dB (at 65 dBf, 1 kHz)
Selectivity ..... 70 dB (2ACA) (± 400 kHz)

AM tuner
Frequency range ..... 530 — 1,620 kHz
Usable sensitivity ..... 18 μV (25 dB) (S/N: 20 dB)
Selectivity ..... 50 dB (±10 kHz)

These specifications were determined and are presented in accordance with specification standards established by the Ad Hoc Committee of Car Stereo Manufacturers.

Note:
Specifications and the design are subject to possible modification without notice due to improvements.

• DEH-55/EW, EI, DEH-55SDK/WG

General
Power source ..... 14.4 V DC (10.8–15.6 V allowable)
Grounding system ..... Negative type
Max. current consumption ..... 5.0 A
Dimensions (chassis) ..... 180 (W) x 50 (H) x 150 (D) mm
(nose) ..... 170 (W) x 46 (H) x 16 (D) mm
Weight ..... 1.8 kg

Amplifier
Max. power output ..... 20 W + 20 W (EIAJ)
Continuous power output ..... 11 W + 11 W
(1% dist. at 1 kHz)
Load impedance ..... 4 Ω (4–8 Ω allowable)
Max. output level/
output impedance (pre out) ..... 250 mV/1 kΩ
Tone controls (bass) ..... ± 10 dB (100 Hz)
(treble) ..... ± 10 dB (10 kHz)
Loudness contour ..... + 10 dB (100 Hz), + 7 dB (10 kHz)
(volume: – 30 dB)

CD Player
System ..... Compact disc audio system
Usable discs ..... Compact disc
Signal format ..... Sampling frequency: 44.1 kHz
Number of quantization bits: 16; linear
Frequency characteristics ..... 5–20,000 Hz (± 1 dB)
Signal-to-noise ratio ..... 85 dB (1 kHz) (IEC-A network)
Dynamic range ..... 87 dB (1 kHz)
Wow and flutter ..... Below measurement range
Distortion factor ..... 0.008% (1 kHz, 0 dB)
Number of channels ..... 2 (stereo)

FM tuner
Frequency range ..... 87.5–108 MHz
Usable sensitivity ..... 12 dBf (1.1 μV/75 Ω, mono)
50 dB quieting sensitivity ..... 17 dBf (1.9 μV/75 Ω, mono)
Signal-to-noise ratio ..... 70 dB (IEC-A network)
Distortion ..... 0.3% (at 65 dBf, 1 kHz, stereo)
Frequency response ..... 30–15,000 Hz (± 3 dB)
Stereo separation ..... 40 dB (at 65 dBf, 1 kHz)

MW tuner
Frequency range ..... 531–1,602 kHz
Usable sensitivity ..... 18 μV (25 dB)(S/N: 20 dB)
Selectivity ..... 50dB (± 9 kHz)

LW tuner
Frequency range ..... 153–281 kHz
Usable sensitivity ..... 30 μV (30 dB)(S/N: 20 dB)
Selectivity ..... 50 dB (± 9 kHz)

Note:
Specifications and the design are subject to possible modification without notice due to improvements.

2. ELECTRICAL PARTS LIST

NOTE:

- *For your parts Stock Control, the fast moving items are indicated with the marks ** and *.*
  *** : GENERALLY MOVES FASTER THAN *.*
  This classification shall be adjusted by each distributor because it depends on model number, temperature, humidity, etc.
- *Parts whose parts numbers are omitted are subject to being not supplied.*
- *The part numbers shown below indicate chip components.*
  Chip Resistor
  RS1/8S □□□J, RS1/10S □□□J
  Chip Capacitor (except for CQS.....)
  CKS....., CCS....., CSZS.....

Unit Number :
Unit Name : AM Unit(UC,EW,EI)

MISCELLANEOUS

Mark	Circuit Symbol & No.	Part Name	Part No.
**	IC 201		PA4010
**	Q 201		2SK435
**	Q 202		2SC2458
**	Q 203 204 205		DTC124ES
*	D 201 202		1S2473VH
*	D 203	Variable Capacitance Diode	SVC203-AB
*	D 204 205		1SS133
	L 201	Ferri-Inductor,1mH	CTF1026
	L 202	Ferri-Inductor,22μH	LAU220K
	L 203	Ferri-Inductor,47μH	LAU470K
	L 204	Ferri-Inductor,4.7μH	LAU4R7K
	T 201	Coil	CTB1020
	T 202	Coil	CTB1004
	T 203	Coil	CTB1022 (CTB1021)
	T 204	Coil	CTE1013 (CTE1006)
	T 205	Coil	CTE1014 (CTE1007)
	T 206	Coil	CTE1015 (CTE1008)
	CF 201	Filter	CTF1027 (CTF1041)
	CF 202	Filter	CTF-100
	X 201	Crystal Resonator	CSS1014

RESISTORS

Mark	Circuit Symbol & No.	Part Name	Part No.
	R 201		RS1/10S220J
	R 202		RS1/10S681J
	R 203 206		RS1/10S222J
	R 204		RS1/10S473J
	R 205		RS1/10S470J
	R 207		RS1/10S822J
	R 208 211		RS1/10S103J
	R 209		RD1/4PS470JL
	R 210		RS1/10S682J
	R 212		RS1/8S223J
	R 213		RD1/4PS222JL

CAPACITORS

Mark	Circuit Symbol & No.	Part Name	Part No.
	C 201 209 223 228		CKSQYB103K50
	C 202 212		CKSQYB332K50
	C 203 215 216 219 226		CKSQYF473Z50
	C 204 208 210		CKSQYB223K50
	C 206 207		CCSQCH820J50
	C 211		CEA010M50LL
	C 213		CCSQCH470J50
	C 218		CEA2R2M35NPLL
	C 220		CCSQCH430J50
	C 221		CCSQCH100D50
	C 222		CSZA010K25
	C 224		CEA470M16LL
	C 225		CKSQYB333K25
	C 227		CEA4R7M35LL
	C 229		CEA470M16LL
	C 230		CEA220M6R3LL
	C 232		CCSQCH220J50

Unit Number :
Unit Name : FM Unit(UC,EW,EI)

MISCELLANEOUS

Mark	Circuit Symbol & No.	Part Name	Part No.
**	IC 1(UC)		CWW1116
**	IC 51		LA1140B
**	IC 101		LA2110
**	IC 151		LA3430P
**	Q 1	Chip Transistor	2SA1162
**	Q 2	Chip Transistor	DTC124EK
**	Q 51	Chip Transistor	2SC2712
**	Q 71	Chip Transistor	2SJ106
*	D 151		1S2473VH
	L 1 51	Inductor,15μH	LAU150K
	T 51	Coil	CTC1029
	CF 51 52	Ceramic Filter	CTF-182
	CR 101		CWW-107
	X 151	Ceramic Oscillator	CSS1028 (CSS1022)
**	VR 1(UC)	Semi-fixed,33kΩ(B)	CCP-325
**	VR 1(EW,EI)	Semi-fixed,10kΩ(B)	CCP-322
**	VR 101 152	Semi-fixed,10kΩ(B)	CCP-322
**	VR 151	Semi-fixed,150kΩ(B)	CCP-329
		Front End Unit	CWB1032

RESISTORS

Mark	Circuit Symbol & No.	Part Name	Part No.
R	2 7 152		RS1/10S223J
R	3(UC)		RS1/10S473J
R	4 58 104		RS1/10S682J
R	5(UC)		RS1/10S0R0J
R	5(EW,EI)		RS1/10S471J
R	6(UC)		RS1/8S153J
R	6(EW,EI)		RS1/8S681J
R	21(EW,EI) 22(EW,EI)		RS1/8S0R0J
R	23		RS1/10S0R0J
R	51		RS1/8S0R0J
R	52		RS1/10S331J
R	53 57		RS1/10S473J
R	54		RS1/10S104J
R	55 60		RS1/10S153J
R	56		RS1/8S123J
R	59		RD1/4PS183JL
R	61 62		RS1/10S472J
R	71		RS1/10S474J
R	101		RS1/10S332J
R	102		RS1/10S392J
R	103		RS1/10S183J
R	151		RS1/10S222J
R	153		RS1/8S472J
R	156(UC) 157(UC)		RS1/10S202J
R	156(EW,EI) 157(EW,EI)		RS1/10S332J
R	158		RS1/10S334J

CAPACITORS

Mark	Circuit Symbol & No.	Part Name	Part No.
C	1		CKSQYB102K50
C	2 101 102		CKSQYB103K25
C	4 51 52 53 54 59		CKSQYF473Z50
C	55 62		CCSQSL330J50
C	56 63		CEAR47M50LS2
C	57		CKSQYF104Z25
C	58 156		CEA010M50LS2
C	60		CCSQSL101J50
C	61		CEA4R7M16NPLL
C	70		CCSQCH200J50
C	103 105 161		CEA470M16LS
C	104		CKSQYB182K50
C	151		CKSYF473Z50
C	152		CKSQYB332K50
C	153		CKSQYB223K25
C	154		CKSQYB153K25
C	155		CEA3R3M50LS
C	157		CSZAR22M35
C	158(EW,EI)		CCSQSL681J50
C	159(UC) 160(UC)		CKSYB393K25
C	159(EW,EI) 160(EW,EI)		CKSYB183K25

Unit Number :
Unit Name : Tuner Unit(WG)

MISCELLANEOUS

Mark	Circuit Symbol & No.	Part Name	Part No.
**	IC 51		LA1140B
**	IC 101		KHA115
**	IC 151		MX3S400
**	IC 201		PA4010
**	IC 801		KHA142
**	Q 1	Chip Transistor	2SA1162
**	Q 2	Chip Transistor	DTC124EK
**	Q 51	Chip Transistor	2SC2712
**	Q 71		2SJ105
**	Q 201		2SK435
**	Q 202		2SC2458
**	Q 203 204 205		DTC124ES
*	D 151	Chip Diode	MA151WA
*	D 201 202		1S2473VH
*	D 203	Variable Capacitance Diode	SVC203-AB
*	D 204 205		1SS133
	L 1 51	Inductor	LAU150K
	L 201	Ferri-Inductor	CTF1026
	L 202	Ferri-Inductor	LAU220K
	L 203	Ferri-Inductor	LAU470K
	L 204	Ferri-Inductor	LAU4R7K
	T 51	Coil	CTC1029
	T 201	Coil	CTB1020
	T 202	Coil	CTB1004
	T 203	Coil	CTB1022 (CTB1021)
	T 204	Coil	CTE1013 (CTE1006)
	T 205	Coil	CTE1014 (CTE1007)
	T 206	Coil	CTE1015 (CTE1008)
	CF 51 52	Ceramic Filter	CTF-182
	CF 201	Ceramic Filter	CTF1041 (CTF1027)
	CF 202	Filter	CTF-100
	X 201	Crystal Resonator	CSS1014
	X 801	Ceramic Resonator	CSS1019
**	VR 1 152	Semi-fixed 10kΩ(B)	CCP-322
**	VR 101	Semi-fixed 15kΩ(B)	CCP-323
**	VR 151	Semi-fixed 150kΩ(B)	CCP-329
	G 501	Surge Protector	DSP-201M-S00B
		Front End Unit	CWB1032

http://www.manualscenter.com

RESISTORS

Mark	Circuit Symbol & No.	Part Name	Part No.
R	2		RS1/8S223J
R	4		RS1/8S682J
R	5		RS1/8S471J
R	6		RS1/10S681J
R	7		RS1/10S223J
R	23 51		RS1/10S0R0J
R	52		RS1/10S331J
R	53 57 802		RS1/10S473J
R	54		RS1/10S104J
R	55 60		RS1/10S153J
R	56		RS1/10S123J
R	58		RS1/10S682J
R	59		RD1/4PS183JL
R	61 62		RS1/10S472J
R	71		RS1/10S474J
R	101		RS1/10S332J
R	102		RS1/8S183J
R	103		RS1/8S562J
R	201		RS1/10S220J
R	202		RS1/10S681J
R	203 206		RS1/10S222J
R	204		RS1/10S473J
R	205		RS1/10S470J
R	207		RS1/10S822J
R	208 211		RS1/10S103J
R	209		RD1/4PS470JL
R	210		RS1/10S682J
R	212		RS1/8S223J
R	213		RD1/4PS222JL
R	801		RS1/10S222J

CAPACITORS

Mark	Circuit Symbol & No.	Part Name	Part No.
C	1		CKSQYB102K50
C	2 802		CKSQYB103K50
C	4 54		CKSYF473Z50
C	51 52 53 59		CKSQYF473Z50
C	55 62		CCSQSL330J50
C	56 63		CEAR47M50LS2
C	57		CKSQYF104Z25
C	58		CEA010M50LS2
C	60		CCSQSL101J50
C	61		CEA4R7M16NPLL
C	70		CCSQCH200J50
C	101 105 161		CEA470M16LS
C	152		CKSQYB332K50
C	154		CKSQYB153K25
C	159 160		CKSYB123K50
C	201 209 223 228		CKSQYB103K50
C	202 212		CKSQYB332K50
C	203 215 216 219 226		CKSQYF473Z50
C	204 208 210		CKSQYB223K50
C	206 207		CCSQCH820J50
C	211		CEA010M50LS2
C	213		CCSQCH470J50
C	218		CEA2R2M35NPLL
C	220		CCSQCH430J50
C	221		CCSQCH100D50
C	222		CSZA010K25
C	224		CEA470M16LS
C	225		CKSQYB333K25
C	227		CEA4R7M35LS
C	229		CEA470M16LS
C	230		CEA220M6R3LL
C	232		CCSQCH220J50
C	801		CQMA683J50
C	803	220μF/10V	CCH1015
C	804		CEA4R7M35LS
C	805		CEA220M16LS
C	806		CSZAR33M35

Unit Number :
Unit Name : Amp Unit

MISCELLANEOUS

Mark	Circuit Symbol & No.	Part Name	Part No.
**	IC 551		TA8215L
**	Q 551		2SD1859
*	D 551	Chip Diode	MA3091-L
	L 551	Choke Coil	CTH1023
	R 551 552		RS1/10S682J
	R 553 554		RS1/10S123J
	R 555 556		RD1/4PS181JL
	R 557 558 559 560		RD1/4PS4R7JL
	R 561		RS1/10S821J
	R 562 563 566		RS1/8S0R0J
	R 564 565		RS1/10S0R0J
	C 551 552		CEA4R7M35LL
	C 553 554		CCSQSL271J50
	C 555 556 571		CEA470M10LL
	C 557 558 559 560		CQEA224J63
	C 569	1000μF/16V	CCH-124
	C 570	220μF/10V	CCH1014
	C 572		CKSYF473Z50

Unit Number :
Unit Name : Power Supply Unit

MISCELLANEOUS

Mark	Circuit Symbol & No.	Part Name	Part No.
**	IC 951		M5F7809M
**	IC 952		AN6540
**	IC 953		AN7805R
**	Q 951 953		2SB1243
**	Q 952 954 955		2SB1238
**	Q 956 960	Chip Transistor	2SC2712
**	Q 957	Chip Transistor	UN2210
**	Q 958 959	Chip Transistor	UN2212
*	D 951		ERC05-10B
*	D 952 953 954 955 956 957		ERA15-02VH
	L 951	Choke Coil	CTH1015
	L 952	Choke Coil	CTH1005

RESISTORS

Mark	Circuit Symbol & No.	Part Name	Part No.
	R 952 955 957 959 961 968		RS1/10S223J
	R 953(EW, EI, WG)		RS1/10S152J
	R 954(UC)		RS1/10S152J
	R 956 958 960		RS1/10S222J
	R 962		RS1/10S152J
	R 963		RS1/10S333J
	R 965		RS1/10S104J
	R 966 967		RS1/10S153J
	R 969		RS1/10S103J

CAPACITORS

Mark	Circuit Symbol & No.	Part Name	Part No.
	C 951 952 958		CEA010M50LS2
	C 953	1000μF/16V	CCH1003
	C 954 957	2200μF/16V	CCH1001
	C 955	470μF/16V	CCH-114
	C 956		CEA101M10L2
	C 959(UC)		CEA101M16L2
	C 959(EW, EI, WG)		CEA101M10LL
	C 960		CEA470M16LS
	C 961 962 963 964		CKSQYB153K50
	C 965 966		CCG-105
	C 967		CEA102M16L2

Unit Number :
Unit Name : CD Unit

MISCELLANEOUS

Mark	Circuit Symbol & No.	Part Name	Part No.
**	IC 351		CXA1081M
**	IC 451		M5218FP
**	IC 452		KHA215
**	IC 501		LC7218M
**	IC 601		CXA1082AQ
**	IC 651 652		PA3023
**	IC 655 657		M5218FP
**	IC 656		M5233FP
**	IC 701		CXD1135Q
**	IC 702		CXK5816M-15L
**	IC 703		μPD6355G
**	IC 704		KHA220
**	IC 751		PD4136B
**	IC 752		M51955AFP
**	IC 753 881		M51945AFP
**	IC 754		M54546AL
**	IC 851		M5228FP
**	Q 351		2SB822F
**	Q 451(WG) 452(WG)	Chip Transistor	DTC343TK
**	Q 453(WG)	Chip Transistor	UN5210
**	Q 454(WG) 455(WG)	Chip Transistor	2SD1819
**	Q 502	Chip Transistor	2SC3295
**	Q 503 504 505 506	Chip Transistor	2SC4116
**	Q 507(EW, EI, WG)	Chip Transistor	DTC124EU
**	Q 508 509	Chip Transistor	DTA124EU
**	Q 510 511	Chip Transistor	DTC114TU
**	Q 512 513	Chip Transistor	RN2427
**	Q 514 757 758		2SD1226MF
**	Q 515(WG)		2SD1226MF
**	Q 601 651 652 653	Chip Transistor	UN2211
**	Q 701 705 756 760	Chip Transistor	UN2211
**	Q 702 706 759	Chip Transistor	UN2111
**	Q 703 704	Chip Transistor	2SD1048
**	Q 851 852 855 856	Chip Transistor	DTC343TK
**	Q 853	Chip Transistor	2SD1819
**	Q 854	Chip Transistor	DTA114EU
**	Q 882 883	Chip Transistor	DTC114EU
*	D 451(WG)	Chip Diode	MA141WA
*	D 452 453	Chip Diode	MA3056-L
*	D 501 502 503	Chip Diode	MA141WK
*	D 504	Chip Diode	MA143
*	D 505	Chip Diode	MA3056-M
*	D 506 851 852	Chip Diode	MA141WA
*	D 651		ERA15-02
*	D 652		ERA82-004Y
*	D 653 654 655 656 657 658 659		ERA82-004VH
*	D 661 662		HZS2ALL
*	D 701	Chip Diode	MA151WA
*	D 753	Chip Diode	MA3200-M
*	D 754		HZ6LB1
*	D 755	Chip Diode	MA3062-H
	L 501	Ferri-Inductor	LAU470K
	L 651	Choke Coil	CTH1035
	TH 351	Thermister	CCX1001
	TH 751	Thermister	CCX-021
	IB 851(UC)		CWW1097
	IB 851(EW, EI, WG)		CWW1096
	IB 852		CWW1096
	G 501(EW, EI)	Surge Protector	DSP-201M-S00B
	X 501	Crystal Resonator	CSS1030
	X 701	Crystal Resonator	CSS1027
	X 751	Ceramic Oscillator	CSS-042
**	VR 351	Semi-fixed, 47kΩ (B) × 1, 10kΩ (B) × 2	CCP1005
**	VR 352	Semi-fixed, 47kΩ (B) × 4	CCP1006
**	VR 604	Semi-fixed, 2.2kΩ (B)	HCP-267
**	VR 651	Semi-fixed, 47kΩ (B)	HCP-275
		Buzzer	CPV1007

RESISTORS

Mark	Circuit Symbol & No.	Part Name	Part No.
	R 351		RS1/2P220JL
	R 353 381 536 540 708 709 851 852 881		RS1/10S102J
	R 354 363 378		RS1/10S223J
	R 355 610 625 785		RS1/10S113J
	R 356 357 358 359 669		RS1/10S563J
	R 360 361		RS1/10S124J
	R 362 763		RS1/10S564J
	R 364 365 618 671		RS1/10S105J
	R 366 377 666		RS1/10S562J
	R 367		RS1/10S104J

Mark	Circuit Symbol & No.	Part Name	Part No.
R	379 515 525 710 711		RS1/10S472J
R	380 617 628 682		RS1/10S203J
R	382		RS1/10S363J
R	383		RS1/10S823J
R	384 630		RS1/10S273J
R	451 452		RS1/10S562J
R	453 454		RS1/10S433J
R	455 456 505 521 527 529 537 673 865		RS1/10S473J
R	457(WG)		RS1/10S103J
R	458(WG) 459(WG)		RS1/10S104J
R	460 461 462 853 854 859 860		RS1/10S223J
R	463 464 501 502 503 504 523 530 532		RS1/10S222J
R	506 533 609 614 619 627 773 774		RS1/10S104J
R	511(EW,EI,WG)		RS1/10S561J
R	512(EW,EI,WG)		RS1/10S332J
R	513 517 526 528 531 775		RS1/10S103J
R	514		RS1/10S122J
R	516 524 634		RS1/10S474J
R	518 667 684 686 717		RS1/10S472J
R	519 629		RS1/10S153J
R	520		RS1/10S393J
R	522		RS1/10S221J
R	534 535 538 714 724 725 726 727 787		RS1/10S0R0J
R	541(WG)		RS1/10S221J
R	542(UC)		RS1/10S392J
R	601 602		RS1/10S101J
R	606		RS1/10S224J
R	607 764		RS1/10S683J
R	608		RS1/10S823J
R	611		RS1/10S432J
R	612		RS1/10S623J
R	613		RS1/10S624J
R	616		RS1/10S183J
R	620		RS1/10S332J
R	621		RS1/10S184J
R	622 670 687 696 697 715 718 719 751 752		RS1/10S103J
R	623 765		RS1/10S473J
R	624 882		RS1/10S393J
R	631		RS1/10S272J
R	665 790		RS1/10S821J
R	668 679		RS1/10S392J
R	672		RS1/10S364J
R	674 716		RS1/10S332J
R	676 677 799		RS1/10S201J
R	678		RS1/10S223J
R	680		RS1P1R5JL
R	681		RS1/10S203J
R	683		RS1/10S101J
R	685 692		RS1/10S105J
R	690		RS1/10S272J
R	691 703 755 855		RS1/10S103J
R	694 786		RS1/10S822J
R	701		RS1/10S100J
R	712 713		RS1/10S392J
R	721		RS1/10S4R7J
R	728 778		RS1/10S0R0J
R	753 754 756 779		RS1/10S681J
R	762		RS1/10S391J
R	766 767		RS1/10S681J
R	770 771		RS1/10S222J
R	781		RS1/10S303J
R	782		RS1/10S154J
R	856(UC) 868(UC)		RS1/10S0R0J
R	856(EW,EI,WG)		RS1/10S101J
R	857 858 866		RS1/10S102J
R	867(UC) 889(UC)		RS1/10S0R0J
R	883		RS1/10S204J
R	890 891 892 893		RS1/10S6R8J

CAPACITORS

Mark	Circuit Symbol & No.	Part Name	Part No.
C	351		CEA101M6R3LS
C	352 611 625 626 662 664 713 724 727 751		CKSQYB103K50
C	353 613 666		CKSYB333K25
C	354 357		CASA330M6R3
C	355 667 668 714		CKSQYB103K50
C	356		CKSYB332K50
C	359 614		CEAR47M50LS
C	360 361		CSZS010M16
C	370 703 704		CCSQCH220J50
C	371 512 615		CKSQYB102K50
C	372		CCSQCH100D50
C	373 627		CCSQCH220J50
C	451 452 617		CEA4R7M16LS
C	453 454		CEA4R7M50LS
C	455 456 602 653 708 709		CEA100M25LS
C	457 458 520 855 856 857 858		CEA101M10LS
C	459		CEA470M16LS
C	460 518 519 606		CEA220M16LS
C	461 462		CCSQCH330J50
C	501 502		CCSQCH270J50
C	503 510 511 513		CKSQYF473Z50
C	505		CCSQSL561J50
C	508(EW,EI,WG)		CSZSR68M20
C	509 517 728 729 754 758		CKSQYB103K50
C	514		CKSQYF104Z25
C	516 621		CEA4R7M16NPLL
C	521(WG)		CEA220M10LS
C	522(WG)		CEA470M16LS
C	601		CKSQYB222K50
C	603 607 612 716		CEA100M6R3LS
C	605 620 622 628 629		CKSYB473K25
C	608		CEA220M6R3NPLL
C	609 756		CKSQYB472K50
C	610 619		CCSQCH221J50
C	616		CEA220M6R3LS
C	618		CKSQYB682K50
C	623		CKSQYB272K50
C	624		CCSQCH391J50
C	651 670		CKSYF224Z25
C	652 470μF/16V		CCH-114

http://www.manualscenter.com

Mark	Circuit Symbol & No.	Part Name	Part No.
C	654 658		CCSQCH221J50
C	656		CEA100M16LS
C	661 663		CEA010M50NPLL
C	665 678 852		CKSYB473K25
C	671 672		CSZSR68M20
C	674 705		CASA100M6R3
C	675 676		CEA2R2M35LS
C	677 679 680		CCSQSL681J50
C	681		CKSYB393K25
C	701 710 712 726		CASA6R8M6R3
C	702		CASA220M6R3
C	706 707		CCSQCH470J50
C	717 718		CEA470M6R3LS
C	722 723		CEA330M6R3LS
C	752 753		CCSQCH300J50
C	755		CEA101M6R3LS
C	757		CASA6R8M10
C	851(EW,EI,WG)		CKSYB473K25
C	853 854		CEA3R3M50LS
C	859		CEA220M6R3LS
C	861 862		CEA3R3M25LS

Unit Number :
Unit Name : Display Unit

MISCELLANEOUS(UC,EW)

Mark	Circuit Symbol & No.	Part Name	Part No.
**	IC 901		PD4194
**	IC 902		NJM2903M
**	Q 901		2SB822F
**	Q 902	Chip Transistor	UN5210
**	Q 903 904 905 906 907	Chip Transistor	DTC124TU
*	D 901	Chip Diode	MA141WA
*	D 902(UC) 903(UC)	Chip Diode	MA141A
*	D 902(EW) 903(EW)	Chip Diode	MA141WA
*	D 904	Chip Diode	MA141A
*	D 905	LED	LN260RCPX0
*	D 906 907	Chip Diode	MA141K
*	D 908 909	Chip LED	CL55UR/Y0R0A
*	D 910 911 912 913 914 915 916 917 918	Chip LED	CL51YCD680A
*	D 919 920 921 922 925 928 929 931 933	Chip LED	CL51YCD680A
*	D 923 924 926 927 930 932	LED	LN460YCPX
	L 901	Inductor	LAU150K
	TC 901(UC)	Trimmer	CCL1012
**	S 901 902 903 904 905 906 907 908 909 910	Switch	CSI-255
**	S 911 912 913 914 915 916 917 918 919 920	Switch	CSI-255
**	S 921 922 923 924 925	Switch	CSI-255
**	IL 901 902	Lamp,8V 60mA	CEL1089
	X 901	Crystal Resonator	CSS1023
		LCD(UC)	CWY1161
		LCD(EW)	CWY1203

MISCELLANEOUS(EI)

Mark	Circuit Symbol & No.	Part Name	Part No.
**	IC 901		PD4194
**	IC 902		NJ129O3M
**	Q 901		2SB822F
**	Q 902	Chip Transistor	UN5210
**	Q 903 904 905 906 907	Chip Transistor	DTC124TU
*	D 901 902 903	Chip Diode	MA141WA
*	D 904	Chip Diode	MA141A
*	D 905	LED	LN460RCPX0
*	D 906 907	Chip Diode	MA141K
*	D 908 909	Chip LED	CL55UR/PG0R0A
*	D 910 911 912 913 914 915 916 917 918	Chip LED	CL11PGCD680A
*	D 919 920 921 922 925 928 929 931 933	Chip LED	CL11PGCD680A
*	D 923 924 926 927 930 932	LED	LN460GCPXG
	L 901	Inductor	LAU150K
**	S 901 902 903 904 905 906 907 908 909 910	Switch	CSI-255
**	S 911 912 913 914 915 916 917 918 919 920	Switch	CSI-255
**	S 921 922 923 924 925	Switch	CSI-255
**	IL 901 902	Lamp,8V 60mA	CEL1088
	X 901	Crystal Resonator	CSS1023
		LCD	CWY1162

MISCELLANEOUS(WG)

Mark	=========	Circuit Symbol & No.	==== Part Name	Part No.
**	IC	901		PD4195
**	IC	902		NJM2903M
**	Q	901		2SB822F
**	Q	902	Chip Transistor	UN5210
**	Q	903 904 905 906 907	Chip Transistor	DTC124TU
*	D	901 902 903 904	Chip Diode	MA141A
*	D	905	LED	LN260RCPX0
*	D	906 907	Chip Diode	MA141K
*	D	908 909	Chip LED	CL55UR/Y0R0A
*	D	910 911 912 913 914 915 916 917 918	Chip LED	CL61YCD680A
*	D	919 920 921 922 925 928 929 931 933	Chip LED	CL61YCD680A
*	D	923 924 926 927 930 932	LED	LN460YCPX
	L	901	Inductor	LAU150K
**	S	901 902 903 904 905 906 907 908 909 910	Switch	CSG-255
**	S	911 912 913 914 915 916 917 918 919 920	Switch	CSG-255
**	S	921 922 923 924 925	Switch	CSG-255
**	IL	901 902	Lamp,8V 60mA	CEL1089
	X	901	Crystal Resonator	CSS1023
			LCD	CWW1203

RESISTORS(UC,EW,EI,WG)

Mark	=========	Circuit Symbol & No.	==== Part Name	Part No.
	R	901		RS1/10S223J
	R	902 907 918 919 920 921 922 925		RS1/10S222J
	R	903		RS1/10S473J
	R	904		RS1/10S221J
	R	905		RS1/10S361J
	R	906		RS1/10S123J
	R	908 924 926		RS1/8S222J
	R	909		RS1/10S222J
	R	910 911 912 913 914 942		RS1/10S204J
	R	915 916 917		RS1/10S104J
	R	927 928 929 930		RS1/10S181J
	R	931 932		RS1/8S331J
	R	933 934		RS1/8S241J
	R	935 936 938 939		RS1/10S331J
	R	937 940		RS1/10S471J
	R	941		RS1/10S391J
	R	943 944		RS1/10S121J

CAPACITORS(UC,EW,EI,WG)

Mark	=========	Circuit Symbol & No.	==== Part Name	Part No.
	C	901		CKSQYF104Z25
	C	902 905 908		CKSYF334Z25
	C	903(EW,EI,WG)		CCSQCH080D50
	C	904		CCSQCH040C50
	C	906 907		CKSQYB103K50

Unit Number :
Unit Name : Mechanism P.C.Board

Mark	=========	Circuit Symbol & No.	==== Part Name	Part No.
**	Q	831	Photo Transistor(DISC SENSE)	PH102K
*	D	831	LED(DISC SENSE)	SLH-34VC3F
**	M	833	Motor Unit(LOADING)	CXA2129
**	S	832	Switch(DISC SET)	CSN1009

Unit Number :
Unit Name : Carriage P.C.Board

Mark	=========	Circuit Symbol & No.	==== Part Name	Part No.
**	M	831	Motor Unit(SPINDLE)	CXM1033
**	M	832	Motor Unit(CARRIAGE)	CXA2133
**	S	831	Switch(HOME)	CSN-094

Miscellaneous Parts List

Mark	=========	Circuit Symbol & No.	==== Part Name	Part No.
			PU Unit	CGY1007

• ICs and Transistors

2SD1226MF

• FM Unit

IC1(DEH-55/UC) : CWW1116

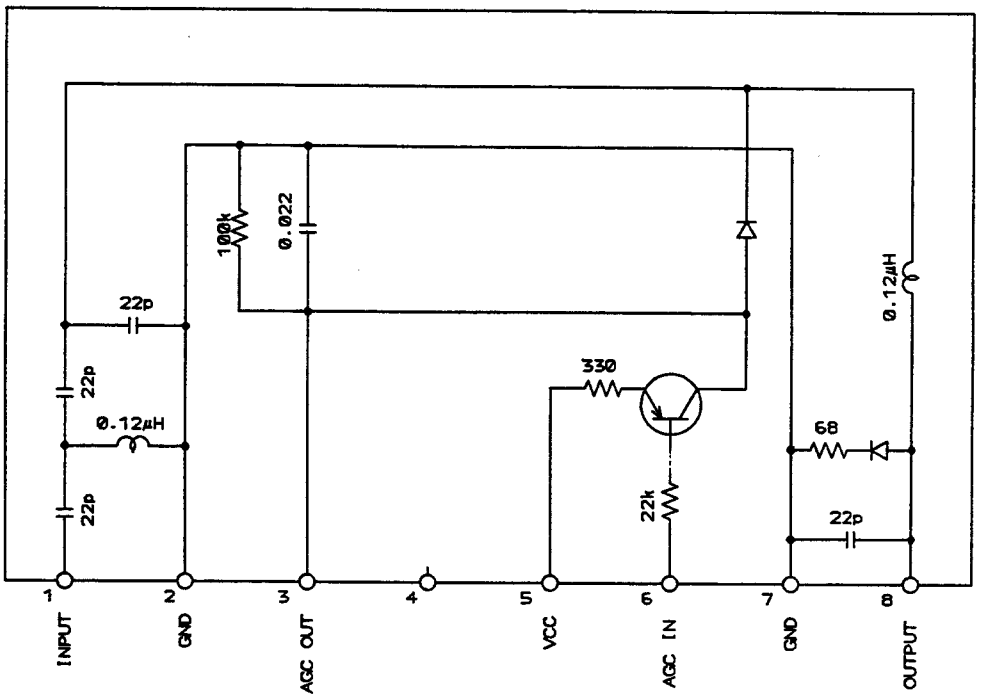

http://www.manualscenter.com

3. SCHEMATIC CIRCUIT DIAGRAM (TUNER DEH-55/EW, EI)

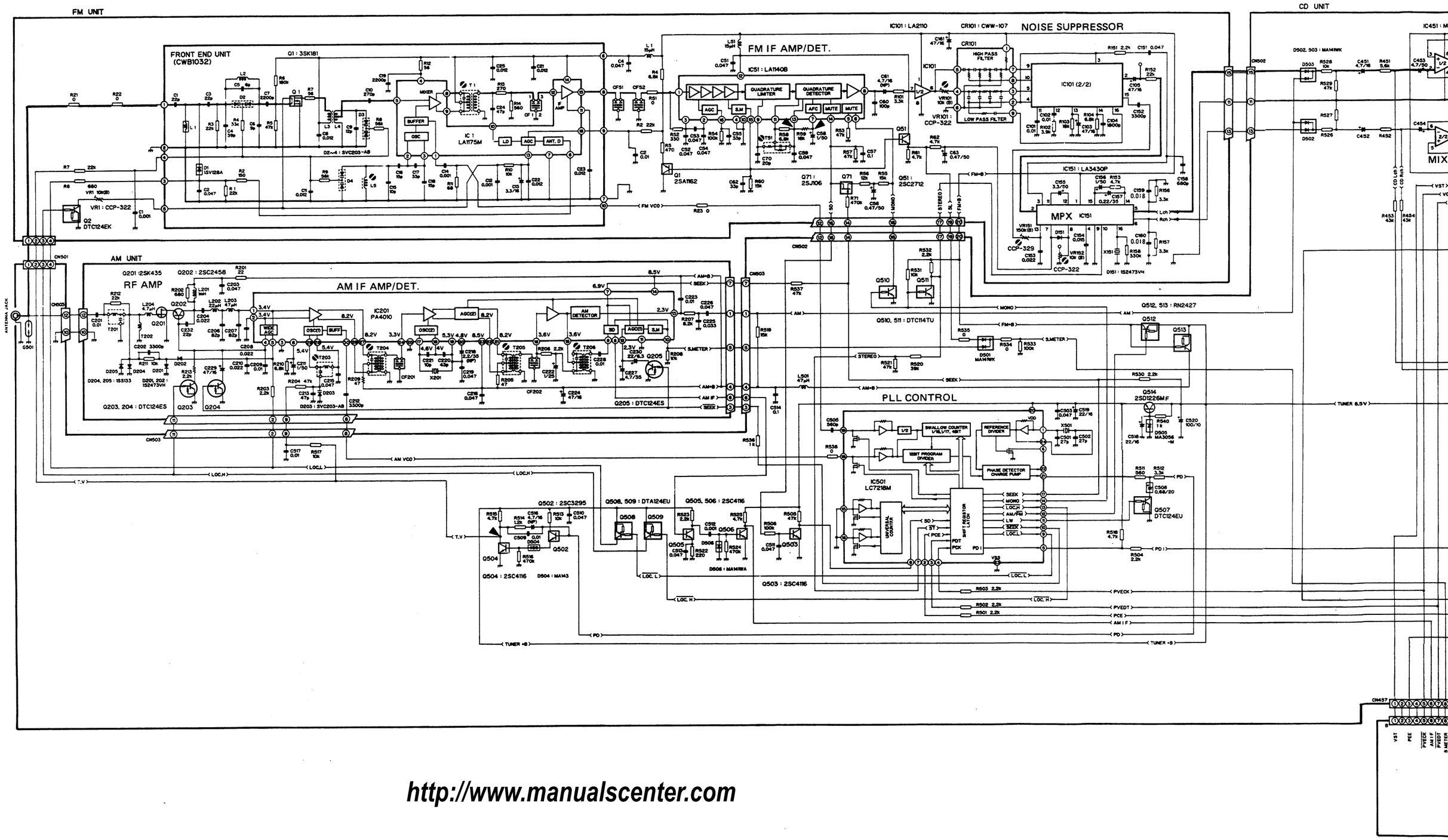

http://www.manualscenter.com

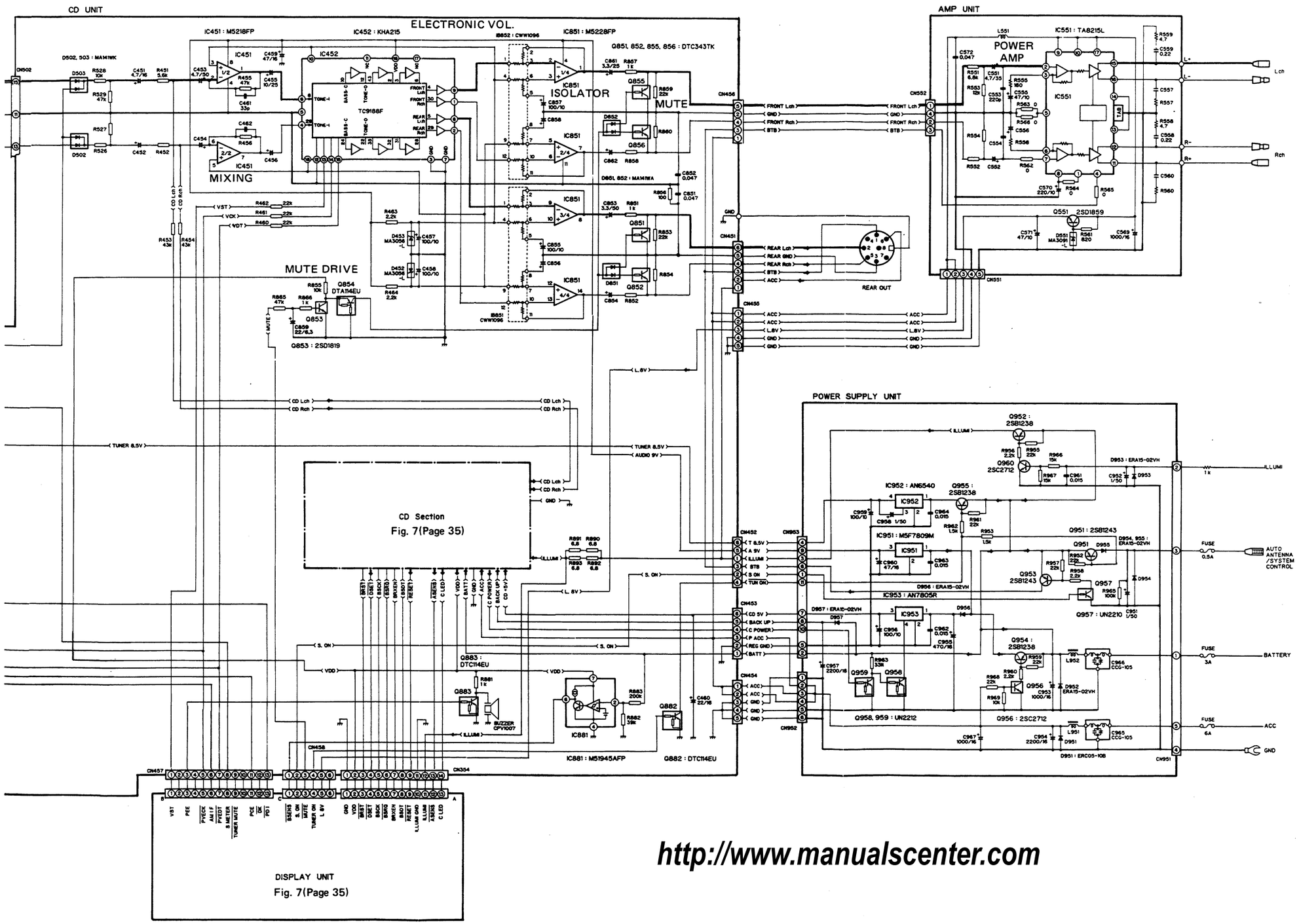

http://www.manualscenter.com

NOTE :

- Indicates a chip resistor.
- Indicates a chip capacitor.
- Indicates a chip transistor.

Fig. 1

4. CONNECTION DIAGRAM (TUNER DEH-55/EW, EI)

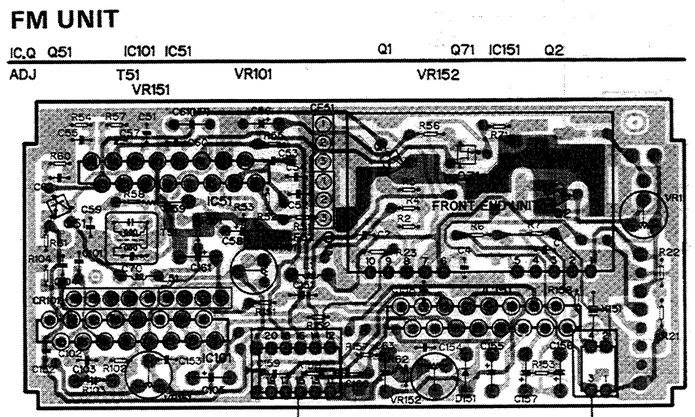

AM UNIT : IC201

1	2	3	4	5	6	7	8	9	10
3.4V	3.4V	0V				6.9V			
11	12	13	14	15	16	17	18	19	20
0V	2.3V	2.3V	8.5V	3.6V	3.6V	4.6V	4.0V	5.3V	4.8V
21	22	23	24	25	26	27	28	29	30
8.2V	8.2V	8.5V	3.3V	0V	8.2V	8.2V	5.4V	5.4V	

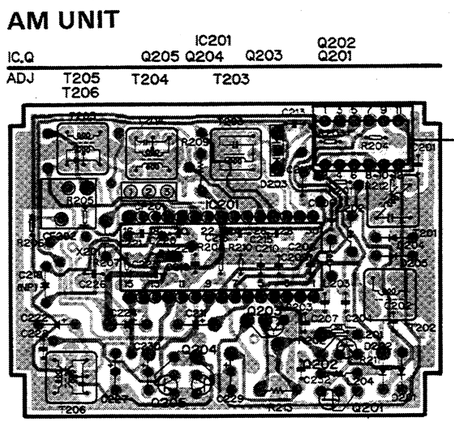

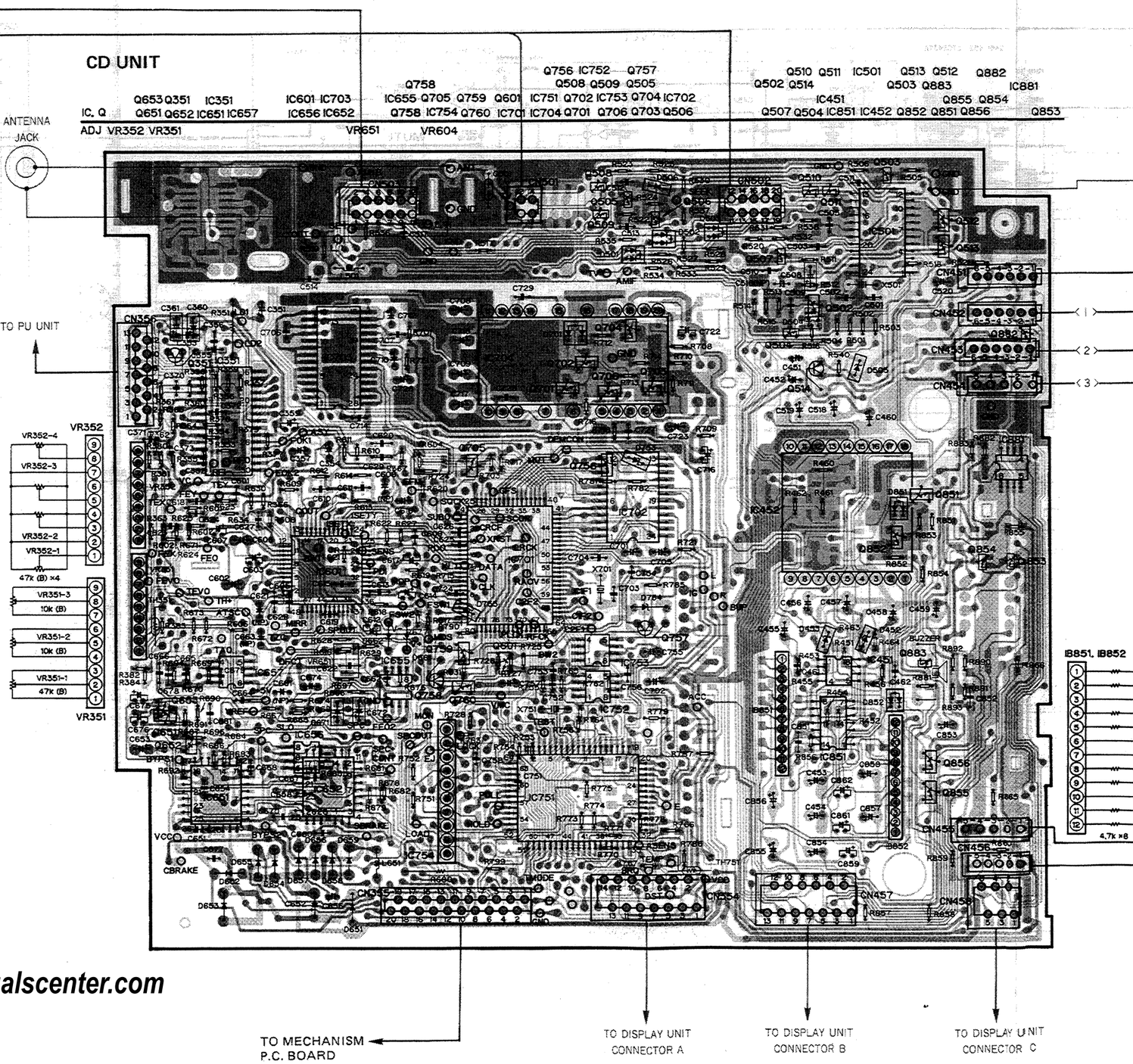

http://www.manualscenter.com

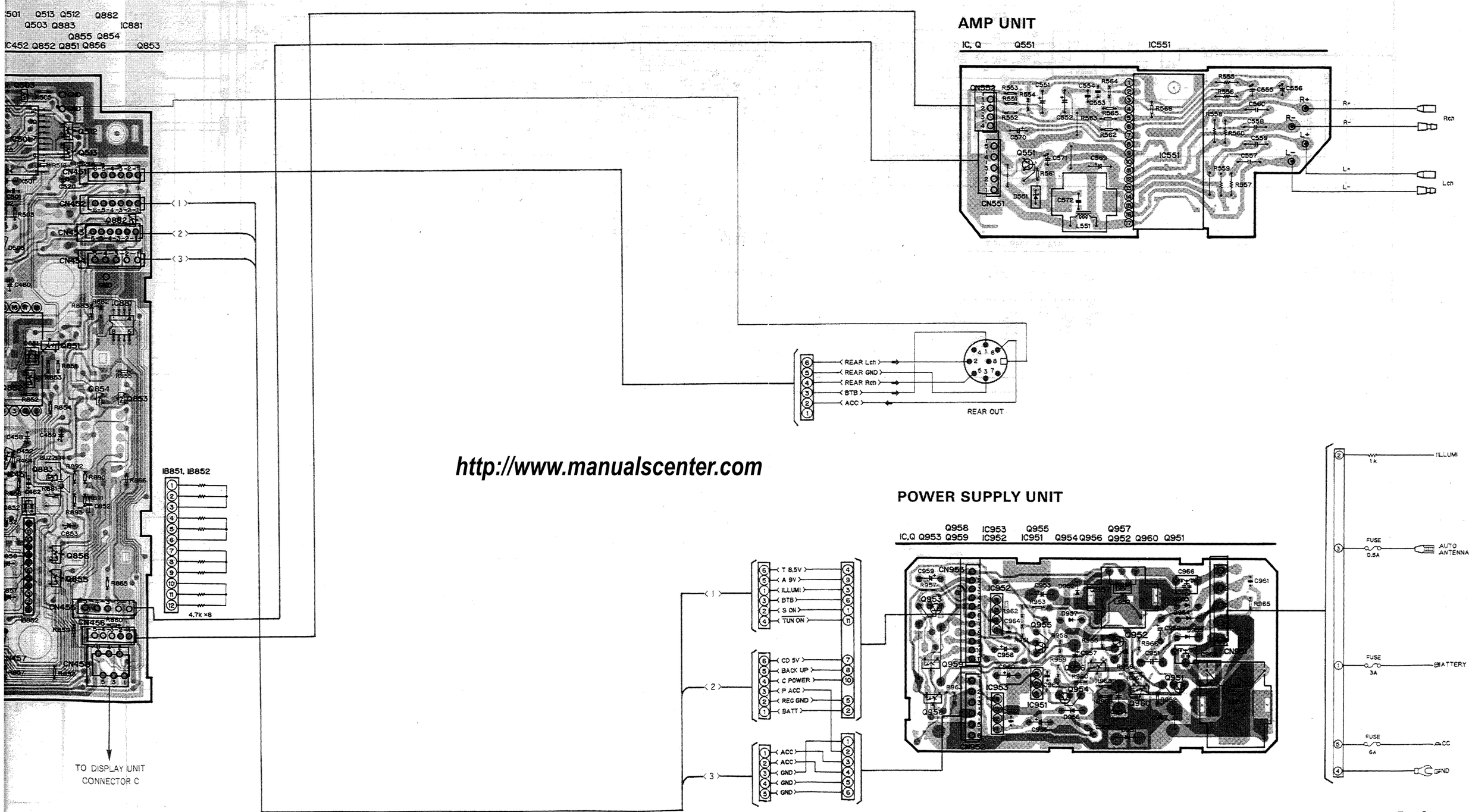

http://www.manualscenter.com

Fig. 2

5. SCHEMATIC CIRCUIT DIAGRAM (TUNER DEH-55SDK/WG)

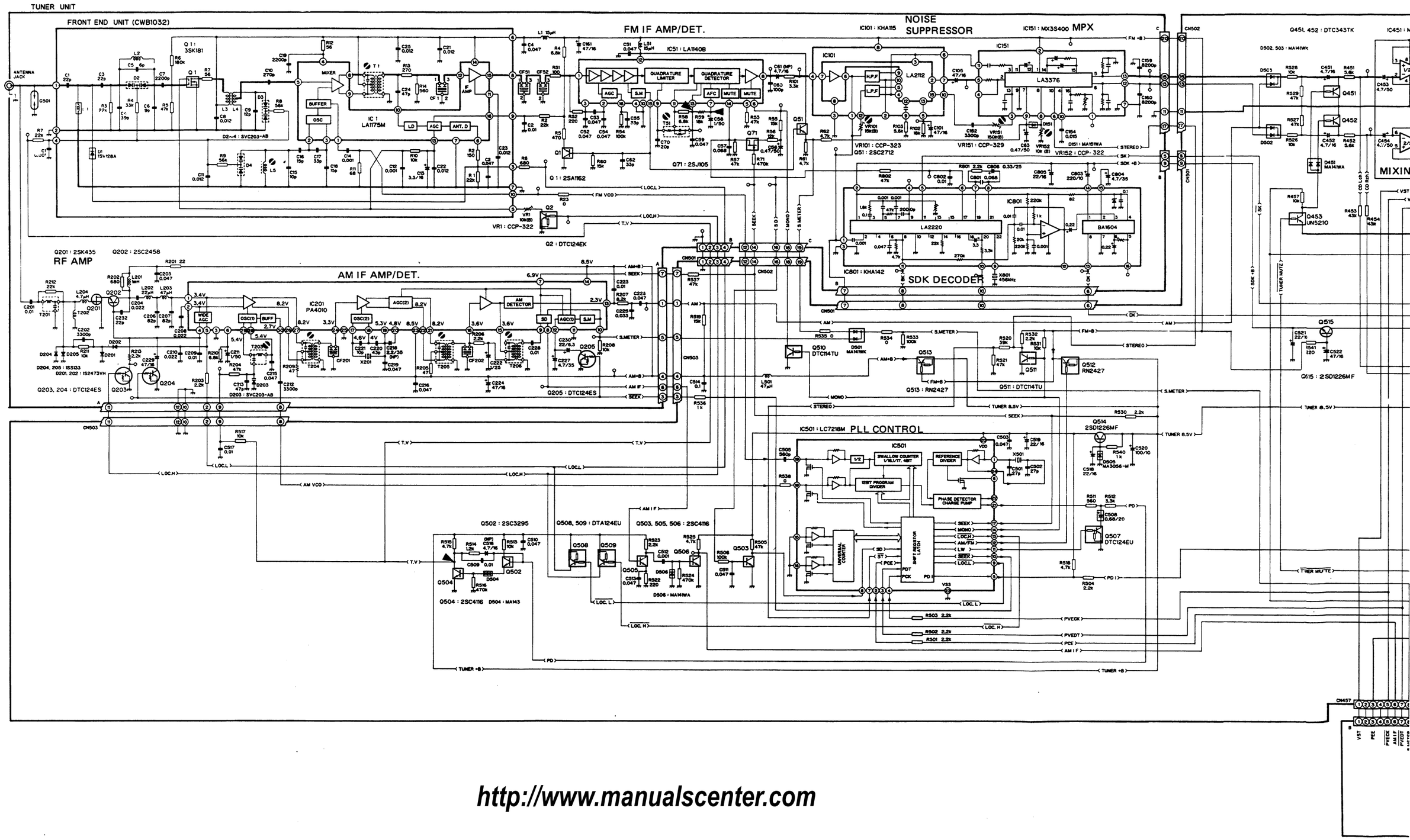

http://www.manualscenter.com

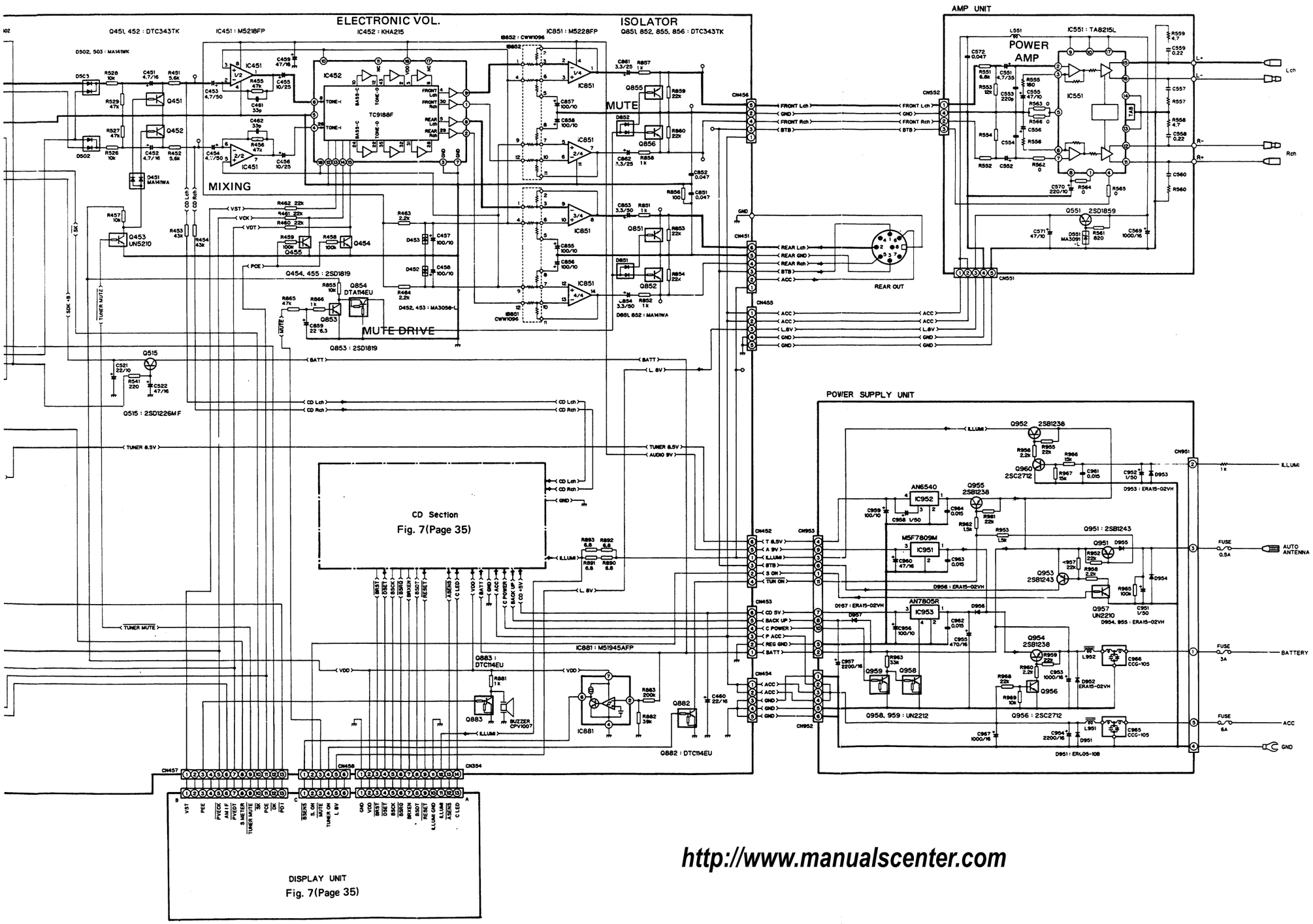

http://www.manualscenter.com

NOTE :
- Indicates a chip resistor.
- Indicates a chip capacitor.
- Indicates a chip transistor.

Fig. 3

7. SCHEMATIC CIRCUIT DIAGRAM (TUNER DEH-55/UC)

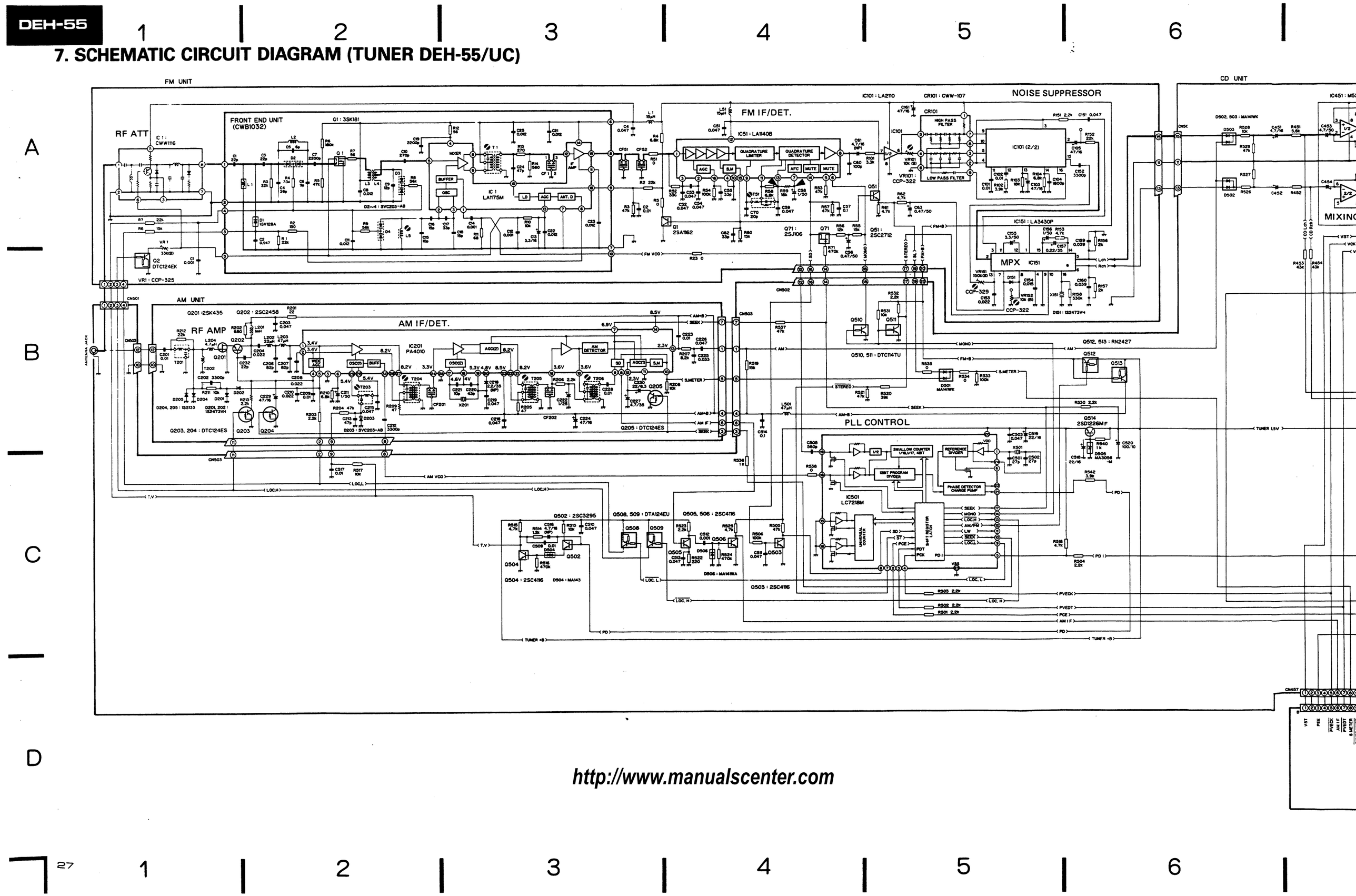

http://www.manualscenter.com

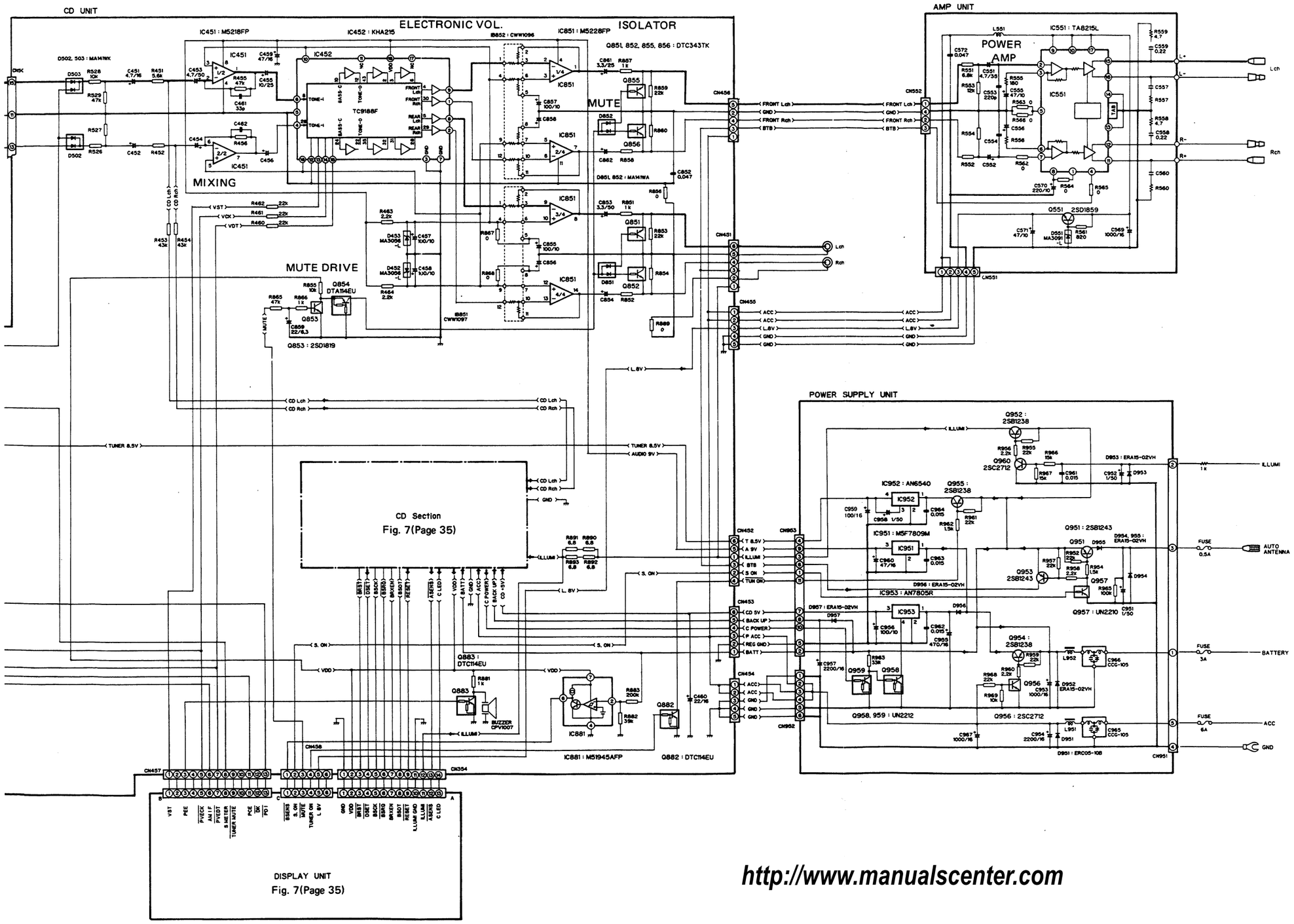

http://www.manualscenter.com

Fig. 5

8. CONNECTION DIAGRAM (TUNER DEH-55/UC)

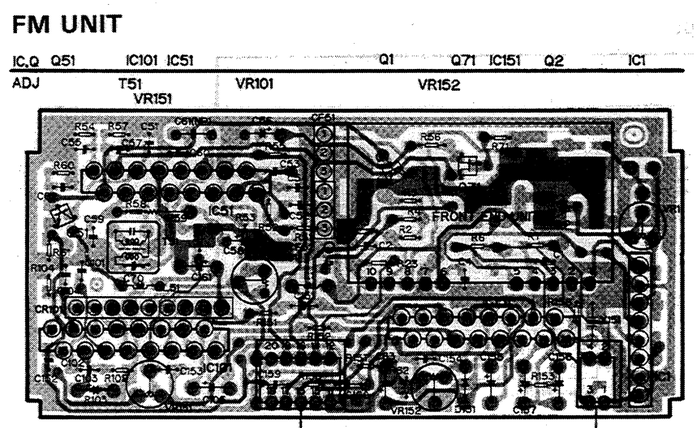

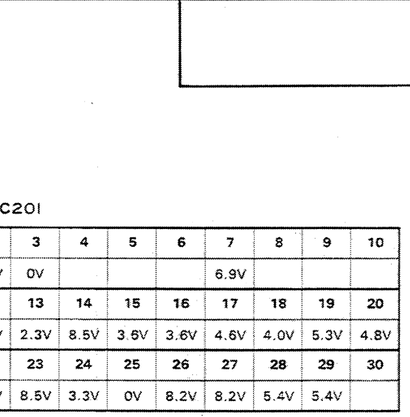

AM UNIT : IC201

1	2	3	4	5	6	7	8	9	10
3.4V	3.4V	0V				6.9V			
11	12	13	14	15	16	17	18	19	20
0V	2.3V	2.3V	8.5V	3.6V	3.6V	4.6V	4.0V	5.3V	4.8V
21	22	23	24	25	26	27	28	29	30
2.2V	8.2V	8.5V	3.3V	0V	8.2V	8.2V	5.4V	5.4V	

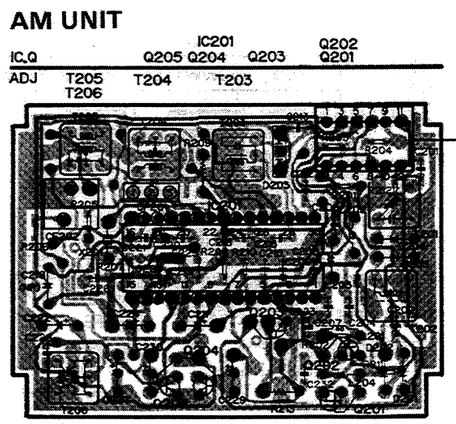

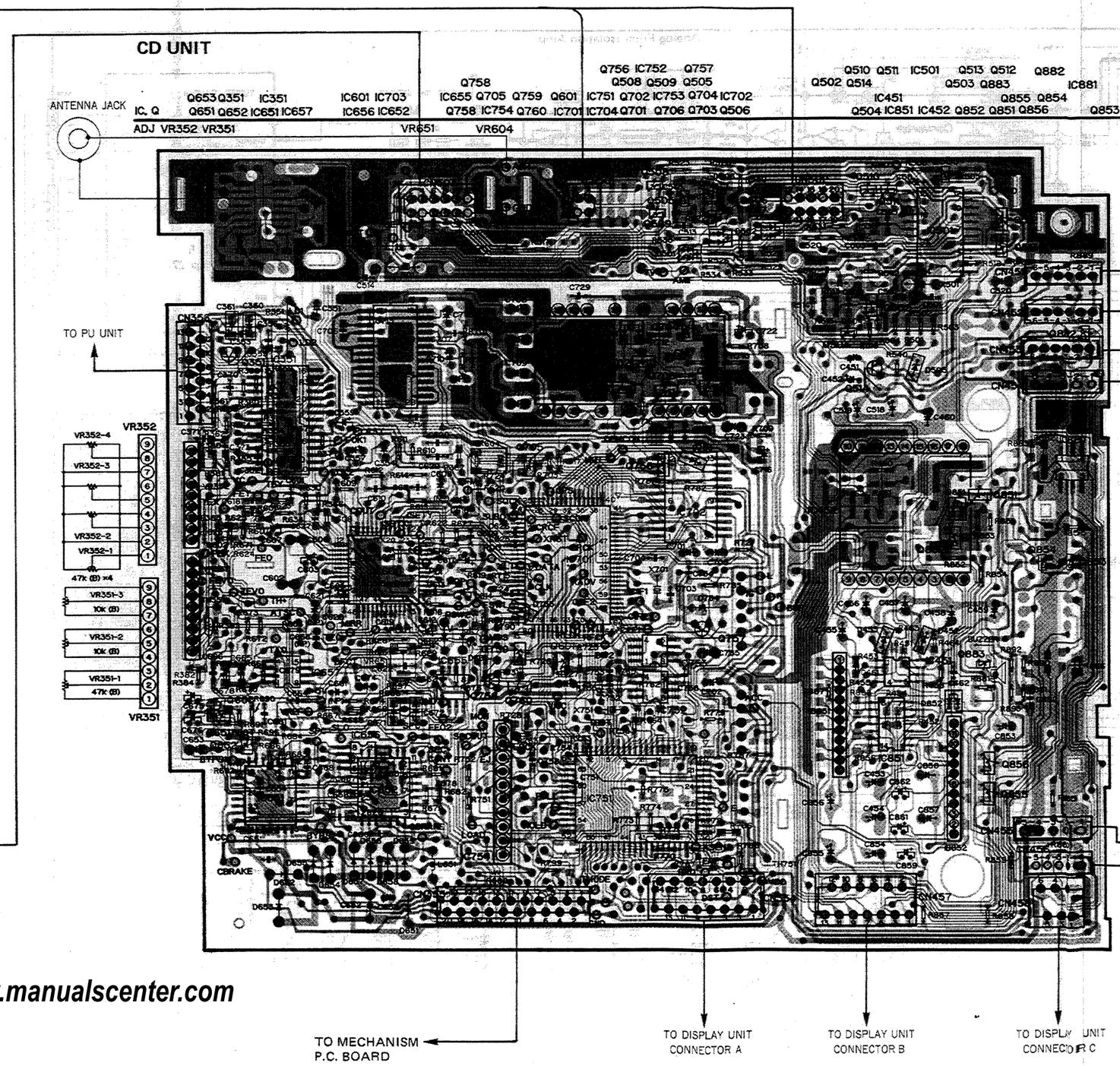

http://www.manualscenter.com

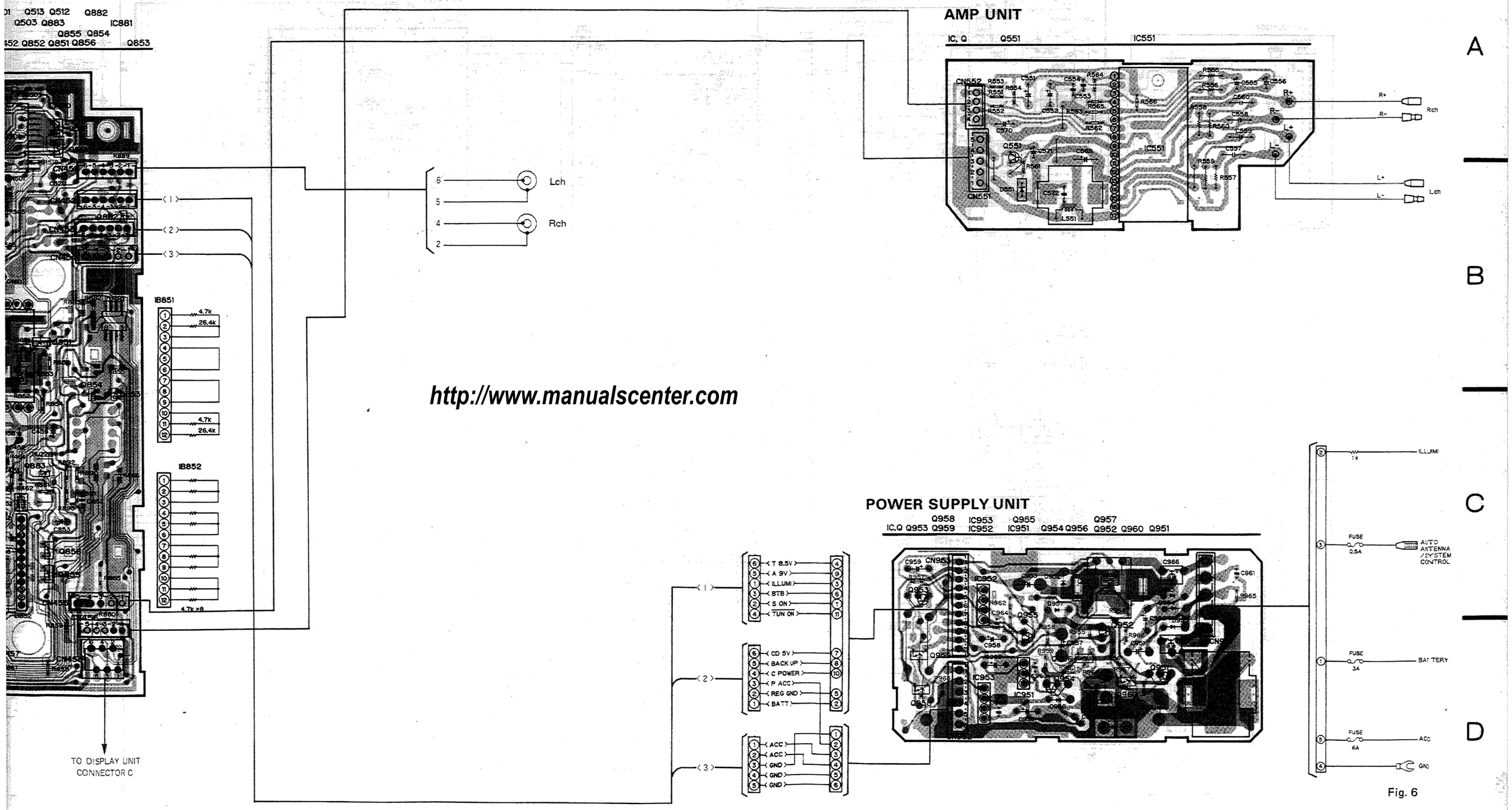

Fig. 6

http://www.manualscenter.com

6. CONNECTION DIAGRAM (TUNER DEH-55SDK/WG)

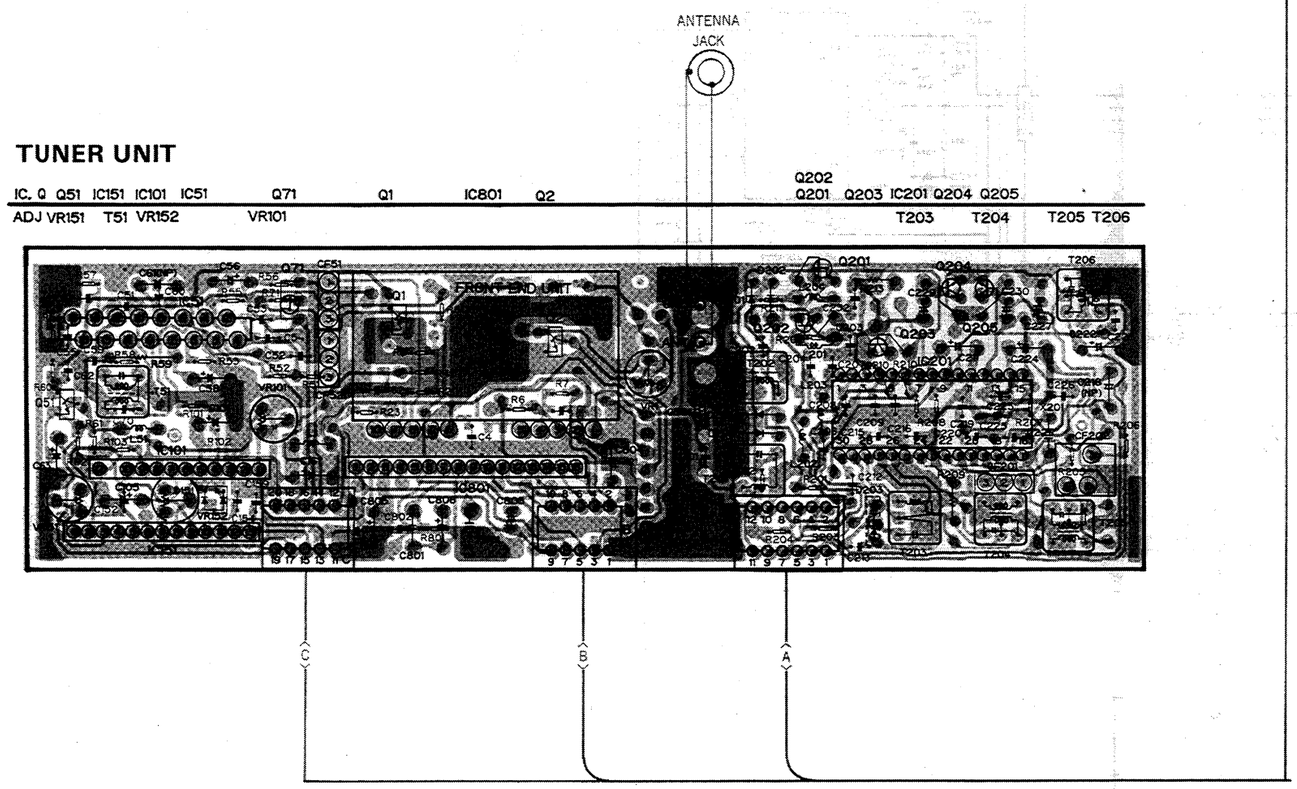

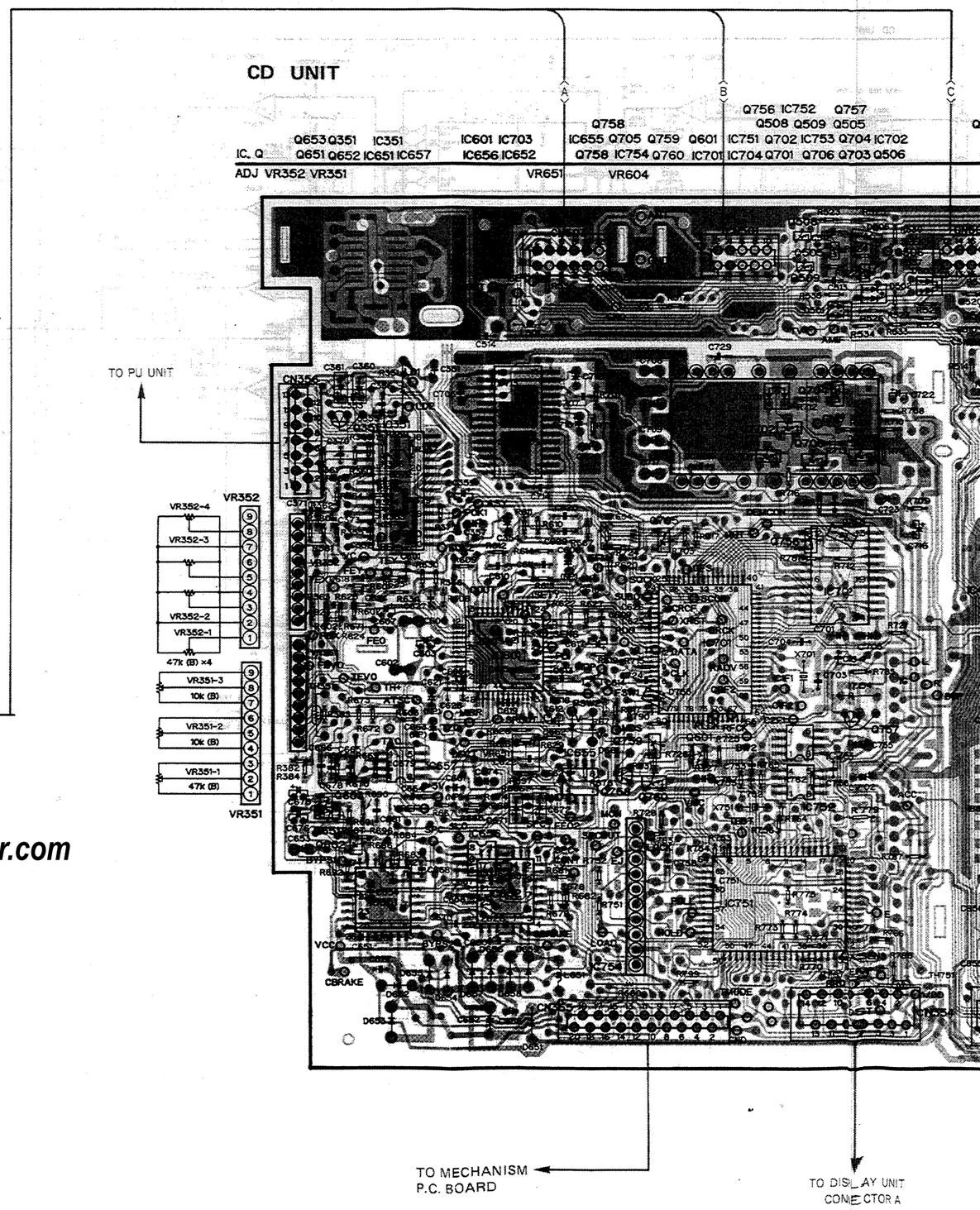

http://www.manualscenter.com

TUNER UNIT : IC201

1	2	3	4	5	6	7	8	9	10
3.4V	3.4V	0V				6.9V			
11	12	13	14	15	16	17	18	19	20
0V	2.3V	2.3V	8.5V	3.6V	3.6V	4.6V	4.0V	5.3V	4.8V
21	22	23	24	25	26	27	28	29	30
8.2V	8.2V	8.5V	3.3V	0V	8.2V	8.2V	5.4V	5.4V	2.7V

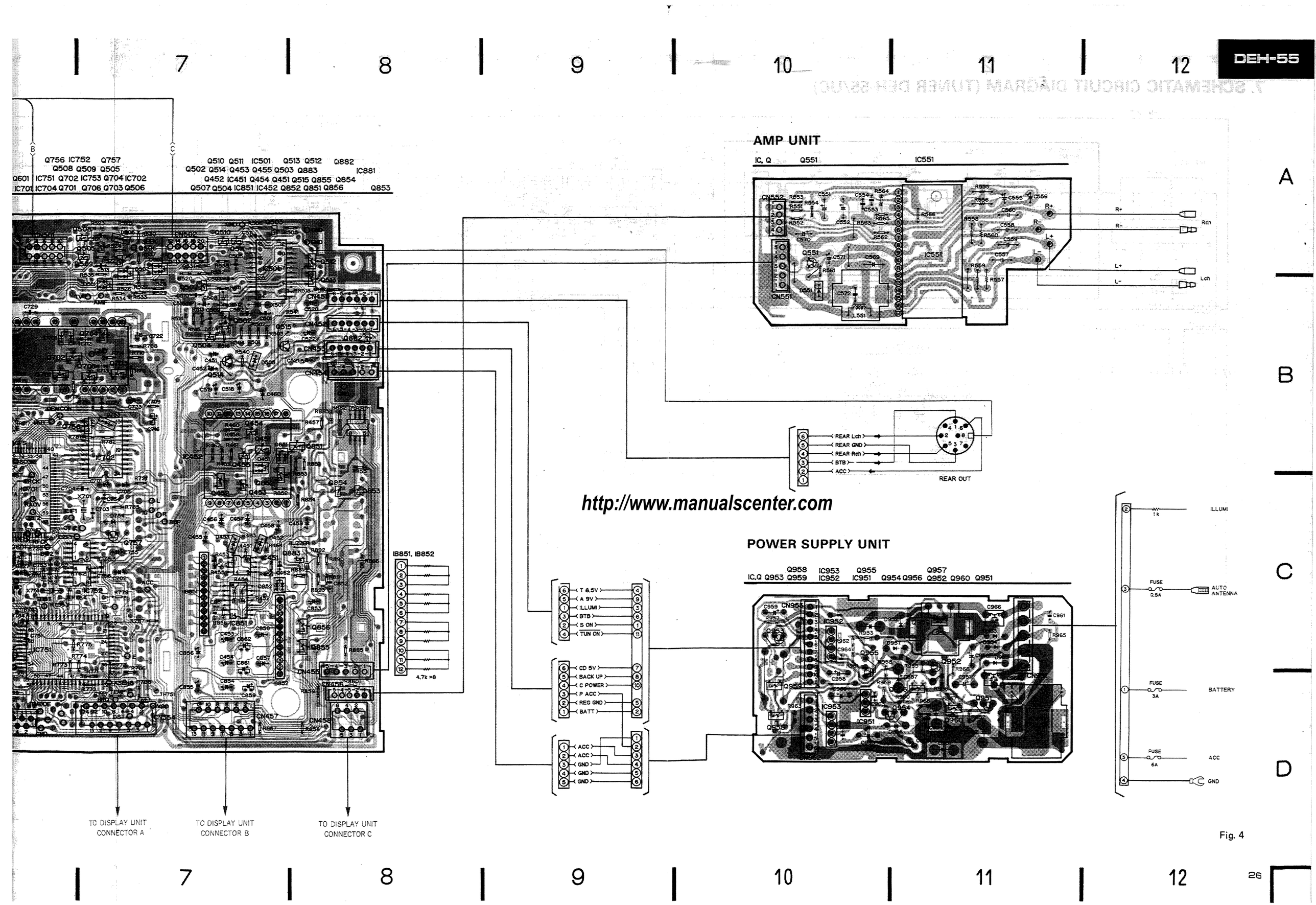

http://www.manualscenter.com

Fig. 4

http://www.manualscenter.com

9. SCHEMATIC CIRCUIT DIAGRAM (CD MECHANISM)

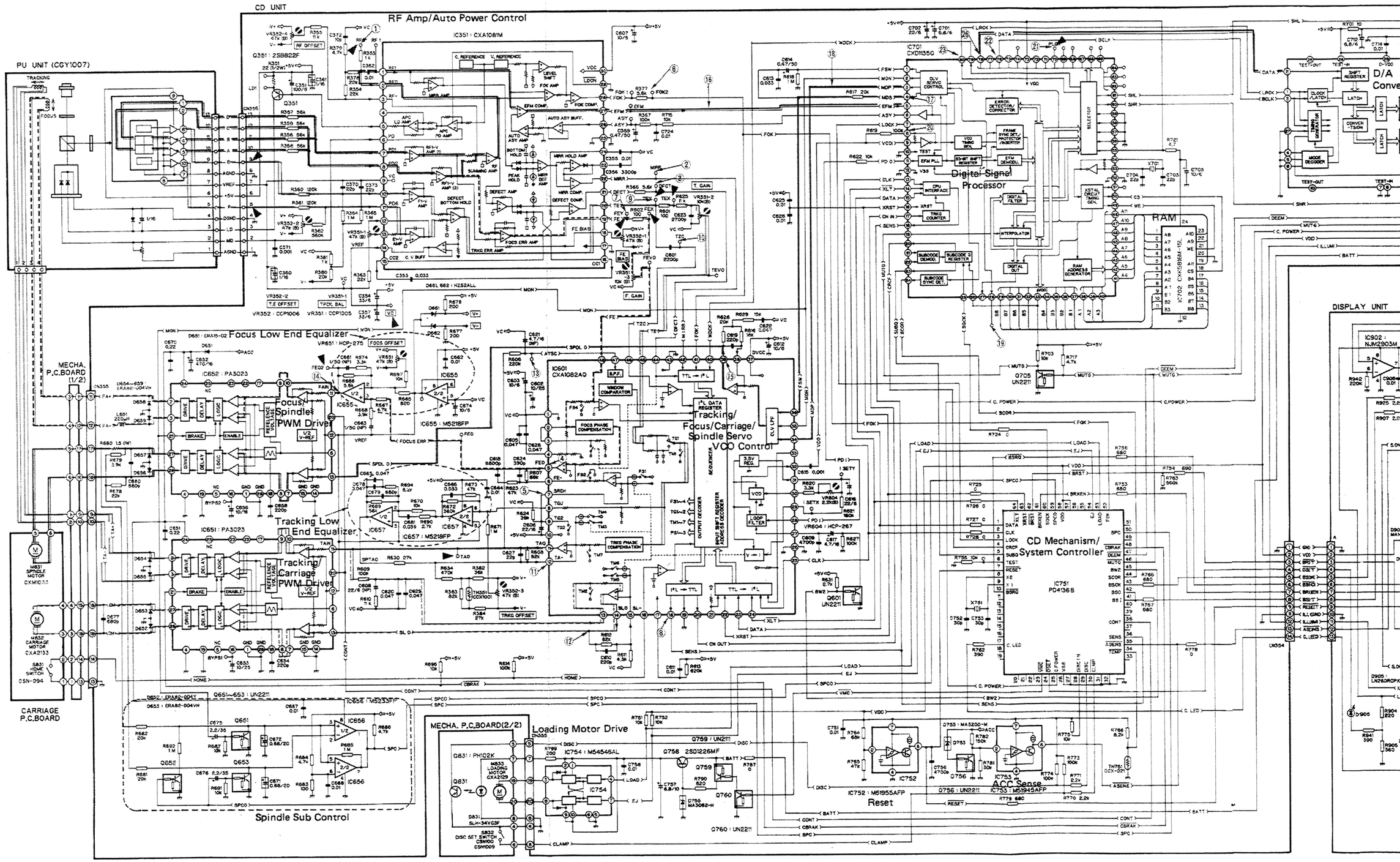

http://www.manualscenter.com

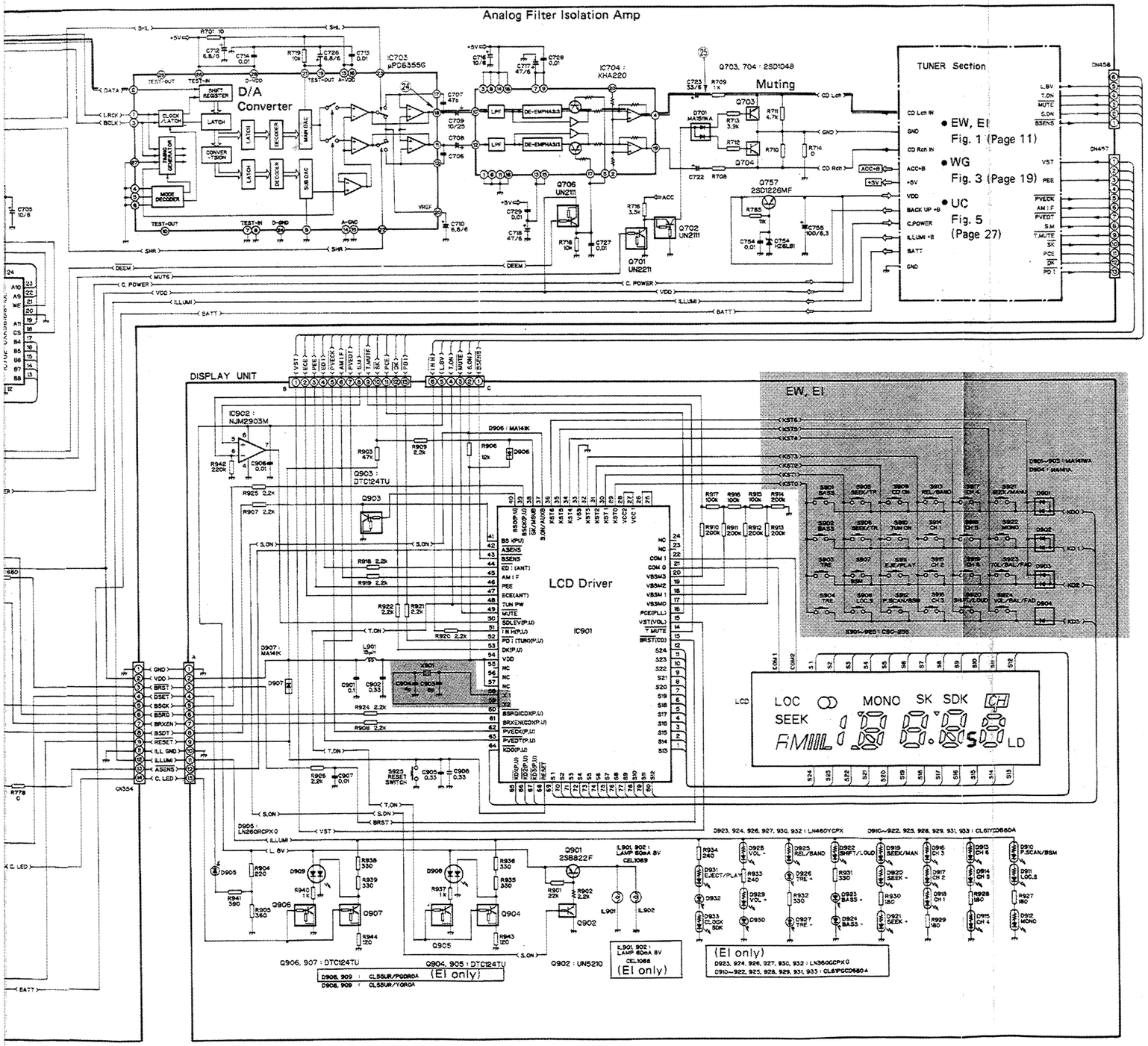

UC

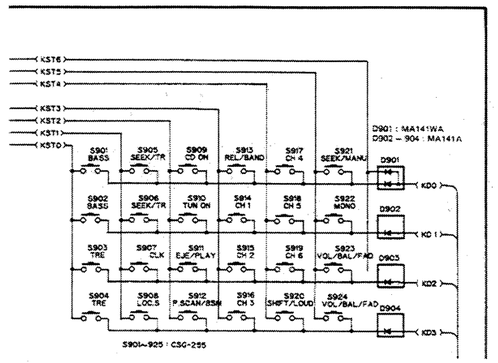

WG

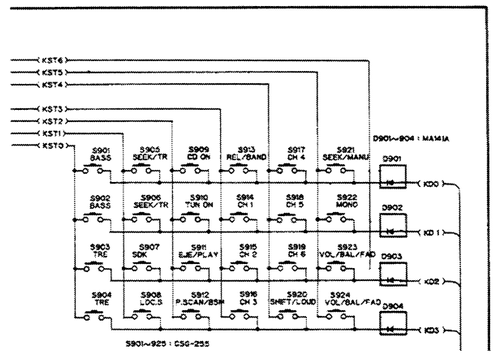

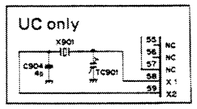

	UC	WG	EW	EI
LCD	CWW1161	CWW1203	CWW1203	CWW1162
IC901	PD4194	PD4195	PD4194	PD4194

Signal Route
Focus Servo Line
Spindle Servo Line
Tracking Servo Line
Carriage Servo Line

NOTE :
Indicates a chip resistor.
Indicates a chip capacitor.
Indicates a chip transistor.
Indicates a chip diode.

SWITCHES

S831 : HOME SWITCH ····· ON —— OFF
S832 : DISC SET SWITCH ····· ON —— OFF
The undertined indicates the switch position.

Fig. 7

10. CONNECTION DIAGRAM (CD MECHANISM)

http://www.manualscenter.com

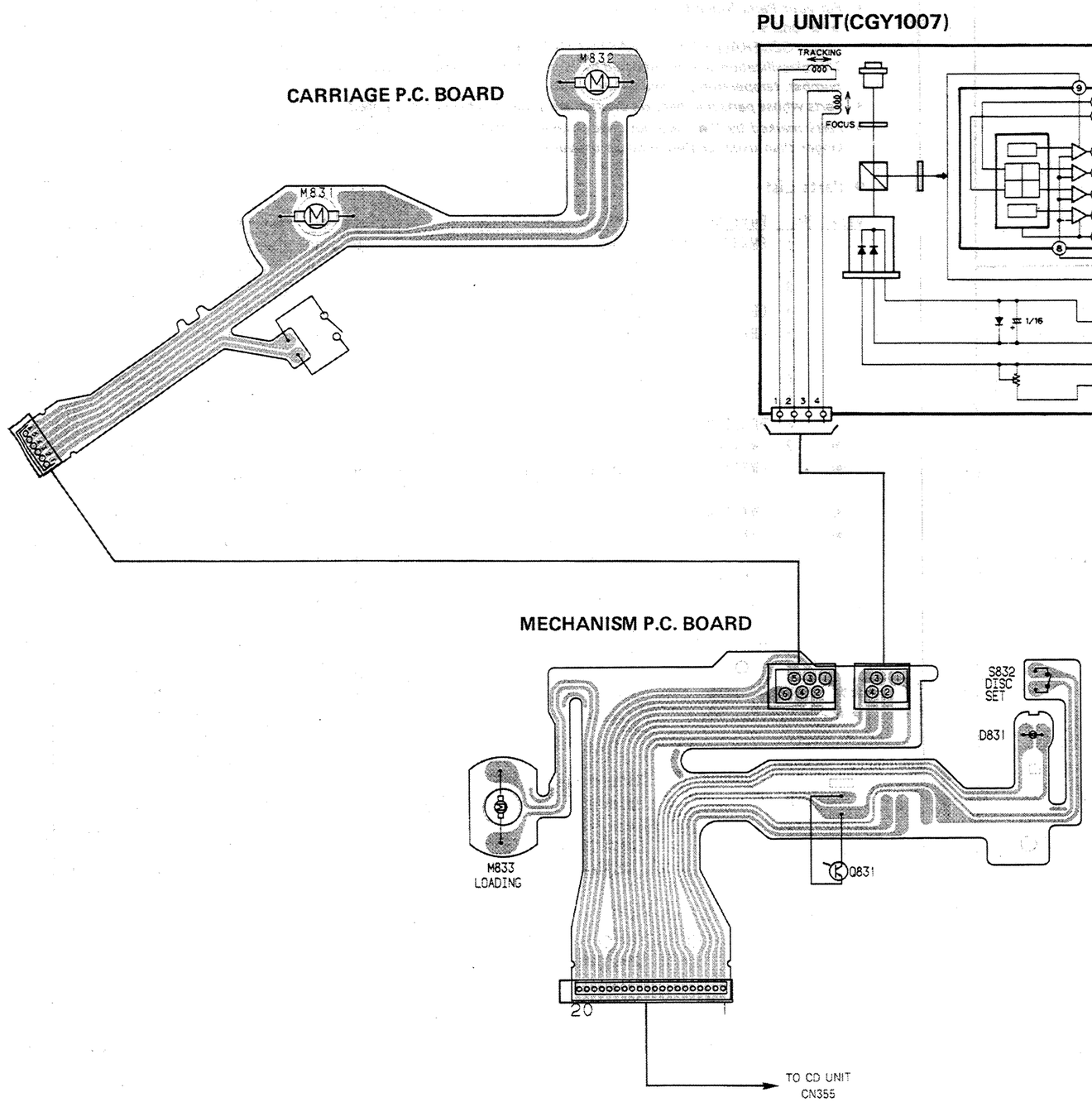

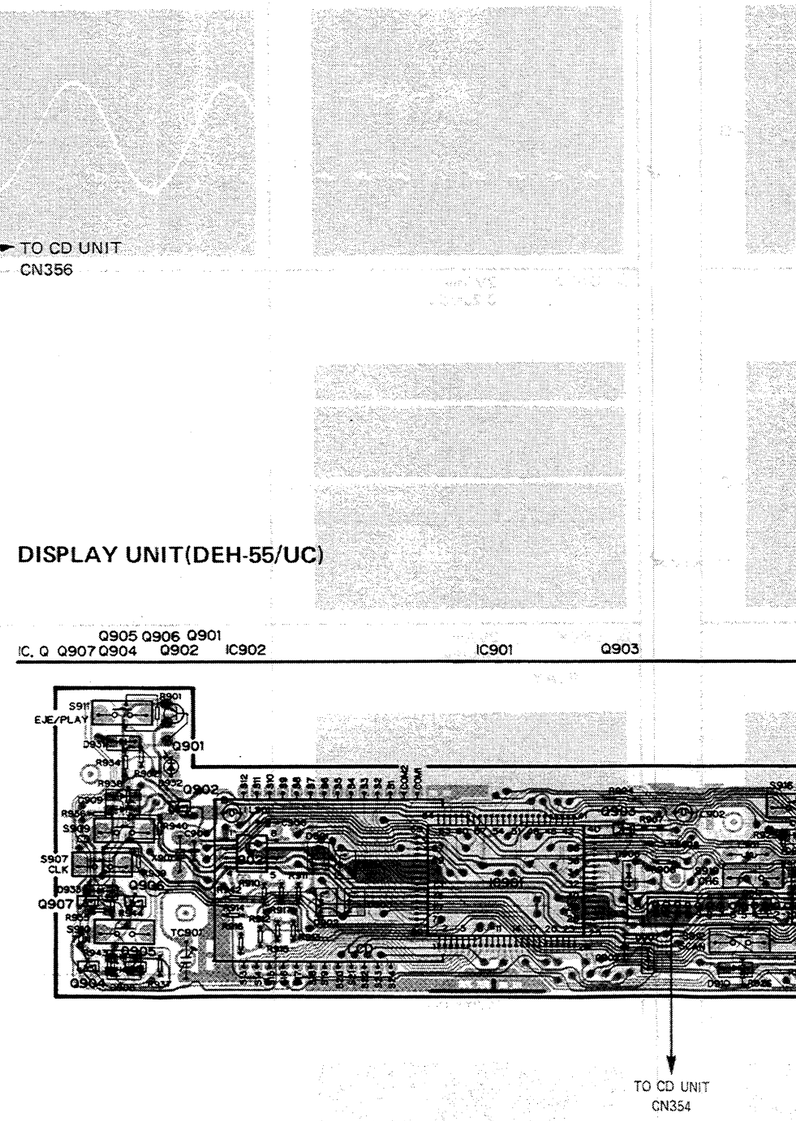

DISPLAY UNIT(DEH-55SDK/WG)

http://www.manualscenter.com

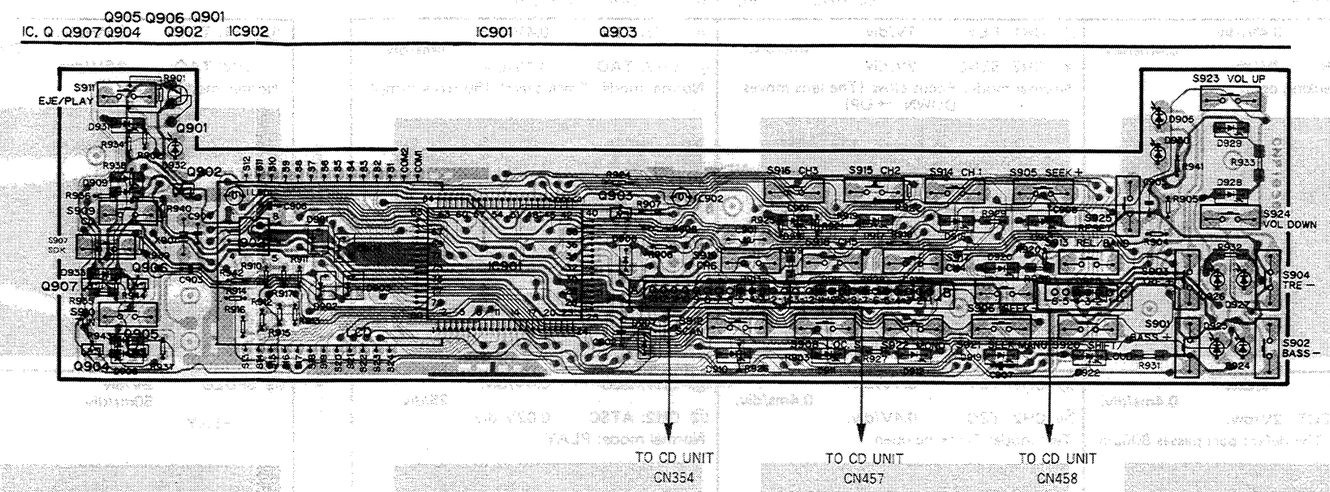

A

B

DISPLAY UNIT(DEH-55/EW, EI)

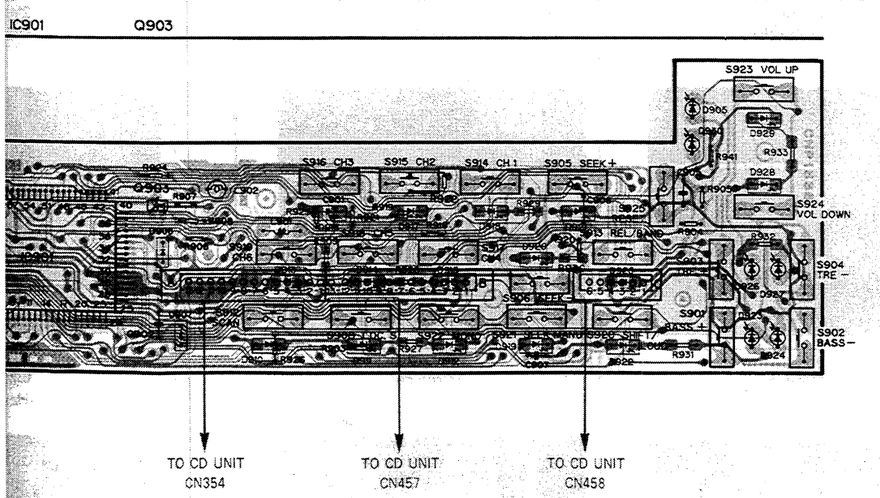

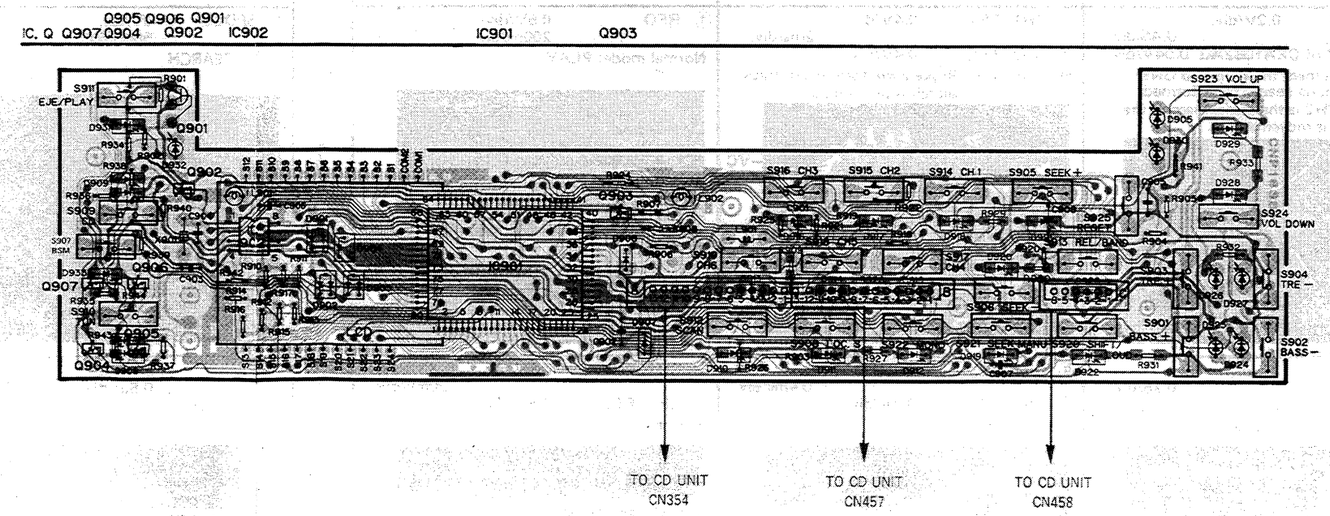

C

D

Fig. 8

http://www.manualscenter.com

Note: 1. The encircled numbers denote measuring points in the circuit diagram.
2. Reference voltage.
G: GND VC: Pin 14 of CXA1081M (2.5V)

• Wave Forms

① CH1: RFO 0.4V/div.
② CH2: MIRR 2V/div.
0.4ms/div.
Test mode: Tracking open

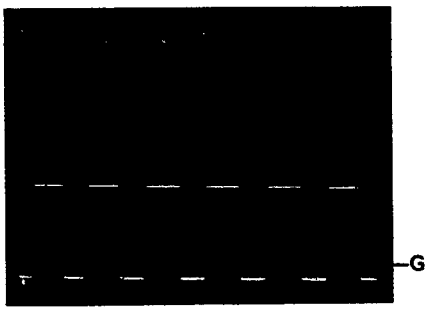

⑦ CH1: FEY 1V/div.
⑧ CH2: SENS 2V/div.
4ms/div.
Normal mode: Focus close (The lens moves DOWN → UP)

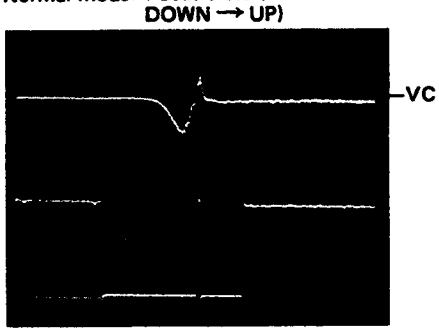

⑨ CH1: TEY 0.4V/div.
⑪ CH2: TAO 0.4V/div.
4ms/div.
Normal mode: Track search (80 track jump)

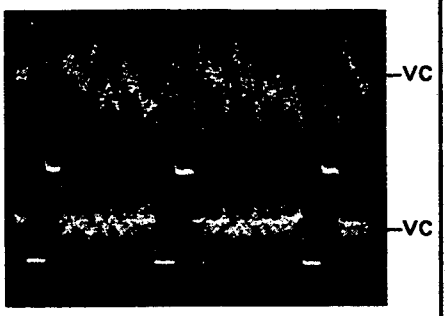

① CH1: RFO 1V/div.
③ CH2: DEFECT 2V/div.
0.4ms/div.
Normal mode: The defect part passes 800μm.

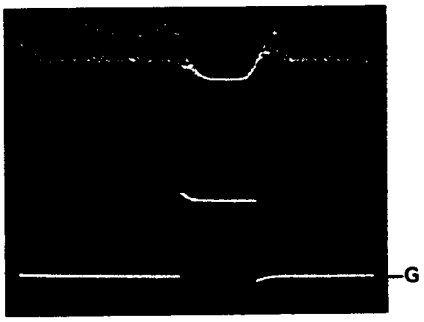

⑨ CH1: TEY 0.4V/div.
⑩ CH2: TZC 0.4V/div.
0.4ms/div.
Test mode: Tracking open

⑫ CH1: SLO 0.4V/div.
⑬ CH2: ATSC 0.02V/div.
2S/div.
Normal mode: PLAY

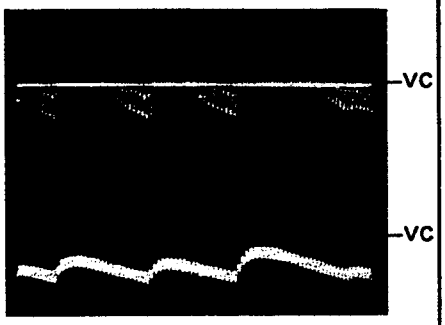

④ CH1: FEO 0.2V/div.
⑤ CH2: Pin 7 of CXA1082AQ 0.04V/div.
0.4S/div.
Test mode: Connect the FOK2 to GND. Focus search is performed. (CH2 is the same phase as the lens movement.)

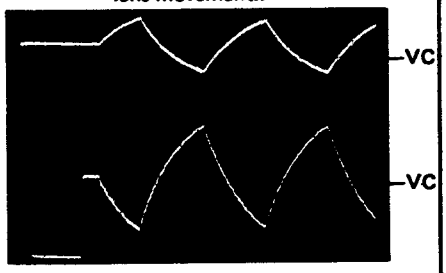

⑨ CH1: TEY 0.4V/div.
⑪ CH2: TAO 0.4V/div.
2ms/div.
Normal mode: Brake wave form when track search is performed.

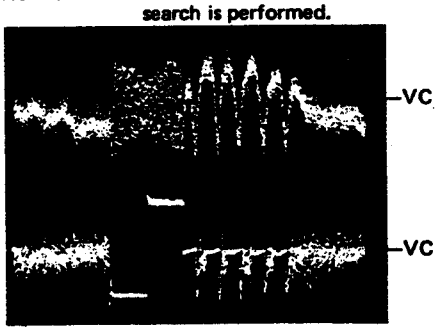

① RFO 0.5V/div.
200ns/div.
Normal mode: PLAY

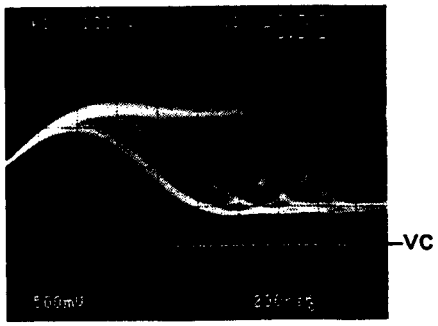

⑥ CH1: FOK2 2V/div.
④ CH2: FEO 0.2V/div.
0.2S/div.
Normal mode: Focus close

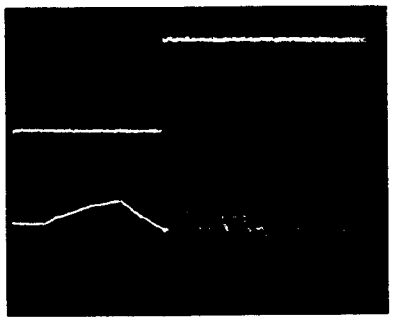

⑨ CH1: TEY 0.4V/div.
⑪ CH2: TAO 0.4V/div.
0.4ms/div.
Test mode: Single jump

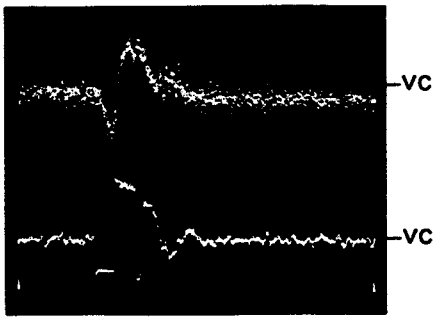

⑦ CH1: FEY 0.5V/div.
⑭ CH2: FEO2 0.5V/div.
20ms/div.
Normal mode: PLAY

⑨ CH1: TEY 0.5V/div.
⑪ CH2: TAO 0.5V/div.
20ms/div.
Normal mode: PLAY

⑰ MDS 2V/div. 50μs/div.
PLAY

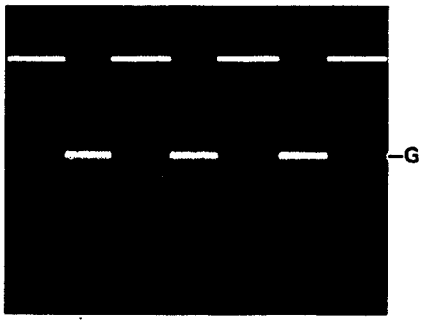

⑲ GFS 2V/div. 200μs/div.
PLAY

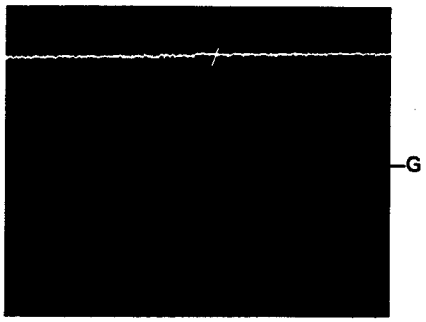

⑮ SPDLO 2V/div. 50ms/div.
PLAY

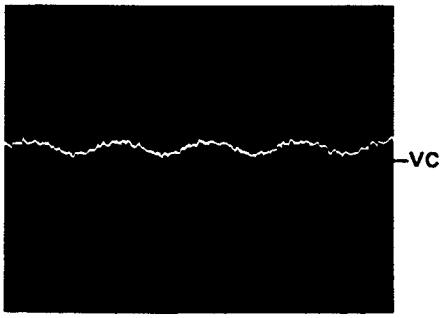

⑰ MDS 2V/div. 50μs/div.
SEARCH

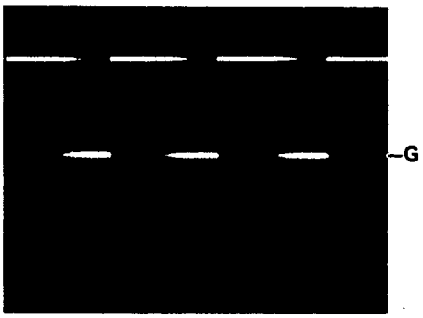

⑲ GFS 2V/div. 20ms/div.
SEARCH

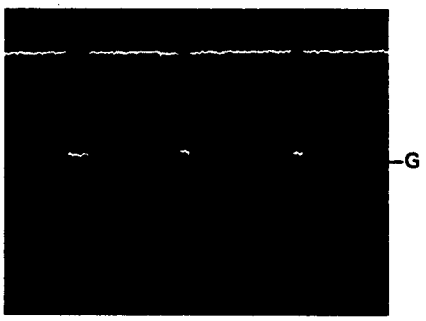

⑮ SPDLO 2V/div. 50ms/div.
SEARCH

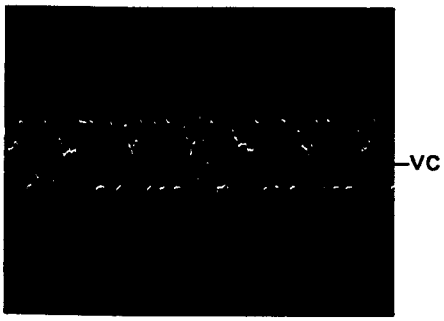

⑱ MDP 2V/div. 200μs/div.
PLAY

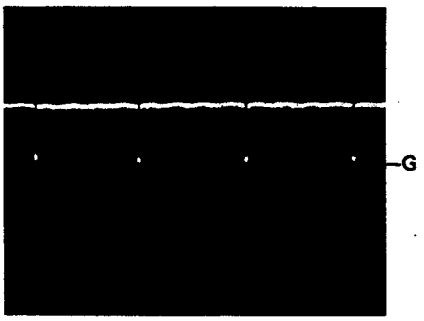

⑳ VCOO 2V/div. 0.2μs/div.
PLAY

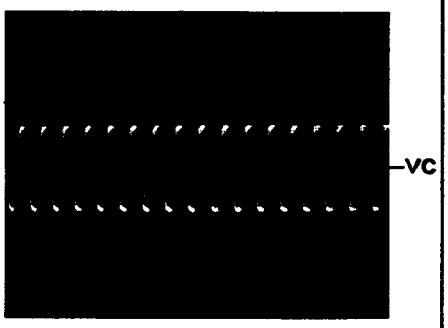

⑯ EFM 2V/div. 0.5μs/div.
PLAY

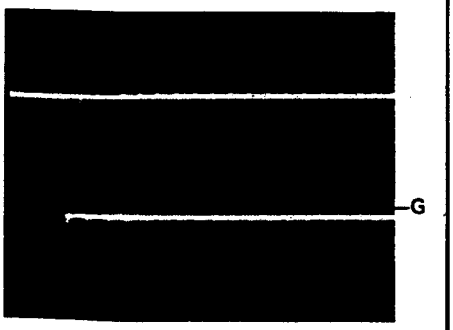

⑱ MDP 2V/div. 10ms/div.
SEARCH

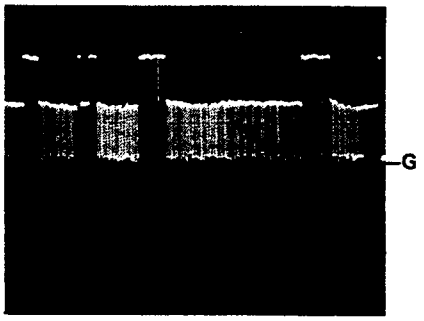

㉑ PLCK 2V/div. 0.2μs/div.
PLAY

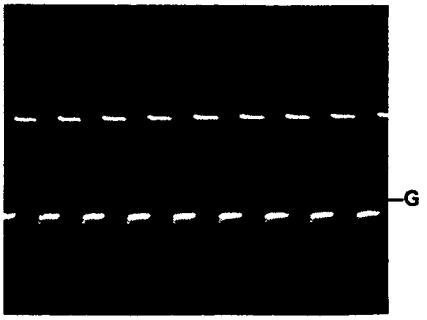

http://www.manualscenter.com

㉒ BCLK 2V/div. 0.2μs/div. 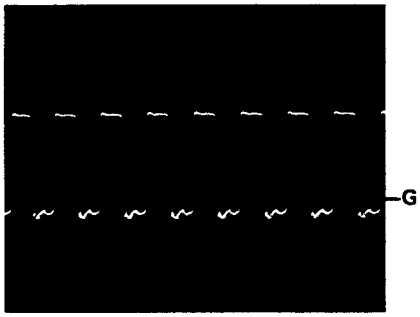 	㉕ L or R L.P.F. 0.5V/div. 0.2ms/div. PLAY (1kHz: FS) 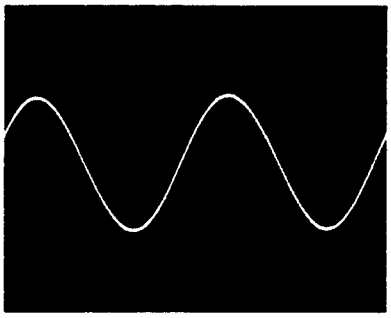	
㉖ DATA 2V/div. 0.2μs/div. 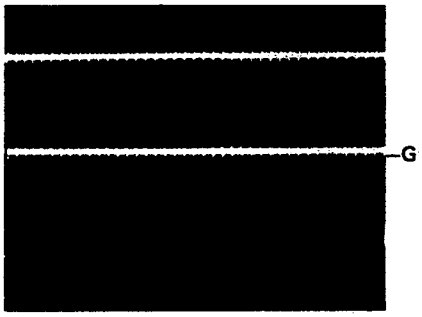 		
㉓ LRCK 2V/div. 5μs/div. PLAY 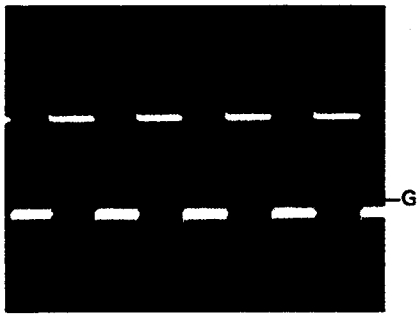 		
㉔ L or R OUT 0.5V/div. 0.2ms/div. PLAY (1kHz: FS) 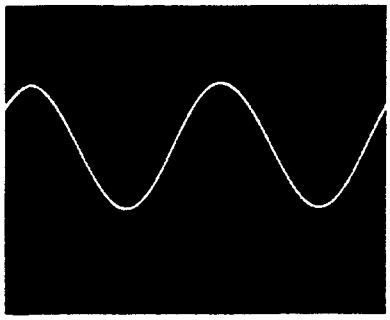		

11. EXPLODED VIEW

NOTE:

- *For your Parts Stock Control, the fast moving items are indicated with the marks ★★ and ★.*
  ★★: GENERALLY MOVES FASTER THAN ★.
  This classification shall be adjusted by each distributor because it depends on model number, temperature, humidity, etc.
- *Parts whose parts numbers are omitted are subject to being not supplied.*
- *Parts marked by "◉" are not always kept in stock. Their delivery time may be longer than usual or they may be unavailable.*

● Parts List

Mark	No.	Part No.	Description
	1	BMZ30P050FMC	Screw
	2		Case
	3		Insulator
	4	CBA1094	Transportation Screw
	5	CRP1031	Caution Card
	6		Seal
	7		Cord
	8	BPZ20P050FMC	Screw
◉	9	CWX1182	Display Unit(UC)
◉		CWX1185	Display Unit(EW)
◉		CWX1186	Display Unit(EI)
◉		CWX1189	Display Unit(WG)
	10		Cushion
	11	CNP1656	P.C.Board
	12	CNP1655	P.C.Board
	13	CSS1023	Crystal
	14		Insulator
★★	15	CEL1089	Lamp(UC,EW,WG)
★★		CEL1088	Lamp(EI)
	16		Film
	17		Shield Plate
	18		Holder
	19		Lens
	20	CWW1161	LCD(UC)
		CWW1203	LCD(EW,WG)
		CWW1162	LCD(EI)
	21		Case
	22		Cushion
★	23	CAC1621	Button
★	24	CAC1620	Button
★	25	CAC1614	Button
★	26	CAC1615	Button
★	27	CAC1616	Button
★	28	CAC1617	Button
★	29	CAC1618	Button
★	30	CAC1619	Button
	31	CXA2790	Grille Unit(UC)
		CXA2791	Grille Unit(EW,EI)
		CXA2792	Grille Unit(WG)
	32	PVZ14P045FZK	Screw
	33		Holder
	34		Cover
	35		Lens
	36		Lens
★	37	CAC1622	Button
	38		Cushion
	39		Cushion
★	40	CAC1608	Button
★	41	CAC1609	Button
★	42	CAC1613	Button
★	43	CAC1610	Button
★	44	CAC1611	Button
★	45	CAC1612	Button
	46	PMS30P040FMC	Screw
	47		Case
	48	CEG1037	Cover
	49	CDE2324	Cord(UC)
		CDE1895	Cord(EW,EI,WG)
◉	50	CWR1018	Power Supply Unit (UC)
◉		CWR1017	Power Supply Unit (EW,EI,WG)
	51		Bracket
	52		Insulator
★★	53	AN7805R	IC
★★	54	AN6540	IC
	55	CKS-462	Plug
	56	BMZ30P060FMC	Screw
	57		Plug
	58		Plug

Mark	No.	Part No.	Description
	59		Case
	60		Insulator
	61		Heat Sink
	62	BMZ30P040FMC	Screw
	63		Holder
	64		Film
	65		Holder
	66		Film
◉	67	CWH1056	Amp Unit
	68	CDE1771	Cord
	69		Plug
	70		Plug
	71	PMS30P100FMC	Screw
	72		Holder
	73		Side Cover
	74		Connector
◉	75	CWE1105	Tuner Unit(WG)
	76	BMZ30P040FMC	Screw(UC, EW, EI)
		PMS30P040FMC	Screw(WG)
	77		Holder(UC, EW, EI)
	78		Plug
	79		Plug
	80	CNS1472	Cap
	81		Plug
	82	CPV1007	Buzzer
	83	RS1/2P102JL	Resistor
	84		Plug
	85	CKS1075	Connector
	86	CKS1082	Connector
	87	CKS1083	Connector
	88	CKS1415	Connector
	89	CSS1027	Crystal
◉	90	CWX1181	CD Unit(UC)
◉		CWX1184	CD Unit(EW, EI)
◉		CWX1188	CD Unit(WG)
	91		Plug
	92		Plug(4P···UC, EW, EI)
			Plug(10P··WG)
	93		Plug
	94	CKS1328	Connector
	95		Spacer
	96		Insulator

Mark	No.	Part No.	Description
	97	BMZ26P040FMC	Screw
	98		Cushion
	99		Plate
	100		Plate
	101		Antenna Holder
	102		Chassis Unit(UC)
			Chassis Unit(EW, EI)
			Chassis Unit(WG)
	103		Side Cover
	104	CDH1068	Antenna Cable(UC, EW, EI)
	105	CDH1067	Antenna Cable(WG)
	106		Case(WG)
	107		Insulator(WG)
	108		Bracket
	109	CDE1775	Cord(UC)
	110	CNW-829	Cap(UC)
	111	CNC1484	Holder
	112	CNS1403	Panel
	113	CNC1631	Handle
	114	CDE1772	Cord(EW, EI, WG)
	115	CBH-865	Spring
	116	CNV1445	Cap(EW, EI, WG)
◉	117	CWE1096	FM Unit(UC)
◉		CWE1097	FM Unit(EW, EI)
	118		Holder(UC, EW, EI)
	119	CWB1032	Front End Unit
	120		Insulator
	121		Connector(UC, EW, EI)
	122		Connector(UC, EW, EI)
◉	123	CWA1007	AM Unit(UC, EW, EI)
◉	124	CXK2200	CD Mechanism Unit
	125		Cushion
	126	PMF26P060FMC	Screw
	127		Connector
	128	CSS1030	Crystal
	129		Plate
	130		Case(WG)
	131		Insulator(WG)
	132	BMZ30P050FMC	Screw(WG)

http://www.manualscenter.com

●Exploded View

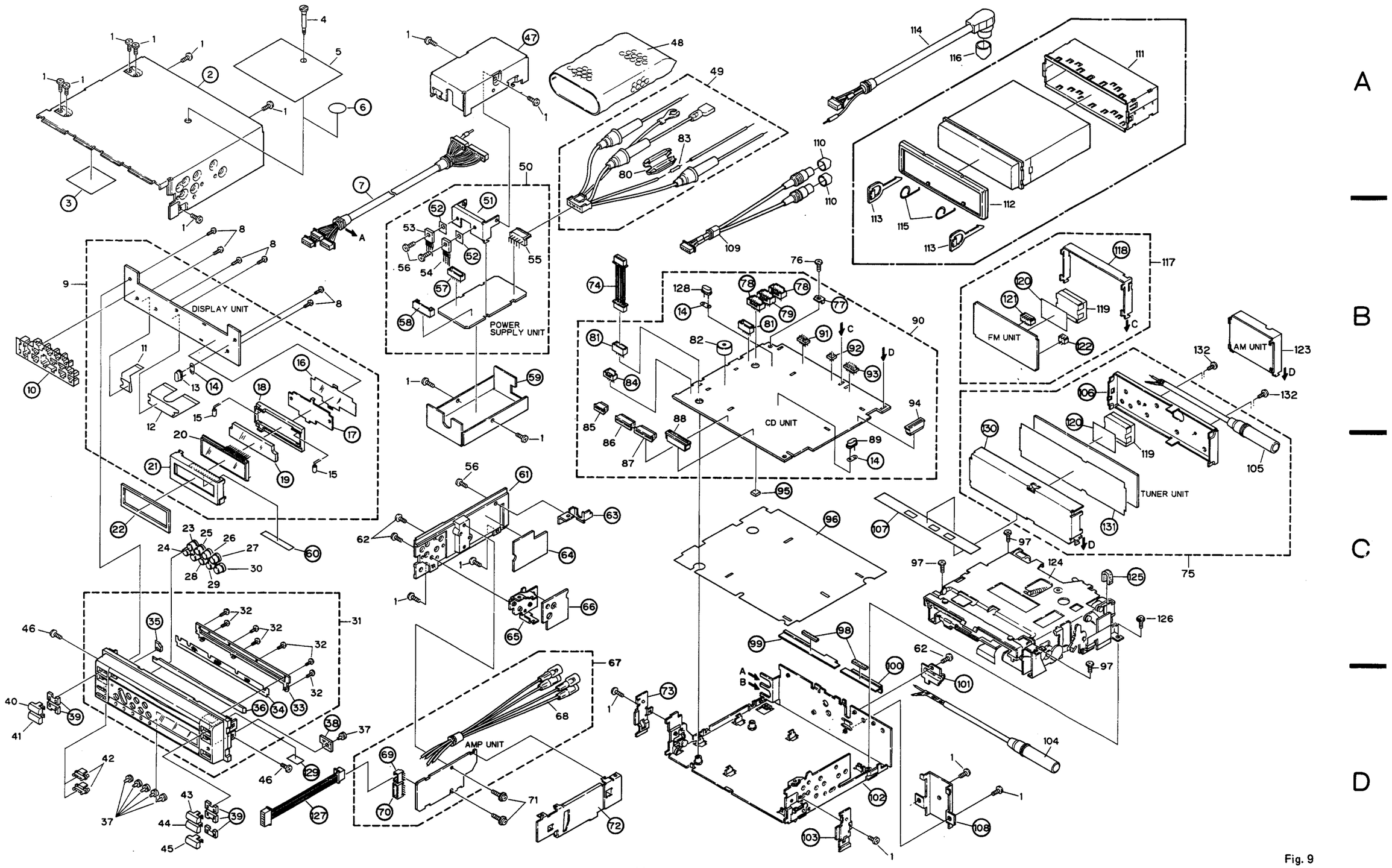

Fig. 9

http://www.manualscenter.com

12. CD MECHANISM EXPLODED VIEW

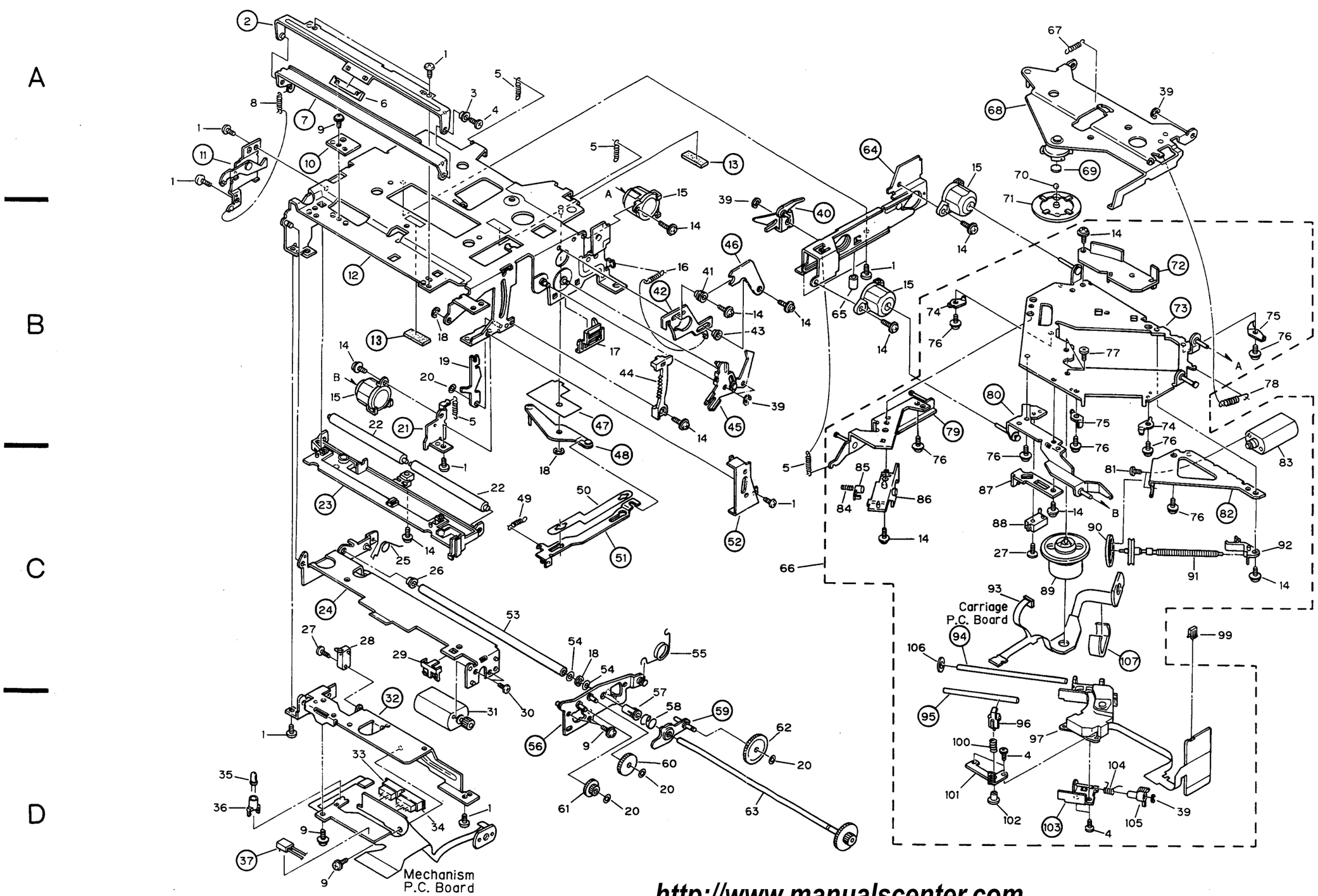

http://www.manualscenter.com

Fig. 10

● **Parts List**

Mark	No.	Part No.	Description
	1	BMZ26P030FMC	Screw
	2		Bracket
	3	CLA1311	Collar
	4	CBA1062	Screw
	5	CBH1182	Spring
	6	CNV1641	Holder
	7		Arm
	8	CBH1137	Spring
	9	CBA1076	Screw
	10		P.C.Board
	11		Bracket Unit
	12		Chassis Unit
	13		Cushion
	14	CBA1075	Screw
	15	CXA2148	Damper Unit
	16	CBH1139	Spring
	17	CNV1633	Holder
	18	YE20FUC	Washer
	19	CNV1631	Cam
	20	CBF-166	Washer
	21		Bracket
	22	CNV1636	Roller
	23		Guide
	24		Arm Unit
	25	CBH1135	Spring
	26	CNV1884	Bearing
	27	CBA1070	Screw
★★	28	CSN1009	Switch(Disc Set)
	29	CNV1644	Holder
	30	HBA-175	Screw
★★	31	CXA2129	Motor Unit(Loading)
	32		Bracket
	33	CKS-719	Connector
	34	CKS-721	Connector
★	35	SLH-34VC3F	LED
	36	CNV2061	Holder
	37		Connector
	38	CNP1711	P.C.Board
	39	YE15FUC	Washer
	40		Arm Unit
	41	CLA1472	Collar
	42		Lever
	43	CLA1309	Collar
	44	CNV1630	Gear
	45		Arm Unit

Mark	No.	Part No.	Description
	46		Holder
	47		Spacer
	48		Arm Unit
	49	CBH1134	Spring
	50	CNM2152	Spacer
	51		Lever Unit
	52		Bracket
	53	CNV1634	Roller
	54	CBF1002	Washer
	55	CBH1133	Spring
	56		Bracket Unit
	57	CNV1632	Bearing
	58	CBH1181	Spring
	59		Arm Unit
	60	CNV1628	Gear
	61	CNV1627	Gear
	62	CNV1629	Gear
	63	CXA2456	Gear Unit
	64		Bracket Unit
	65	CNY-265	Cushion
◉	66	CXA1910	Carriage Unit
	67	CBH1136	Spring
	68		Arm Unit
	69		Spacer
	70	CNR1079	Ball
	71	CNV1643	Clamper
	72		Guide
	73		Chassis Unit
	74	CNC1738	Holder
	75	CNC1739	Holder
	76	PMS20P030FMC	Screw
	77	HBA-163	Screw
	78	CBH1138	Spring
	79		Bracket Unit
	80		Holder Unit
	81	CBA-098	Screw
	82		Bracket
★★	83	CXA2133	Motor Unit(Carriage)
	84	CBH1104	Spring
	85	CNV1844	Spacer
	86	CNV1780	Holder
	87	CNV1674	Holder
★★	88	CSN-094	Switch(Home)
★★	89	CXM1033	Motor Unit(Spindle)
★★	90	CNT1020	Belt

Mark	No.	Part No.	Description
	91	CXA2375	Screw Unit
	92	CNV1781	Holder
	93	CNP1709	P.C.Board
	94		Shaft
	95		Shaft
	96	CNV1512	Holder
	97	CGY1007	PU Unit
	98	·····	
	99	CBL1010	Short Pin
	100	CBH1105	Spring

Mark	No.	Part No.	Description
	101	CNC1736	Holder
	102	CLA1319	Screw
	103		Holder Unit
	104	CBH1106	Spring
	105	CNV1513	Rack
	106	CNV1863	Cushion
	107		Cover

http://www.manualscenter.com

PIONEER®
The future of sound and vision.

Service Manual

• DEH-66/UC

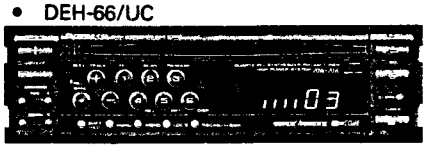

ORDER NO.
CRT 1166

HIGH-POWER COMPACT DISC PLAYER WITH FM/AM TUNER

DEH-66 UC, EW, EI
DEH-66SDK WG

COMPACT disc DIGITAL AUDIO

Note:
- **See the separate manual CX-173 (CRT1161) for the CD mechanism description.**
- **See the service manual CDX-M100 (CRT1136) for CD mechanism circuit description.**

CONTENTS

1. SPECIFICATIONS 1
2. SAFETY INFORMATION (DEH-66/EW, EI) 2
3. CHANGING THE TUNING STEPS (DEH-66/UC) 3
4. SECRET CODE 3
5. ADJUSTING VOLUME AND TONE 4
6. USING THE TUNER 5
7. PLAYING COMPACT DISCS 6
8. CONNECTION 7
9. DISASSEMBLY 8
10. ADJUSTMENT 10
11. SCHEMATIC CIRCUIT DIAGRAM (TUNER DEH-66/UC) 54
12. CONNECTION DIAGRAM (TUNER DEH-66/UC) 58
13. SCHEMATIC CIRCUIT DIAGRAM (TUNER DEH-66SDK/WG) 62
14. CONNECTION DIAGRAM (TUNER DEH-66SDK/WG) 66
15. SCHEMATIC CIRCUIT DIAGRAM (TUNER DEH-66/EW, EI) 70
16. CONNECTION DIAGRAM (TUNER DEH-66/EW, EI) 74
17. SCHEMATIC CIRCUIT DIAGRAM (CD MECHANISM) 78
18. CONNECTION DIAGRAM (CD MECHANISM) 82
19. EXPLODED VIEW 89
20. CD MECHANISM EXPLODED VIEW 93
21. ELECTRICAL PARTS LIST 97
22. PACKING METHOD 104

PIONEER ELECTRONIC CORPORATION 4-1, Meguro 1-Chome, Meguro-ku, Tokyo 153, Japan
PIONEER ELECTRONICS SERVICE INC. P.O. Box 1760, Long Beach, California 90801 U.S.A.
PIONEER ELECTRONICS OF CANADA, INC. 505 Cochrane Drive, Markham, Ontario L3R 8E3 Canada
PIONEER ELECTRONIC [EUROPE] N.V. Keetberglaan 1, 2740 Beveren, Belgium
PIONEER ELECTRONICS AUSTRALIA PTY. LTD. 178-184 Boundary Road, Braeside, Victoria 3195, Australia TEL: [03] 580-9911

FK © MAY 1988 Printed in Japan

http://www.manualscenter.com

• CD Player Service Precautions

1. Since these screws protects the mechanism during transport, be sure to affix it when it is transported for repair, etc.
2. For pickup unit (CGY1007) handling, please refer to "Disassembly" (Fig. 4). During replacement, handling precautions shall be taken to prevent an electrostatic discharge (protection by a short pin).
3. During disassembly, be sure to turn the power off since an internal IC might be destroyed when a connector is plugged or unplugged.

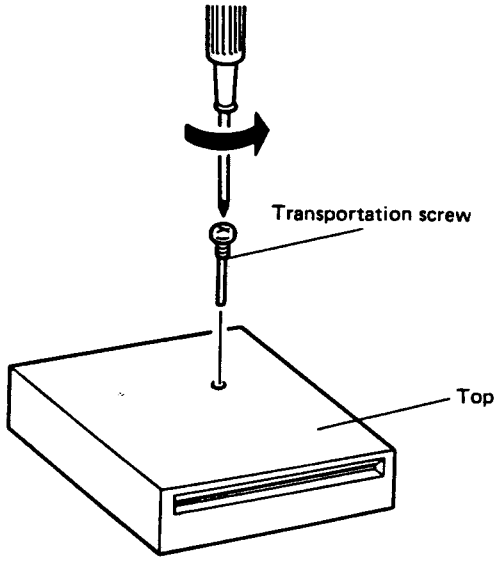

1. SPECIFICATIONS

General

Power source ..... 14.4 V DC (10.8–15.6 V allowable)
Grounding system ..... Negative type
Max. current consumption ..... 5.0 A
Dimensions (chassis) ..... 178 (W) × 50 (H) × 150 (D) mm
[7 (W) × 2 (H) × 5–7/8 (D) in.]
(nose) ..... 170 (W) × 46 (H) × 16 (D) mm
[6–3/4 (W) × 1–3/4 (H) × 5/8 (D) in.]
Weight ..... 1.8 kg(4 lbs.)

Amplifier

Continuous power output is 10 W per channel min. into 4 Ω, both channels driven 50 to 15,000 Hz with no more than 5 % THD.
Max. power output ..... 20 W + 20 W (EIAJ)
Load impedance ..... 4 Ω (4–8 Ω allowable)
Max. output level/
output impedance (pre out)(UC) ..... 500 mV/1 kΩ
Max. output level/
output impedance (pre out)(WG, EW, EI) ..... 250 mV/1 kΩ
Tone controls (bass) ..... ± 10 dB (100 Hz)
(treble) ..... ± 10 dB (10 kHz)
Loudness contour ..... + 10 dB (100 Hz), + 7 dB (10 kHz)
(volume: – 30 dB)

CD Player

System ..... Compact disc audio system
Usable discs ..... Compact disc
Signal format ..... Sampling frequency: 44.1 kHz
Number of quantization bits: 16; linear
Frequency characteristics ..... 5–20,000 Hz (± 1 dB)
Signal-to-noise ratio ..... 85 dB (1 kHz) (IEC-A network)
Dynamic range ..... 87 dB (1 kHz)
Wow and flutter ..... Below measurement range
Distortion factor ..... 0.008% (1 kHz, 0 dB)
Number of channels ..... 2 (stereo)

• UC

FM tuner

Frequency range
(0.2 MHz channel step) ..... 87.9–107.9 MHz
(50 kHz channel step) ..... 87.5–108 MHz
Usable sensitivity ..... 12 dBf (1.1 μV/75 Ω, mono)
50 dB quieting sensitivity ..... 17 dBf (1.9 μV/75 Ω, mono)
Signal-to-noise ratio ..... 70 dB (IHF-A network)
Distortion ..... 0.3% (at 65 dBf, 1 kHz, stereo)
Frequency response ..... 30–15,000 Hz (± 3 dB)
Stereo separation ..... 40 dB (at 65 dBf, 1 kHz)
Selectivity ..... 70 dB (2ACA) (± 400 kHz)

AM tuner

Frequency range
(10 kHz channel step) ..... 530–1,620 kHz
(9 kHz channel step) ..... 531–1,602 kHz
Usable sensitivity ..... 18 μV (25 dB) (S/N: 20 dB)
Selectivity (10 kHz channel step) ..... 50 dB (± 10 kHz)
(9 kHz channel step) ..... 50 dB (± 9 kHz)

• WG, EW, EI

FM tuner

Frequency range ..... 87.5–108 MHz
Usable sensitivity ..... 12 dBf (1.1 μV/75 Ω, mono)
50 dB quieting sensitivity ..... 17 dBf (1.9 μV/75 Ω, mono)
Signal-to-noise ratio ..... 70 dB (IEC-A network)
Distortion ..... 0.3% (at 65 dBf, 1 kHz, stereo)
Frequency response ..... 30–15,000 Hz (± 3 dB)
Stereo separation ..... 40 dB (at 65 dBf, 1 kHz)

MW tuner

Frequency range ..... 531–1,602 kHz
Usable sensitivity ..... 18 μV (25 dB) (S/N: 20 dB)
Selectivity ..... 50 dB (± 9 kHz)

LW tuner

Frequency range ..... 153–281 kHz
Usable sensitivity ..... 30 μV (30 dB) (S/N: 20 dB)
Selectivity ..... 50 dB (± 9 kHz)

These specifications were determined and are presented in accordance with specification standards established by the Ad Hoc Committee of Car Stereo Manufacturers.

Note:
Specifications and the design are subject to possible modification without notice due to improvements.

http://www.manualscenter.com

2. SAFETY INFORMATION (DEH-66/EW, EI)

1. Safety Precautions for those who Service this Unit.

- Follow the adjustment steps (see pages 10 through 31) in the service manual when servicing this unit. When checking or adjusting the emitting power of the laser diode exercise caution in order to get safe, reliable results.

Caution:

1. **During repair or tests, minimum distance of 13cm from the focus lens must be kept.**
2. **During repair or tests, do not view laser beam for 10 seconds or longer.**

2. A "CLASS 1 LASER PRODUCT" label is affixed to the bottom of the player.

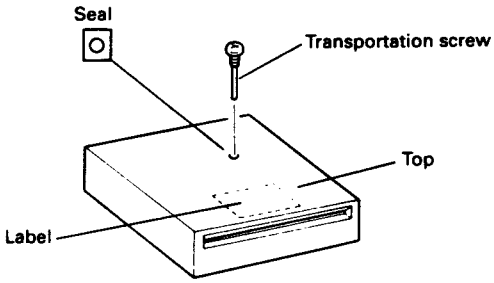

3. The triangular label is attached to the mechanism unit plate unit.

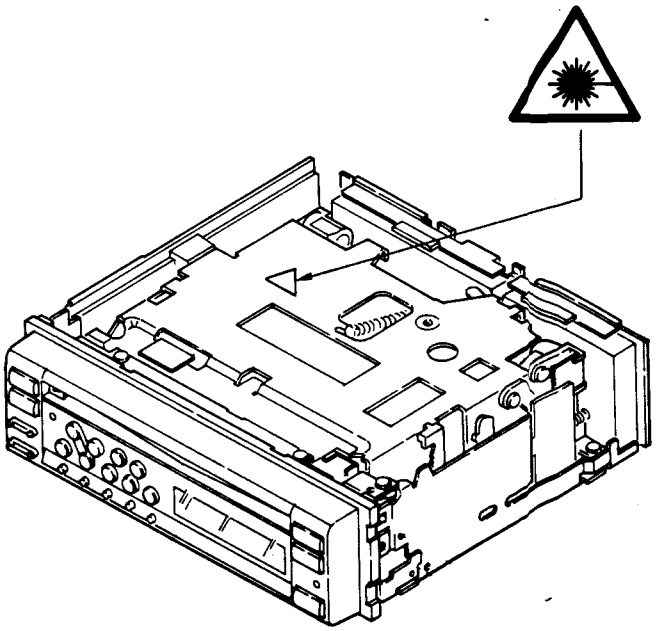

4. Specifications of Laser Diode

Specifications of laser radiation fields to which human access is possible during service.

Wavelength	=	780 nanometers
Radiant power	=	69.7 microwatts (Through a circular aperture stop having a diameter of 80 millimeters)
		0.55 microwatts (Through a circular aperture stop having a diameter of 7 millimeters)

3. CHANGING THE TUNING STEPS (DEH-66/UC)

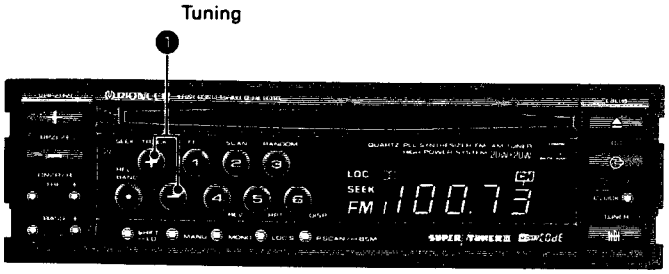

Changing The Tuning Steps

The unit is shipped from the factory preset for 10 kHz steps in AM and 0.2 MHz steps in FM. The following procedure should be used for applications outside of North America, Central America and South America to change the tuning steps and frequency ranges.

1. Turn the ignition switch off.
2. While pressing both the (+) and the (–) sides of button ❶, turn the ignition switch on. It should be noted that changing the tuning steps also deletes frequencies stored in the tuning memories.

	Specification	Initial setting	New setting
AM	Tuning steps	10 kHz steps	9 kHz steps
	Frequency range	530 – 1,620 kHz	531 – 1,602 kHz
FM	Tuning steps	0.2 MHz steps	50 kHz steps
	Frequency range	87.9 – 107.9 MHz	87.5 – 108 MHz

4. SECRET CODE

This unit is equipped with a secret code function. The secret code (4-digit) electronically locks the unit to reduce the danger of theft.
The code is preset to 0000 at the time of purchase, and the unit can be used normally without altering the code as preset. It is recommended, however, that the user change the code to another value to take full advantage of the anti-theft properties of this system.
Once a code is set, the unit will operate normally without input of the secret code, even if the ignition of the vehicle is switched OFF and then ON again. Should power to the unit be interrupted due to a battery change, repairs, however, the unit will fail to operate when power is restored unless the preset secret code is first entered. Three consecutive wrong inputs of the code will cause the unit to lock electronically and accept no input of code for three hours. Once operation is restored, three more wrong code inputs result in another three hours of electronic lock up. This feature helps to prevent breaking of the secret code through sequential or random input.
These features mean that once the power supplied to the unit is completely cut, further operation is impossible except for those who know the secret code. This makes the unit unusable if stolen, thus reducing the danger of theft.

- When taking the unit to a service station for repair, be sure to either tell the service personnel of the registered code or return the value to 0000.
- Should you forget your registered secret number, consult your local service station taking along such proof of purchase and ownership as the original receipt, etc.

Accessory Sticker and Card

- Affix the sticker on a window of the vehicle in which the unit is installed to inform potential thieves of the anti-theft function of the unit.
- Write the secret code, unit model number, and unit serial number on the card and store it in a safe place outside of the vehicle itself. The serial number of this device is located on the bottom of the unit. This information can then be made available to the police and your PIONEER service station should your unit be stolen.

- **UC**

- **WG, EW, EI**

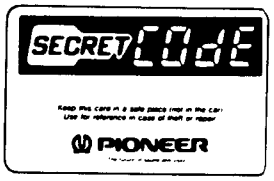

5. ADJUSTING VOLUME AND TONE

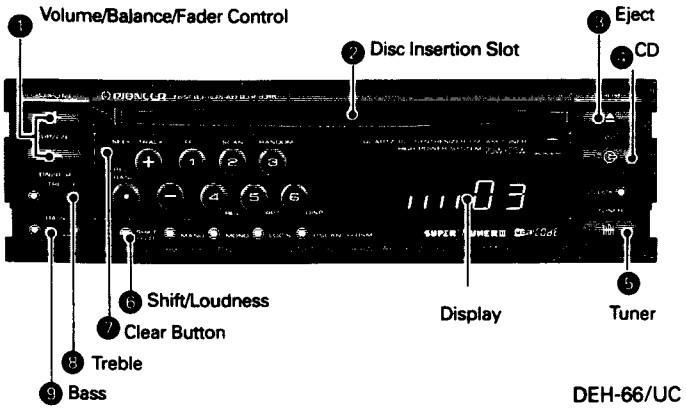

Using the Clear button

Once all wiring is complete, press button ❼ with a thin, pointed object. Though not a normal occurrence, the microprocessor which controls the operation of this unit can be affected by electrostatic noise. This generally is indicated by such symptoms as no power being supplied when you switch the unit on, failure of buttons and controls, or an abnormal display. Should this happen, press button ❼ with a thin, pointed object to reset the microprocessor. Note that doing so also resets all audio controls, so you will have to make any desired settings again. This operation deletes all memory contents, such as frequencies stored in the preset memory, so you will have to make any desired settings again. Pressing this button causes the message CODE to appear on the display. Input the previously registered secret code at this time.

Switching Power On

Tuner

Press button ❺ to switch the tuner power on. Press button ❺ again to switch the power off.

CD Player

When a disc is inserted half-way into the disc insertion slot ❷ with its label side upward, the disc is automatically loaded and played. Press button ❸ to stop play. Press button ❸ again to restart play from the beginning of the track at which play was stopped.
To eject the disc, press button ❸.

- To change from disc mode to tuner mode, press button ❺.
  To change from tuner mode to disc mode, press button ❸.
- When the power is switched on, the display shows the volume for about 2 seconds.

Adjusting Volume, Balance and Fader

When the display indicates disc or tuner, press button ❶ to adjust the volume. Each press of button ❻ changes the display and the function of button ❶ as follows:
Volume → Balance → Fader

Adjusting Bass and Treble

Adjusting Bass

Pressing the (+) side of button ❾ increases bass, while the (–) side decreases bass.

Adjusting Treble

Pressing the (+) side of button ❽ increases treble, while the (–) side decreases treble.

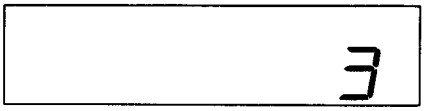

- When you're adjusting balance, fader, bass, or treble settings, the indicator will stop at the center setting. About 3 seconds after adjustment has been made, the display returns to its previous state.

Using the Loudness Function

Press button ❻ for about two seconds and the "LD" indication will appear on the display. This loudness function lets you enhance both high and low frequencies to give a more natural sound at low volumes. To cancel this function, press button ❻ again for about two seconds.

Adjusting Volume

Pressing the (+) side of button ❶ increases the volume, while the (–) side decreases it.

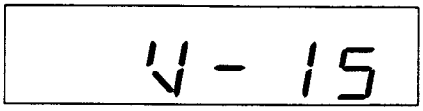

Adjusting Balance

Pressing the (+) side of button ❶ shifts the balance to the left speaker, while the (–) side shifts it to the right speaker.

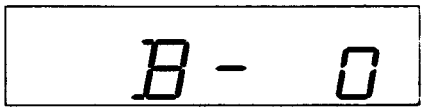

Adjusting the Fader

This function controls the balance between the front and rear speakers of a 4-speaker system. Pressing the (+) side of button ❶ shifts the balance to the front speakers, while the (–) side shifts it to the rear speakers.
For 2-speaker systems, set F-0.

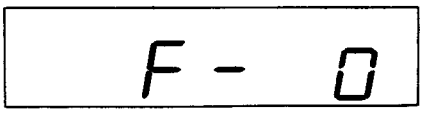

6. USING THE TUNER

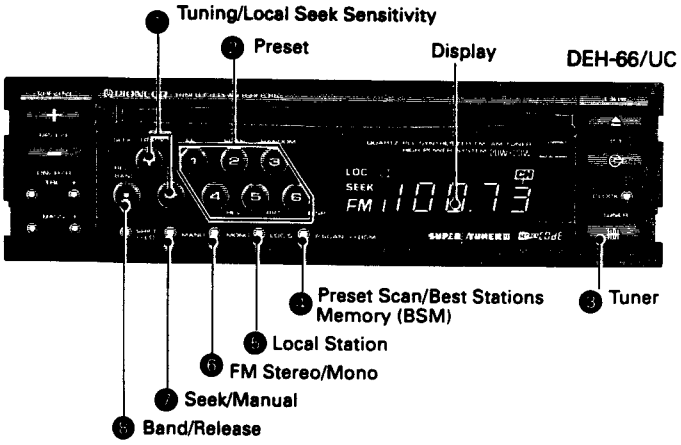

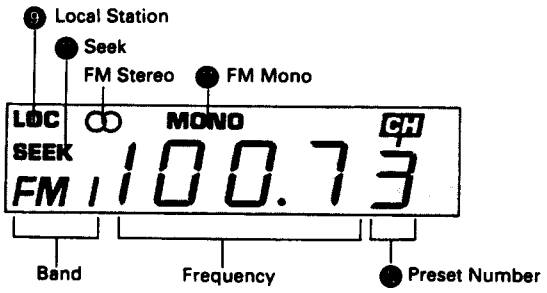

1 Press button ❸ to switch the tuner power on.

2 Press button ❸ to select a band.

FMI→FMII→FMIII→AM(M)
(FM1) (FM2) (FM3)

3 Use seek tuning to tune in a frequency.
Confirm that the "SEEK" indicator ● is shown on the display (if not, press button ❷).
Press the (+) side of button ❶ to automatically tune in the next higher receivable frequency, and the (–) side for a lower frequency.

4 Adjust volume and tone **(see page 4).**

5 Assign the tuned frequency to one of the buttons in bank ❷ (preset memory).
Press and hold down one of the buttons in bank ❷ for at least two seconds. The frequency is assigned to the selected button when the preset number ● stops flashing on the display. Up to 18 FM stations (6 each for FMI, FMII and FMIII), and six AM stations can be assigned to the preset memory buttons in bank ❷.

6 Once a frequency is assigned to a button in bank ❷, you just need to press that button to tune it in.
This also causes the number of the button pressed to appear at position ● on the display.

Preset Scan Tuning

This function lets you automatically monitor the stations assigned to the preset buttons.

1. Press button ❷ to make the channel ("CH") of the preset number ● flash on the display. Each station assigned to the buttons in bank ❷ will be automatically tuned in for about eight seconds.
2. When you hear a station that you like, press button ❷ again to cancel preset scan tuning and remain at that station.

BSM (Best Stations Memory)

This function automatically locates stronger stations and automatically assigns their frequencies to the buttons in bank ❷, from strongest to weakest. It comes in handy when trying to find local stations while driving.

1. Press button ❸ and select a band.
2. Hold down button ❷. After about two seconds, a "beep" will sound to signal that the BSM search has started. At this time, "----" will flash on the display.

3. The frequency display will return once BSM search is complete, and frequencies are assigned to buttons 1 through 6 in bank ❷.

- At the end of the BSM search, the displayed frequency is that assigned to button ① of bank ❷.
- If there are fewer than six strong stations in the area, some of the buttons in bank ❷ will not be assigned frequencies, so they will retain any frequencies assigned to them previously.
- BSM search may take as long as 30 seconds in areas where there are few strong stations.
- You can cancel BSM search by pressing button ❷.

Manual Tuning

Use manual tuning when stations are too weak to be picked up by seek tuning.

1. Press button ❷ to turn "SEEK" indicator ● off.
2. Each press of the (+) side of button ❶ increases the frequency in 0.2 MHz steps in the FM band, 10 kHz in the AM band . Pressing the (–) side of button ❶ decreases the frequency. Holding down either side of button ❶ changes the frequency at high speed.

- FM frequencies are tuned in 50 kHz steps and AM frequencies in 9 kHz steps after the tuning steps are changed.

Switching between FM Stereo and Mono

Generally, it is best to allow the "Super Tuner III" function to automatically set the optimum listening conditions. When there is a large amount of noise, you can press button ❻ for clearer, mono reception ("MONO" ● will appear on the display).

Adjusting Seek Sensitivity

The seek tuning function of this tuner lets you select between a local setting for reception of strong stations only, and a DX (distant) setting for reception of weaker stations. The local setting also has four seek tuning sensitivity levels for FM and two levels for AM to match local conditions.

Changing the Local Seek Sensitivity

1. Use button ❸ to select a band.
2. Hold down button ❺ for more than two seconds to change to the local seek sensitivity display.

(Example: LOC2)

3. While still holding down button ❺, press the (+) side of button ❶ to increase the sensitivity level, and the (–) side to decrease the level as shown below.
   FM : LOC1 ⇄ LOC2 ⇄ LOC3 ⇄ LOC4
   AM : LOC1 ⇄ LOC2
   The LOC4 setting allows reception of only the strongest stations, while lower settings let you receive progressively weaker stations.

Switching Between Local and DX

Press button ❺ to switch between Local and DX (distant) seek tuning. When "LOC" ❶ is shown on the display, seek tuning is performed with the local seek sensitivity. Otherwise, seek tuning is performed with the DX seek sensitivity.

http://www.manualscenter.com

7. PLAYING COMPACT DISCS

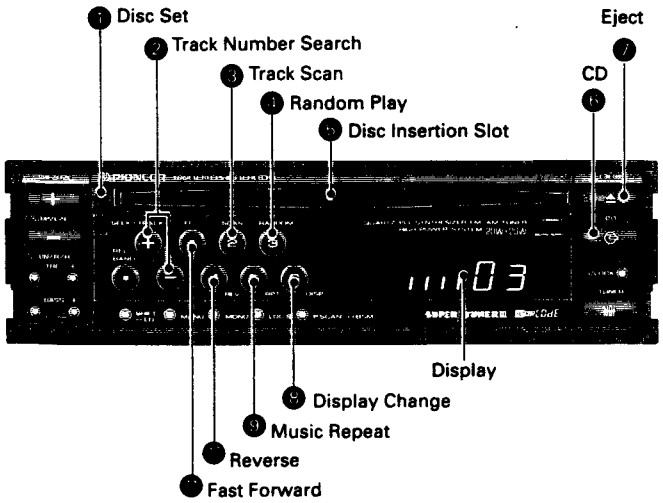

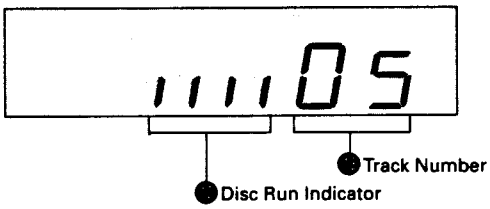

1 When a disc is inserted half-way into the disc insertion slot ❺ with its label side upward, the disc is automatically loaded and played.

(Track number ❸ and disc run ❸ indications will appear on the display.)

2 Use track number search to select a track.

Press the (+) side of button ❷ to increase the number at position ❸, or the (–) side to decrease the number. Holding either side of button ❷ down changes the track number at high speed.

3 Adjust volume and tone (see page 4).

4 To stop CD play, press button ❻.

You can restart CD play from the beginning of the track at which play was stopped by pressing button ❻.

5 To eject or change the disc, press button ❼.

If an ejected disc is pushed back into the slot, it will be loaded and played again.

Note:

- It takes a short time after a disc is loaded before it is played. This is because the CD player requires a setup time to read digital signals from the disc.
- When ► ❶ is displayed, a disc is loaded. If another disc is inserted into the slot at this time, the discs may be damaged or the player may malfunction.
- Do not insert two discs into the slot at the same time. This may cause a malfunction.

Using Track Scan

This function lets you scan through the tracks on a disc by playing only the first ten seconds of each track.

1. Press button ❸ ("SC" will flash).

2. To cancel track scan and continue play at the current track, press button ❸ again.

- After track scan plays through all of the tracks, disc play resumes from the beginning of the track from which track scan was started.

Using Music Repeat

This function lets you listen to a track as many times as you wish.

1. While the track you want to repeat is playing, press button ❹. "RP" will appear on the display. Now the track will repeat until the music repeat function is canceled.

2. To cancel music repeat, press button ❹ again.

- When music repeat is not operational, the whole disc will be played repeatedly.

Using Random Play

This function uses the built-in microprocessor to randomly play tacks from the disc.

1. Press button ❹. "Rd" will appear on the display. Once the current track has been played, the microprocessor will randomly select the next track.

2. To cancel random play, press button ❹ again.

- When the display shows the amount of elapsed disc-play time, it does not show "RP" or "Rd".

Using Fast Forward and Reverse

Press button ❼ for fast forward, and button ❽ for reverse. You can hear the recorded sound during fast forward and reverse.

Amount of Elapsed Disc-Play Time

Press button ❾ to make the display show the amount of elapsed disc-play time. Press button ❺ again to return to the normal display.

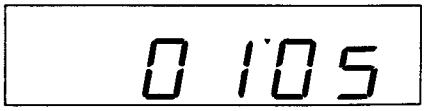

- When a disc in which there are several seconds between tracks is used, the amount of elapsed disc-play time is shown, for example, as –'02 and –'01.

Last Track Memory

This player has a last track memory to restart play from the beginning of the track being played when the disc was stopped, ejected, and then loaded again.

- When the disc is replaced with another, this function does not work, and play starts from the first track.

8. CONNECTION

• UC

2-speaker system

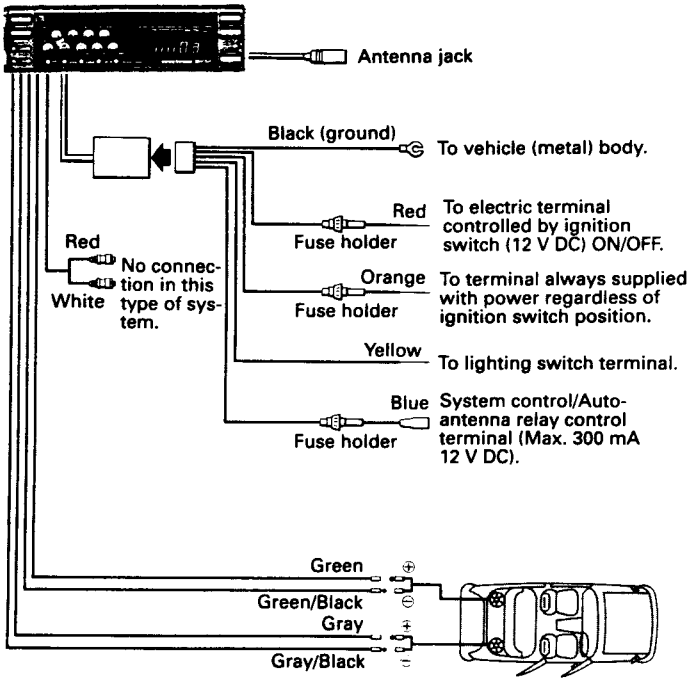

4-speaker system

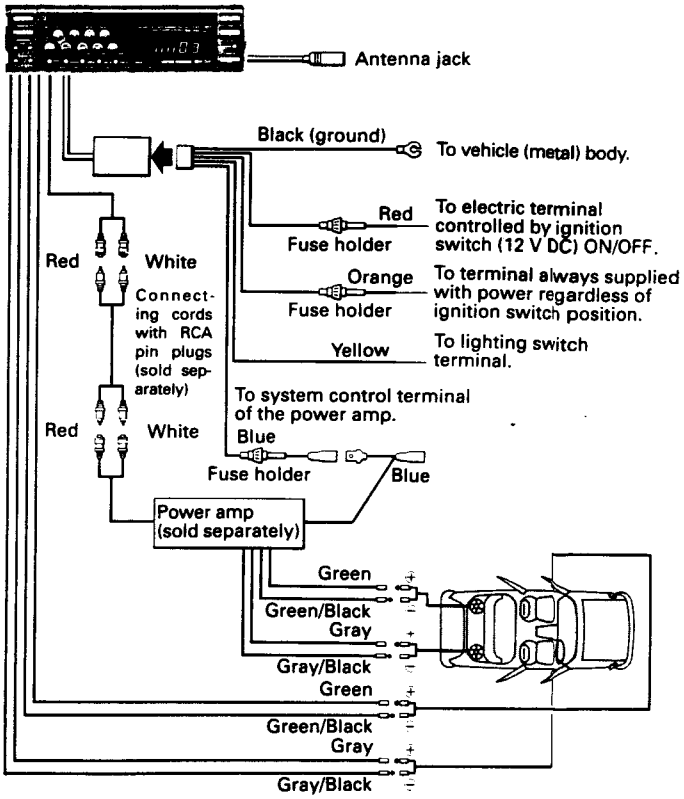

• WG, EW, EI

2-speaker system

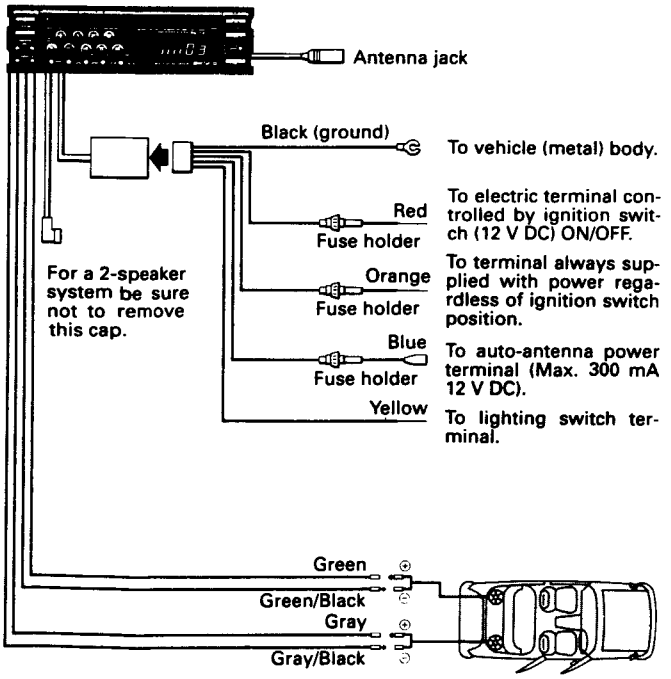

4-speaker system

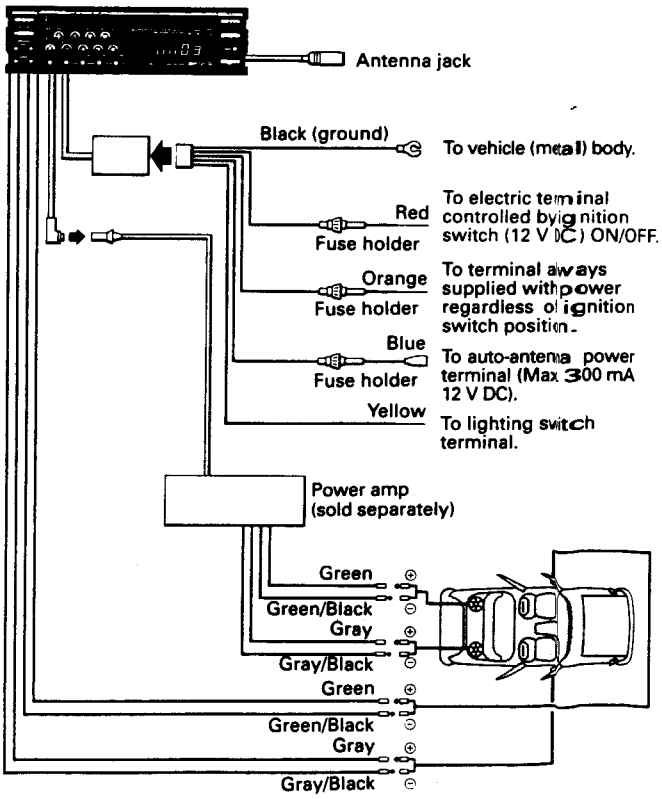

9. DISASSEMBLY

• Removing the Case

1. Remove seven screws, and then remove the case.

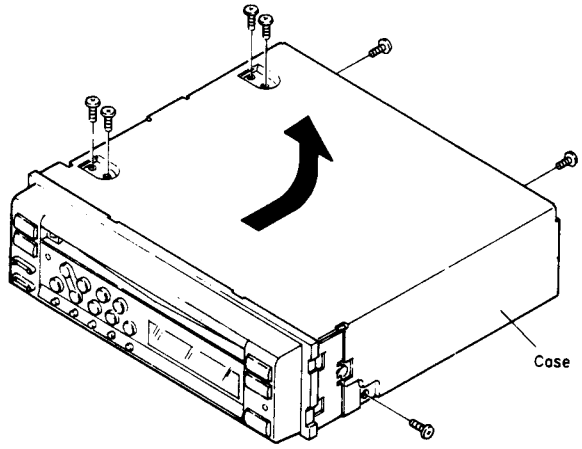

Fig. 1

• Removing the Grille Assy

1. Remove two screws A, and then remove the two side covers.
2. Remove two screws B.
3. Disengage the claws indicated by arrows.
4. Disconnect the three connectors, and then remove the grille assy. (Fig. 3)

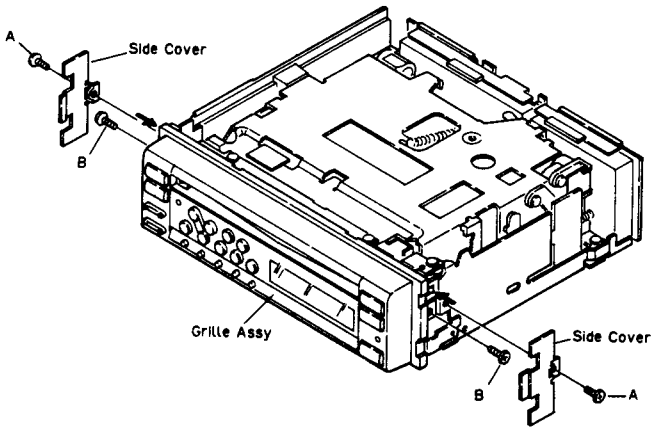

Fig. 2

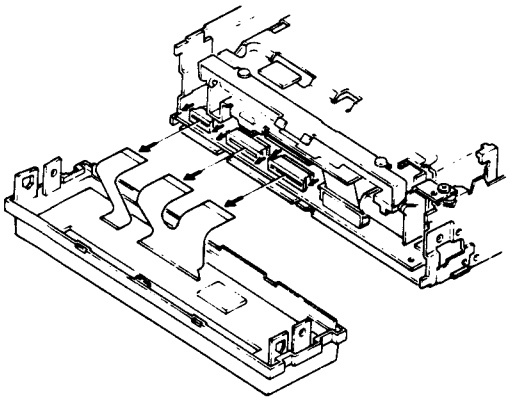

Fig. 3

• Removing the CD Mechanism Unit

1. Remove four screws.
2. Disconnect the two connectors, and then remove the CD mechanism unit.

NOTE; When removing the flexible p.c. board, always insert a shorting pin or insert an inter-pattern short (jumper) before disconnecting the board from the connector.

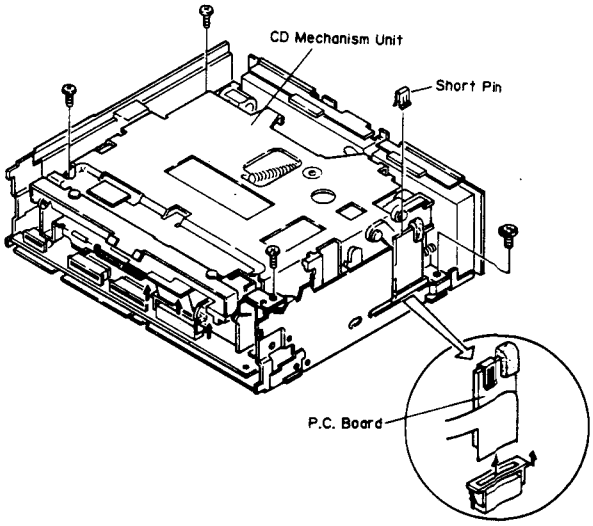

Fig. 4

• Removing the Amp Assy

1. Remove two screws, and then remove the amp assy.
2. Disconnect the two connectors. (Fig. 6)

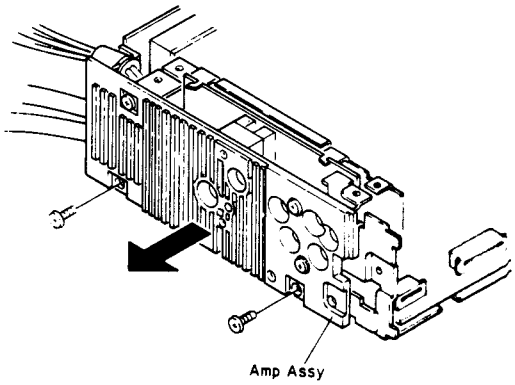

Fig. 5

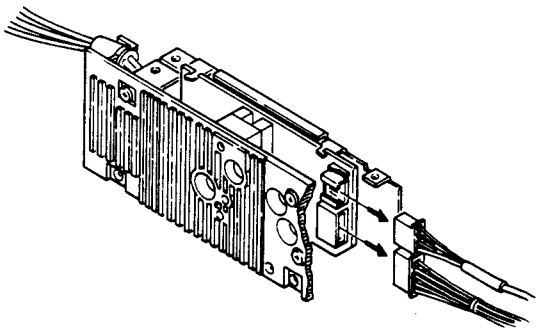

Fig. 6

• Removing the Chassis Unit

1. Remove a screw C.
2. Remove a screw D, and then remove the antenna holder.
3. Remove the cords from chassis unit.
4. Remove solder at location indicated by arrow.
5. Unbend seven tabs and then raise CD unit to remove from chassis unit.

Note: When the chassis unit is disassembled, the ground connection is removed. That is why when checking the tuner unit with the chassis unit disassembled, the CD unit ground and the tuner unit ground are shorted.

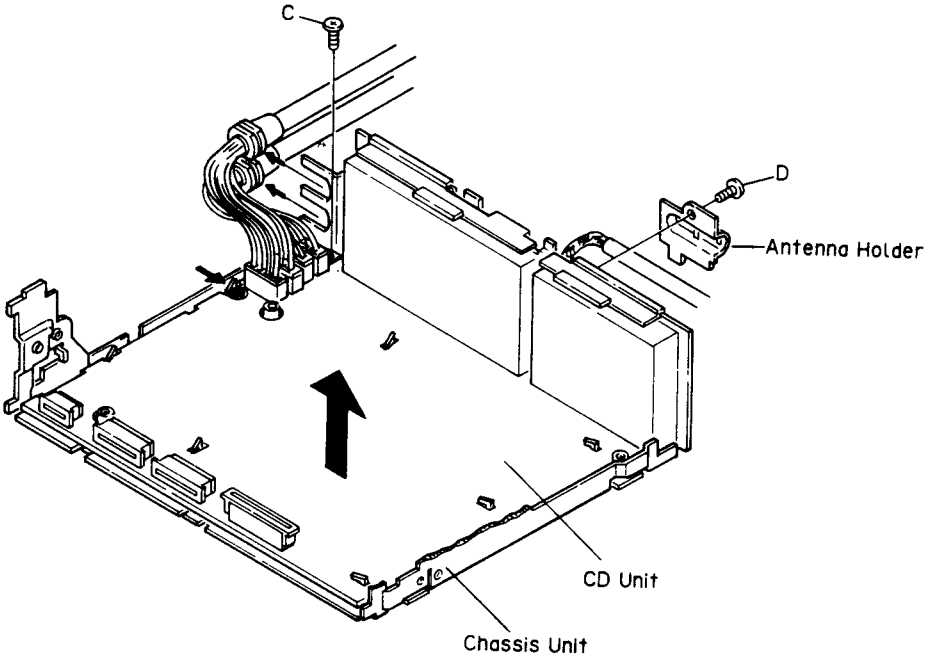

Fig. 7

• Removing the AM, FM, Tuner Unit

1. Remove solders and unbend tabs on back of each unit circuit board until straight.
2. Pull out unit as shown in illustration.

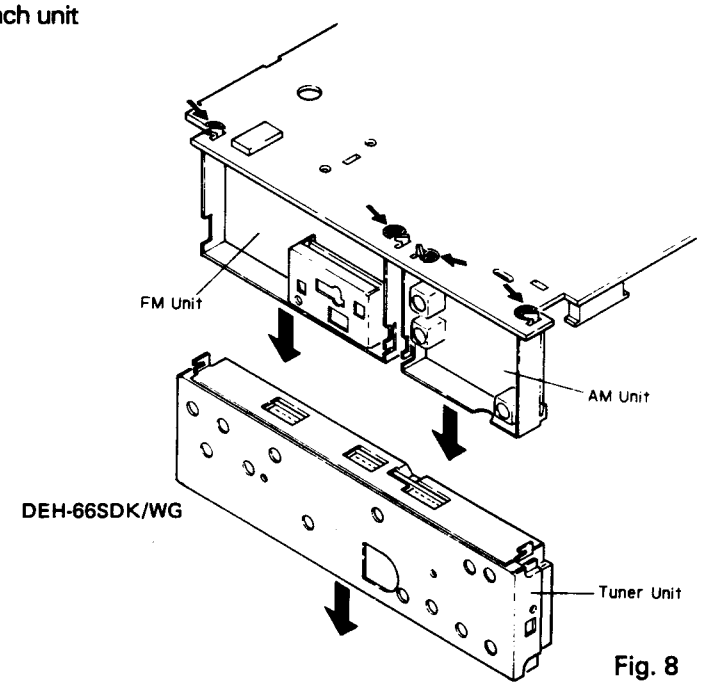

Fig. 8

http://www.manualscenter.com

10. ADJUSTMENT

1) Precautions

- DEH-66 uses a single power supply (+5V) of the regulator. The signal reference potencial, therefore, is connected to pin no. 14 (approx. 2.5V) of IC351 (CXA1081M) instead of GND. (VC at test point)

If VC and GND are connected to each other by mistake during adjustments, not only will it be impossible to measure the potential correctly, but the servo will malfunction and a severe shock will be applied to the pick-up. To avoid this, take special note of the following.

Do not connect the negative probe of the measuring equipment to VC and GND together. It is especially important not to connect the channel 1 negative probe of the oscilloscope to VC with the channel 2 negative probe connected to GND.

And since the frame of the measuring instruments is usually at the same potential as the negative probe, change the frame of the measuring instrument to floating status.

If by accident VC comes in contact with GND, immediately switch the regulator or power OFF.

- Always make sure the regulator is OFF when connecting and disconnecting the various filters and wiring required for measurements.
- Before proceeding to further adjustments and measurements after switching regulator ON, let the player run for about one minute to allow the circuits to stabilize.
- Since the protective systems in the unit's software are rendered inoperative in test mode, be very careful to avoid mechanical and/or electrical shocks to the system when making adjustments.
- Test mode starting procedure
  While pressing the LOC.S button and the TRACK (−) side button, press Clear button.
- Test mode cancelation
  Press Clear button.
- Disc detection during loading and eject operations is performed by means of a photo transistor in this unit. Consequently, if the inside of the unit is exposed to a strong light source when the outer casing is removed for repairs or adjustment, the following malfunctions may occur.
  - During PLAY, even if the eject button is pressed, the disc will not be ejected and the unit will remain in the PLAY mode.
  - The unit will not load a disc.

  When the unit malfunctions this way, either re-position the light source, move the unit or cover the photo transistor.

2) Adjustment Point

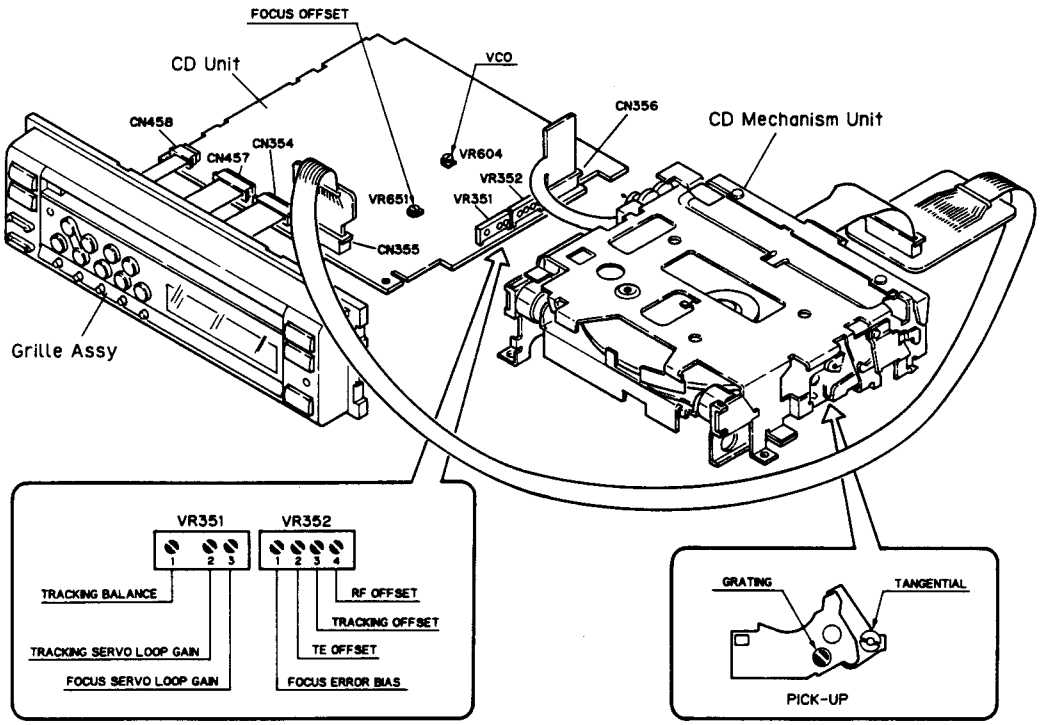

Fig. 9

● Flow Chart

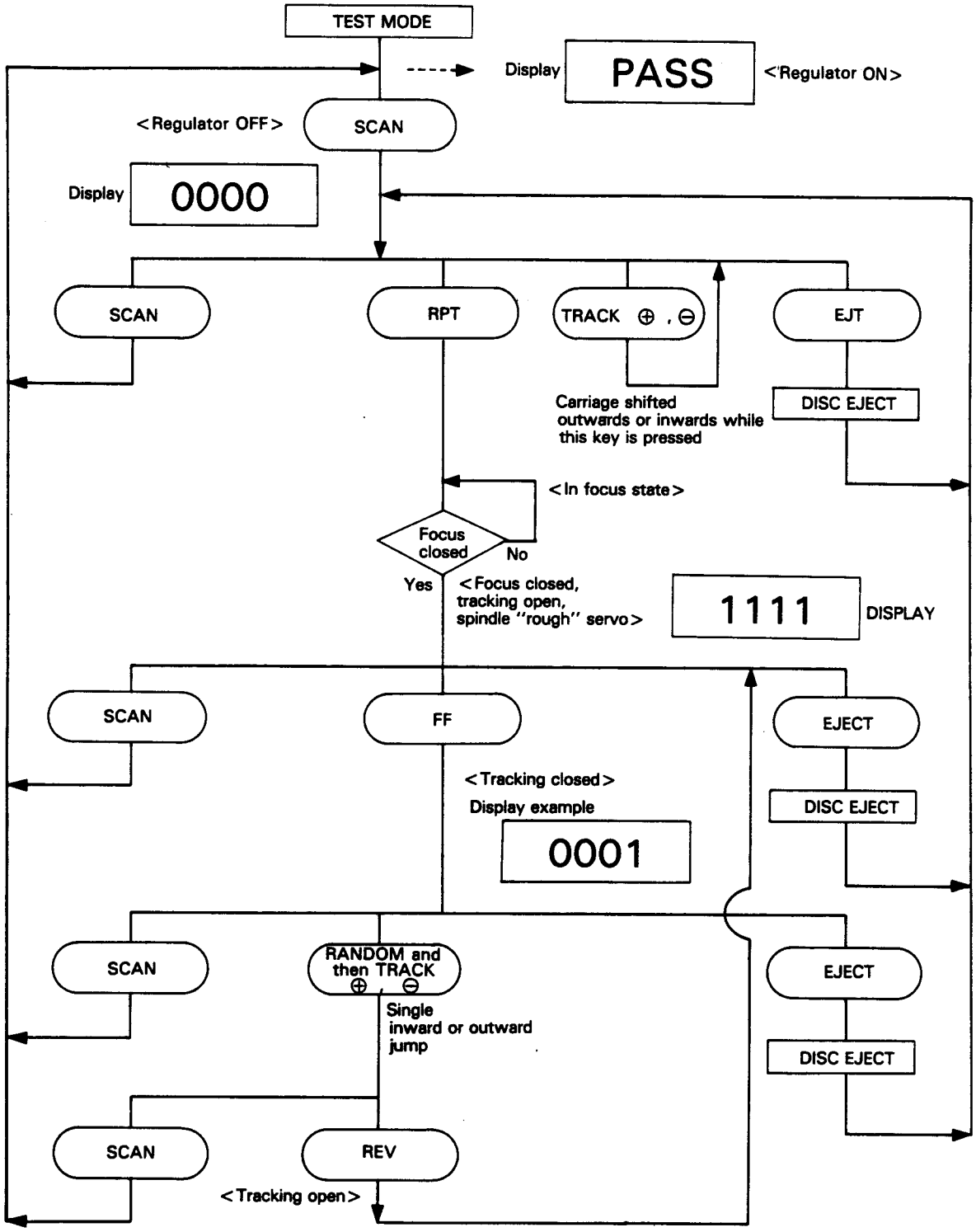
TEST MODE
Display
PASS
<Regulator ON>
<Regulator OFF>
SCAN
Display
0000
SCAN
RPT
TRACK ⊕ , ⊖
EJT
Carriage shifted outwards or inwards while this key is pressed
DISC EJECT
<In focus state>
Focus closed
No
Yes
<Focus closed, tracking open, spindle "rough" servo>
1111
DISPLAY
SCAN
FF
EJECT
<Tracking closed>
Display example
0001
DISC EJECT
SCAN
RANDOM and then TRACK ⊕ , ⊖
EJECT
Single inward or outward jump
DISC EJECT
SCAN
REV
<Tracking open>

10.1 Focus Offset Adjustment

- Purpose: To adjust the electrical offset of the focus amplifier to zero.
- Maladjustment symptoms: No focus closing

● Measuring equipment/ jigs	• Multi-meter or oscilloscope
● Measuring point	• FEO2
● Test disc and setting	• No disc, test mode
● Adjustment position	• VR651

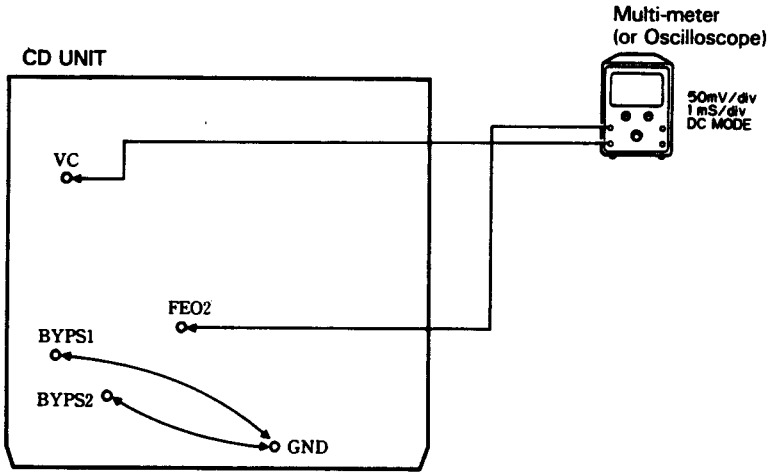

Fig. 11

Adjustment Procedure

1. Connect BYPS 1 and BYPS 2 to GND.
2. Switch regulator ON.
3. Using VR651, adjust the FEO2 DC voltage in reference to VC to a value of 0 ± 25mV.

http://www.manualscenter.com

- **Test point**
  CD Unit

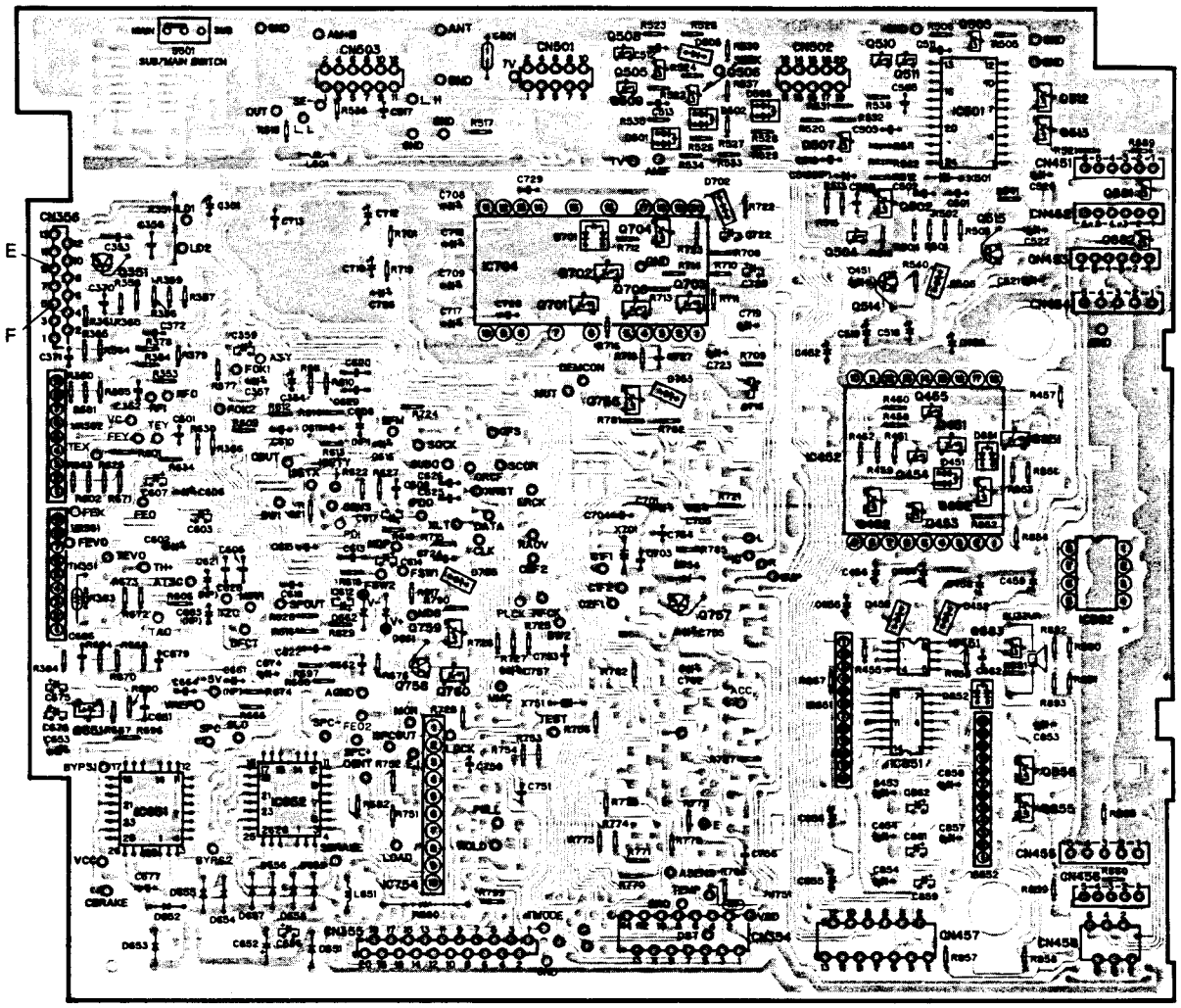

Fig. 10

10.3 RF Offset Adjustment

● Purpose: To adjust the RF amplifier offset to a suitable value

● Maladjustment symptoms: Focus closure fails readily

● Measuring equipment/ jigs	• Oscilloscope
● Measuring point	• RFO
● Test disc and setting	• No disc • Test mode
● Adjustment position	• VR352-4 (RFO)

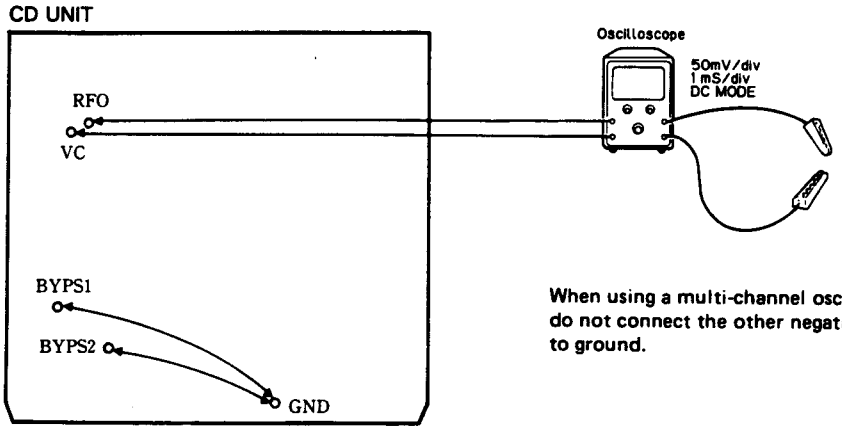

When using a multi-channel oscilloscope, do not connect the other negative probe to ground.

Fig. 13

Adjustment Procedure

1. Connect BYPS 1 and BYPS 2 to GND.
2. Switch regulator ON.
3. Using the oscilloscope, measure the RFO DC voltage in reference to VC, and adjust VR352-4 (RFO) to obtain a reading of +250 ± 25mV.

10.2 VCO Free Run Frequency Adjustment

● Purpose: To adjust the EFM decoder reference clock free- run frequency to a suitable value

● Maladjustment symptoms: Spindle lock not possible, distorted sound or no sound at all

● Measuring equipment/ jigs	• Frequency counter, extension cables
● Measuring point	• Pin no.70 (PLCK) of IC701 (CXD1135Q)
● Test disc and setting	• No disc • Test mode
● Adjustment position	• VR604

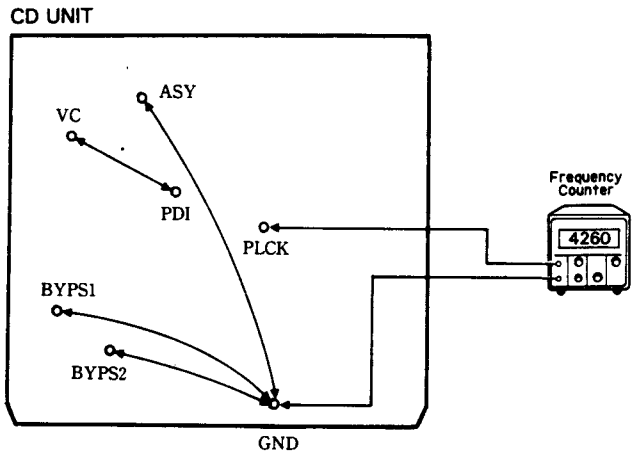

Fig. 12

Adjustment Procedure

1. Connect pin no.26 (TP ASY) of IC351 to GND. Connect BYPS 1 and BYPS 2 to GND.
2. Connect pin no.1 (TP VC) of IC601 to pin no.28 (TP PDI).
3. Switch regulator ON while in test mode.
4. Connect the frequency counter to pin no.70 (TP PLCK) of IC701 (CXD1135Q).
5. Adjust VR604 to obtain a frequency of 4,26 ±0.005MHz.
6. Switch regulator OFF.
7. Disconnect the leads connecting TP VC to TP PDI, and TP ASY to GND.

Note: Connect TP VC and TP PDI with leads kept as short as possible.

Note: Connect the frequency counter ground to TP GND as shown in the figure.

10.5 TE Offset Adjustment - I

● Purpose: To adjust the electrical offset of the tracking servo to zero.

● Maladjustment symptoms: Search times too long, carriage run-away

● Measuring equipment/ jigs	• DC voltmeter
● Measuring point	• TAO low-pass filter output
● Test disc and setting	• No disc • Test mode
● Adjustment position	• VR352-2 (TEO)

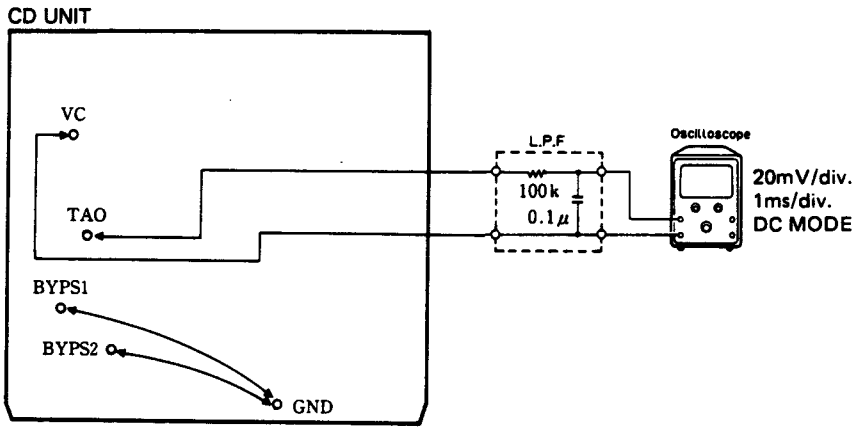

Fig. 15

Adjustment Procedure

1. Check that BYPS 1 and BYPS 2 are connected to GND.
2. Switch regulator ON while in test mode.
3. Press the FF key to close tracking.
4. Using VR352-2 (TEO), adjust the TAO LPF output DC voltage in reference to VC to a value of 0 ± 10mV.
5. Switch regulator OFF.

http://www.manualscenter.com

10.4 Tracking Offset Adjustment

● Purpose: To adjust the electrical offset of the tracking amplifier to zero

● Maladjustment symptoms: Search times too long, carriage run-away

● Measuring equipment/ jigs	• Oscilloscope
● Measuring point	• TAO low-pass filter output
● Test disc and setting	• No disc • Test mode
● Adjustment position	• VR352-3 (TO)

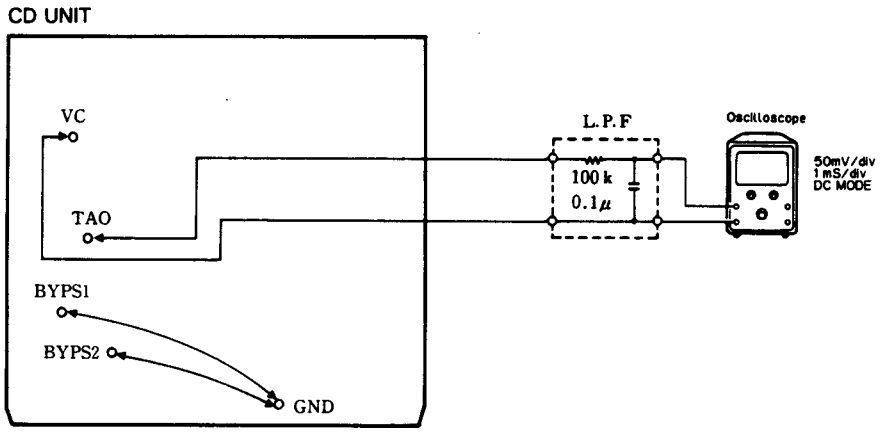

Fig. 14

Adjustment Procedure

1. Insert a low-pass filter between TAO and VC.
2. Check that BYPS 1 and BYPS 2 are connected to GND. GND.
3. Switch regulator ON.
4. Using the oscilloscope, measure the TAO LPF output DC voltage in reference to VC, and adjust VR352-3 (TO) to obtain a reading of 0 ± 25mV.
   The low-pass filter may be left in place for later adjustments.

10.6 Tracking Balance Adjustment - I

● Purpose: To adjust the tracking servo offset to zero.

● Maladjustment symptoms: Search times too long, poor playability, carriage run-away

● Measuring equipment/ jigs	• Oscilloscope
● Measuring point	• TEY (Tracking error signal), low-pass filter output
● Test disc and setting	• SONY TYPE 4 (or TYPE 3) • Test mode
● Adjustment position	• VR351-1 (T. BAL)

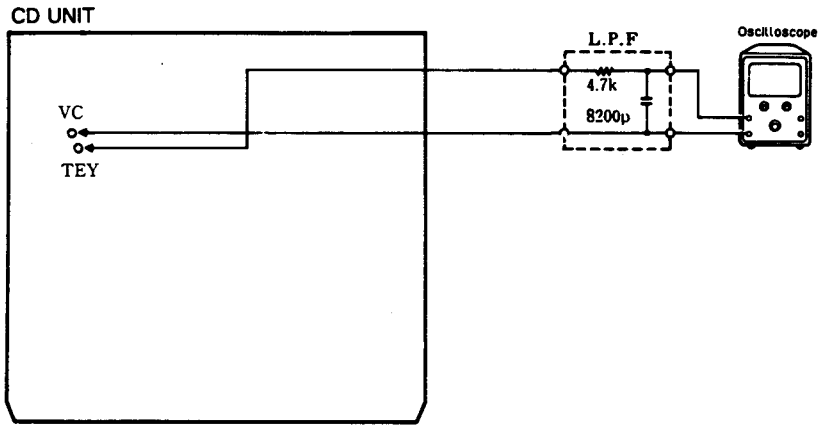

Fig. 16

Adjustment Procedure

1. After checking that regulator is OFF, connect the low-pass filter as shown in the diagram.
2. Disconnect BYPS 1 and BYPS 2 from ground.
3. Set the test disc (SONY TYPE 4) in magazine tray 6 and load the magazine. Switch regulator ON.
4. Using the TRACK ⊕ or ⊖ key, move the pick-up to about the center of the signal surface.
5. Press the [RPT] key to close focus.
6. Using an oscilloscope, observe the TEY signal in respect to VC. Then adjust VR351-1 (T. BAL) to set the positive and negative amplitudes to the same levels. (See Fig. 17-19.)
7. Switch the power OFF.
   The low-pass filter may be left in place for later adjustments.

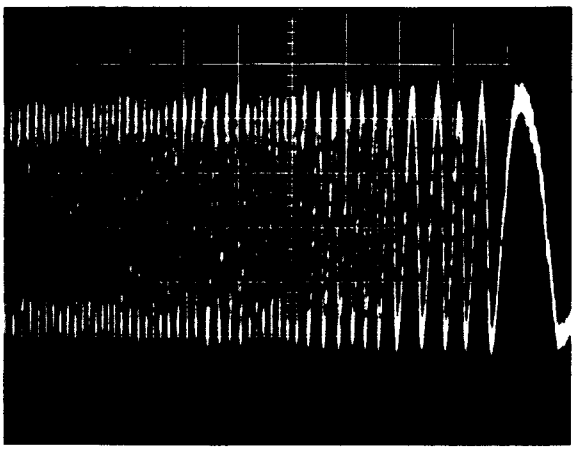

+5% NG

Fig. 17

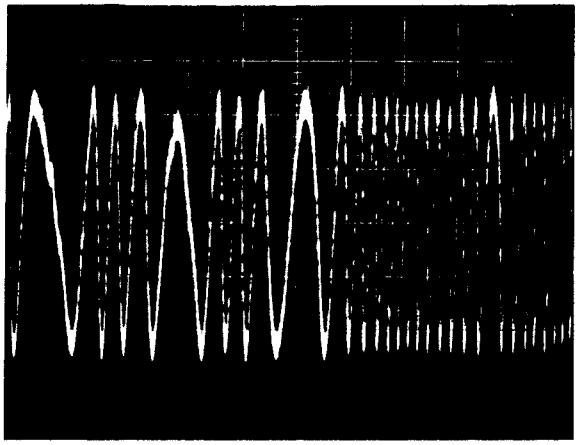

±0% OK

Fig. 18

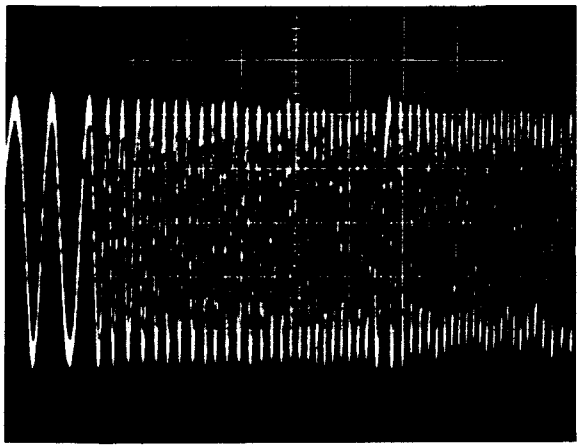

−5% NG

10ms/div.
0.2V/div.
DC Mode

Fig. 19

10.7 Tangential Skew Check

● Purpose: To check whether tangential skew has been misaligned or not when replacing the pick-ip unit.

● Maladjustment symptoms: No disc playback; track jumping

● Measuring equipment/ jigs	• Oscilloscope, extension connectors, screwdriver
● Measuring point	• RFO
● Test disc and setting	• SONY TYPE 4 (or TYPE 3) • Normal mode
● Adjustment position	• Pick-up tangential adjustment screw

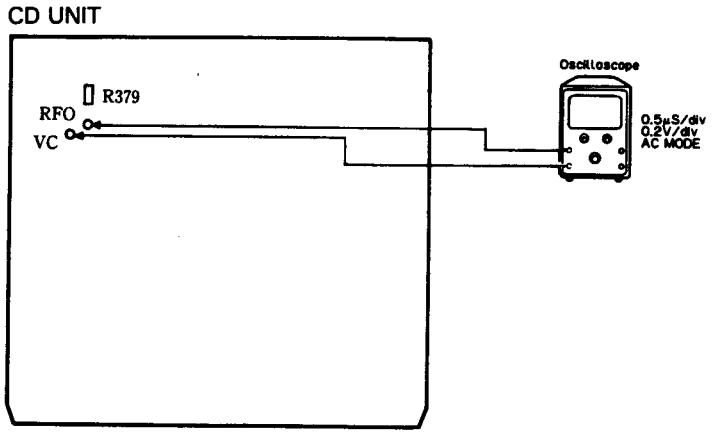

Fig. 20

Adjustment Procedure (with R379 removed)

1. Remove R379 (but reconnect after completing adjustment).
2. Play tune TNO 7 in normal mode. (TYPE 3: TNO 23)
3. Check that the valley at the 11T section of the RF waveform is flat.
4. If out of adjustment, readjust to obtain a flat RF waveform. (See Fig. 21-26) Take care not to knock the pick-up with the screwdriver at this stage. (This kind of accident can result in loss of focus.)
5. Switch the power OFF and reconnect R379.
6. Apply "screw-lock" to the tangential adjustment screw.
7. After adjusting tangential skew, also adjust the grating.
8. If tangential skew is seriously out of adjustment, carriage stopping and run-away tend to occur in normal mode. In this case,
   a) Switch to test mode,
   b) Shift the pick-up to signal surface center using TRACK ⊕ or ⊖ key.
   c) Press the [RPT] key to close focus.
   d) Press the [FF] key to close the tracking.
   e) Observe RFO in respect to VC, and turn the tangential adjustment screw to obtain a flat waveform at the 11T section.
   f) Repeat the adjustment resuming from step 2.

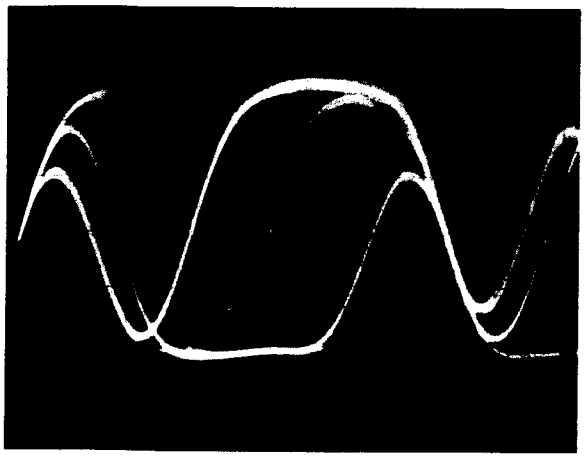

NG Fig. 21

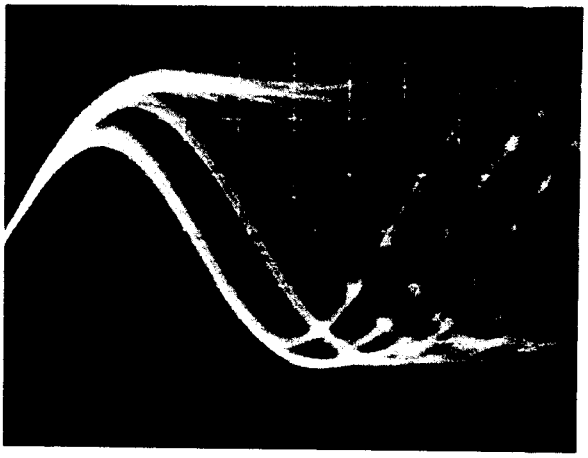

NG Fig. 22

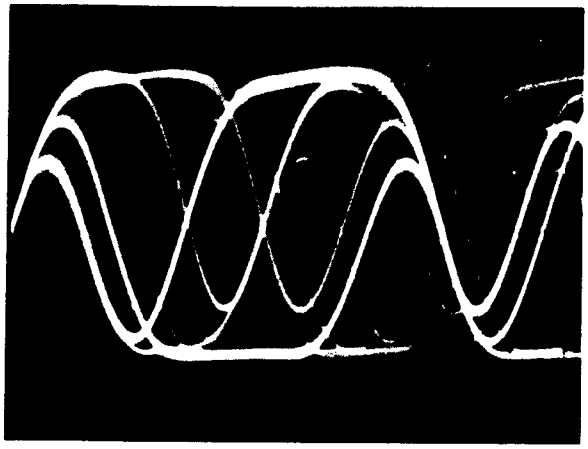

OK Fig. 23

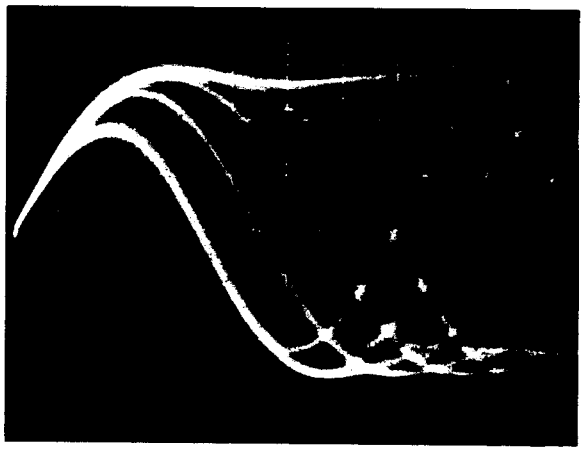

OK Fig. 24

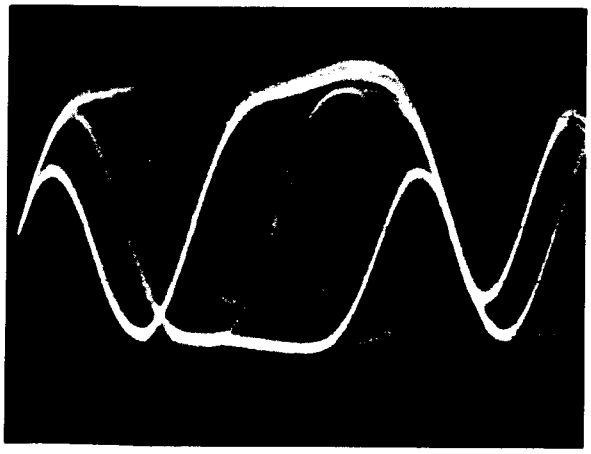

NG Fig. 25

Play tune TNO 7 (TYPE4)

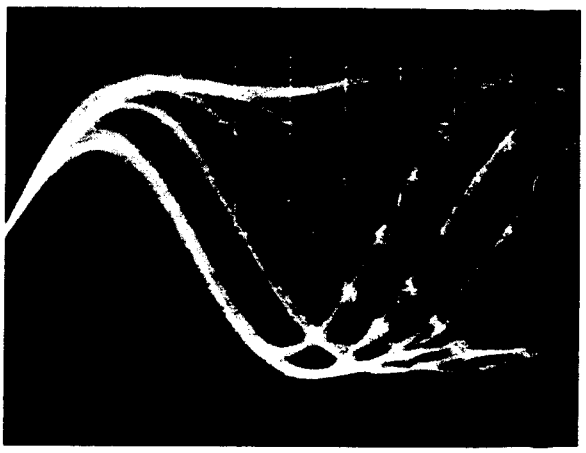

NG Fig. 26

Play tune TNO 12 (TYPE4)

http://www.manualscenter.com

10. 8 Grating Adjustment

● Purpose: The grating may need adjustment in a replaced pick-up assembly.

● Maladjustment symptoms: No disc playback; track jumping

● Measuring equipment/ jigs ● Measuring point ● Test disc and setting ● Adjustment position	• Oscilloscope, clock driver, grating adjustment filter (bandpass filter), AC millivoltmeter, two low-pass filters • TEY, E LPF output, F LPF output • SONY TYPE 4 (or TYPE 3) • Test mode • Pick-up grating adjustment hole

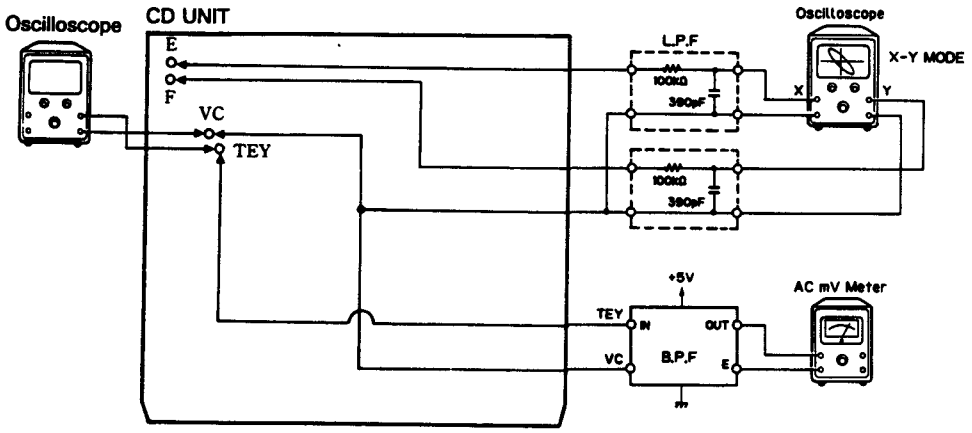

Fig. 30

Adjustment Procedure

1. Connect a low-pass filter (100k, 390p) to test points E, F, and VC as shown in the above diagram.
2. Switch regulator ON in test mode, and load a disc.
3. Press the [RPT] key to close focus.
4. Press the [FF] key to close tracking.
5. Press the [RANDOM] and using the TRACK ⊕ or ⊖ key, move the pick-up to about the center of the signal surface (tune TNO 6). (TYPE 3: TNO 7)
6. Press the [REV] key to open tracking.
7. While monitoring the TEY filter output by AC milli- voltmeter, turn the grating adjustment hole slowly. The AC voltage increases and decreases while turning the screw. Search for the minimum voltage level. (This corresponds to the position where the grating is on a track, and is referred to as the null point.)
8. Then while monitoring TEY by oscilloscope, turn the driver slowly clockwise from the null point (as seen from under the lens) until the first waveform peak amplitude is reached. (See Fig. 32-37)

Adjustment Procedure (without R379 removed)

1. Play tune TNO 12 in normal mode. (TYPE 3: TNO 14)
2. Turn the tangential adjustment screw to obtain a good RF waveform eye pattern. Turn the adjustment screw both clockwise and counterclockwise to points where the eye pattern deteriorates, and take the midway point as the adjustment point. As a general guide, look for an overall clear waveform, and one of the diamond shapes in the eye pattern. The diamond shapes should appear in fine lines at the point of optimum adjustment. Take care not to knock the pick-up with the screwdriver at this stage. (This kind of accident can result in loss of focus.) (See Fig. 27-29)
3. Apply "screw-lock" to the tangential adjustment screw.
4. After adjusting tangential skew, also adjust the grating.

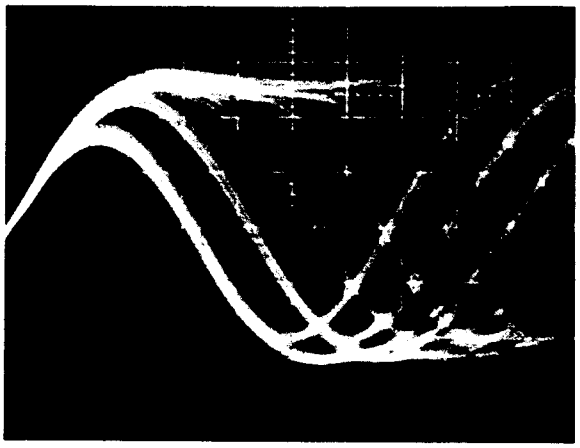

NG Fig. 27

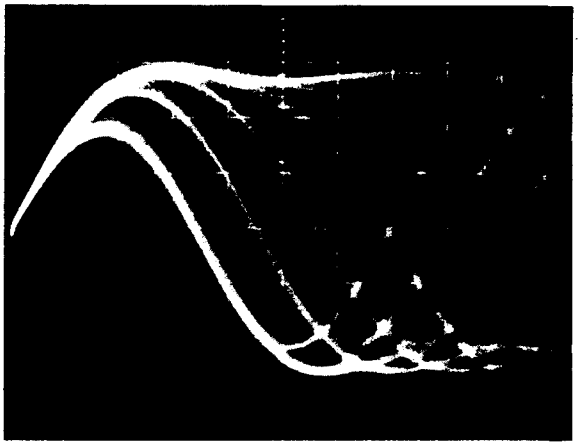

OK Fig. 28

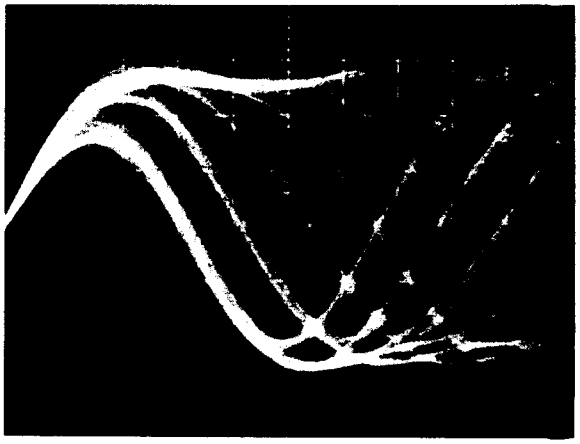

NG Fig. 29

9. With the E low-pass filter output connected to the X axis of the oscilloscope, and the F low-pass filter output connected to the Y axis, apply an input in AC mode and observe the Lissajous figure.
10. Using the driver, adjust the Lissajous figure to a single line (or as close as possible).
11. Switch regulator OFF and remove the filters.

B.P.F.

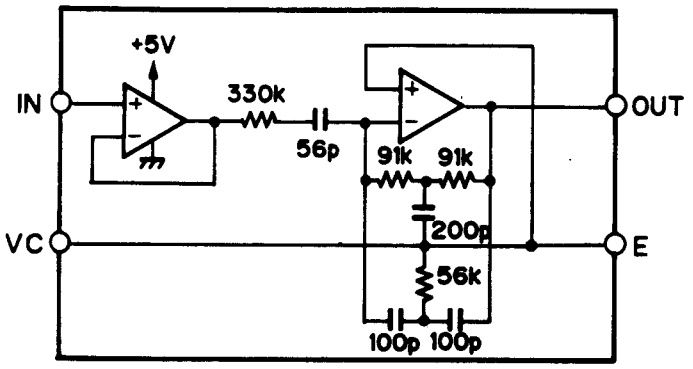

Fig. 31

http://www.manualscenter.com

TEY waveform 10ms/div, 500mV/div

Null Point

Lissajous figure (AC input)
Horizontal axis E 20mV/div
Vertical axis F 20mV/div

Fig. 32

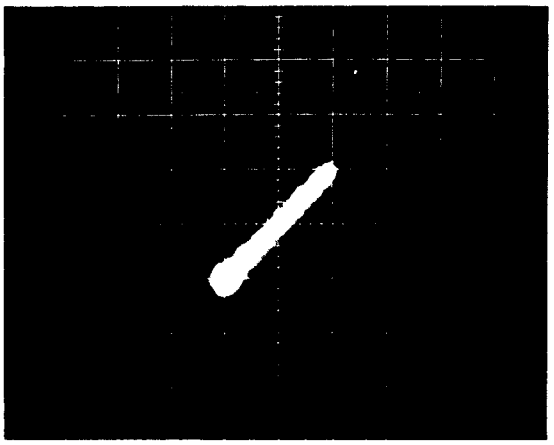

Fig. 33

"Rough" adjustment

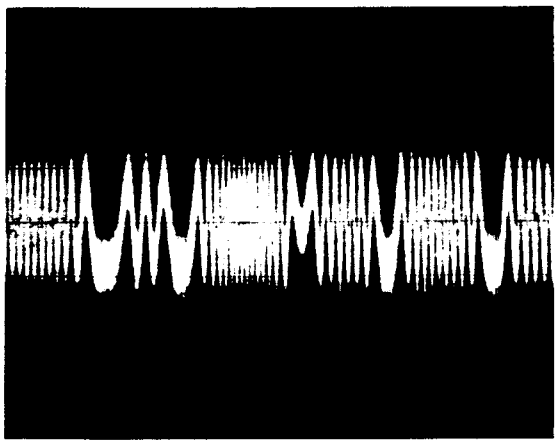

Fig. 34

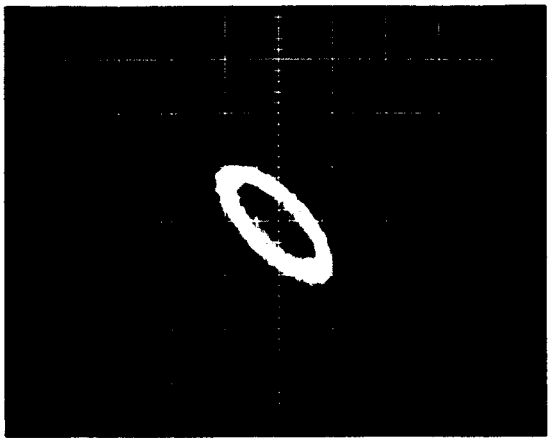

Fig. 35

Final adjustment

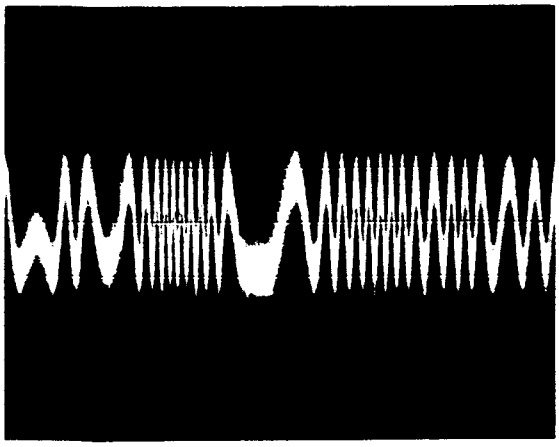

Fig. 36

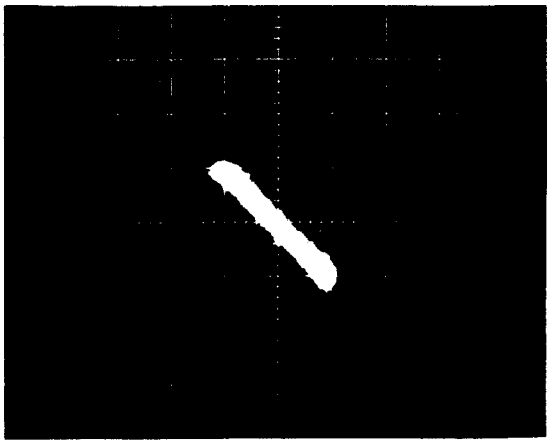

Fig. 37

10.9 Focus Bias Adjustment

● Purpose: To adjust the focus servo bias to an optimum value

● Maladjustment symptoms: Focus closing difficulty, poor playability

● Measuring equipment/ jigs	• Oscilloscope
● Measuring point	• RFO
● Test disc and setting	• SONY TYPE 4 (or TYPE 3) • Normal mode
● Adjustment position	• VR352-1 (FEB)

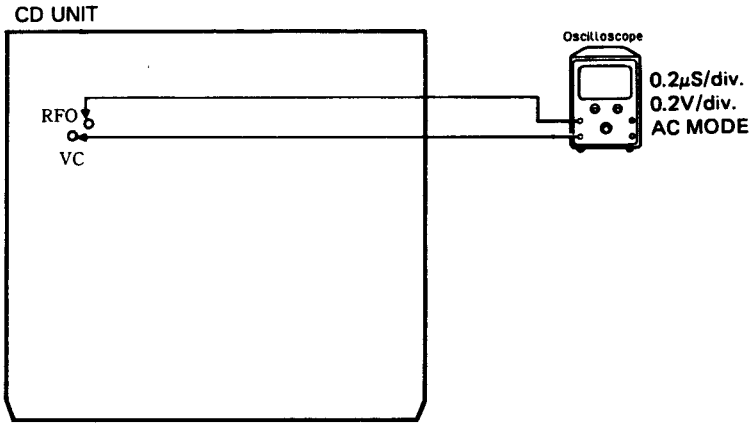

Fig. 38

Adjustment Procedure

1. Play tune TNO 12 in normal mode. (TYPE 3: TNO 14)
2. Observe RFO in respect to VC in the oscilloscope, and adjust VR352-1 (FEB) to obtain maximum RF and optimum eye pattern. (See Fig. 39 and 40)

http://www.manualscenter.com

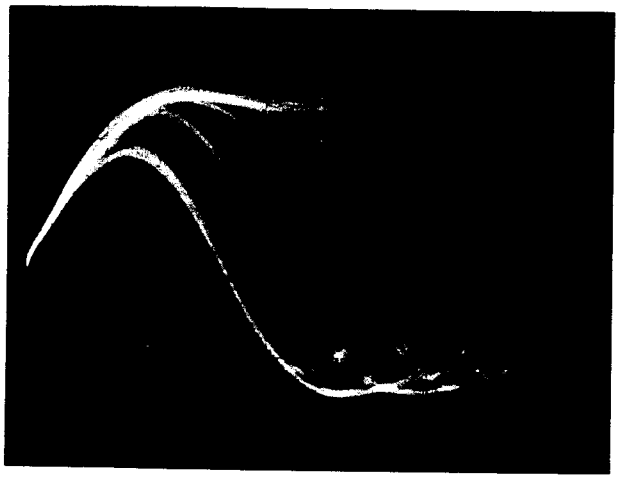

OK Fig. 39

0.2μs/div.
0.2V/div.
AC Mode

Before adjustment Fig. 40

10. 10 Focus Servo Loop Gain Adjustment

● Purpose: To adjust the focus servo loop gain to an optimum value

● Maladjustment symptoms: Poor playability, reduced resistance to vibration, focus closure fails readily

● Measuring equipment/ jigs	• Oscillator, gain adjustment filter, dual meter milli-voltmeter (Same as for CDX-2)
● Measuring point	• FEX, FEY
● Test disc and setting	• SONY TYPE 4 (or TYPE 3) • Normal mode
● Adjustment position	• VR351-3 (FG)

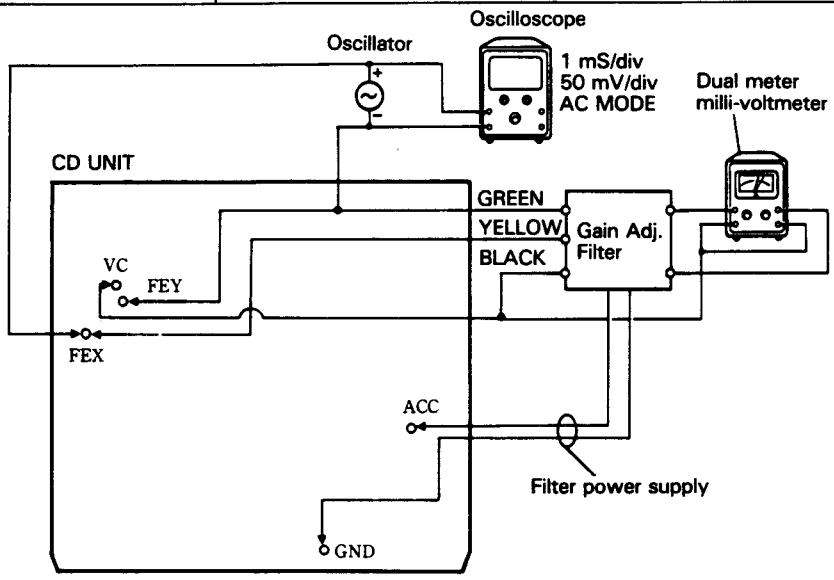

Note: Leave the negative side of the other oscilloscope channel open.

Connect the negative milli-voltmeter lead to VC, and do not connect VC to the power supply ground.

Fig. 41

Adjustment Procedure

1. After checking that the power is OFF, connect the gain adjustment filter and measuring equipment as shown in the above diagram.
2. Play tune TNO 12 in normal mode. (TYPE 3: TNO 14)
3. Set the oscillator to 1kHz, and observe the FEX/FEY output in the oscilloscope. Adjust the oscillator output to obtain a FEX/FEY output of 200mVp-p.
4. Adjust VR351-3 (FG) to obtain a milli-voltmeter difference of 0 ± 0.5dB.

10.11 Tracking Servo Loop Gain Adjustment

● Purpose: To adjust the tracking servo loop gain to an optimum value

● Maladjustment symptoms: Poor playability, reduced resistance to vibration

● Measuring equipment/ jigs	• Oscillator, gain adjustment filter, dual meter milli-voltmeter
● Measuring point	• TEX, TEY
● Test disc and setting	• SONY TYPE 4 (or TYPE 3) • Normal mode
● Adjustment position	• VR351-2 (TG)

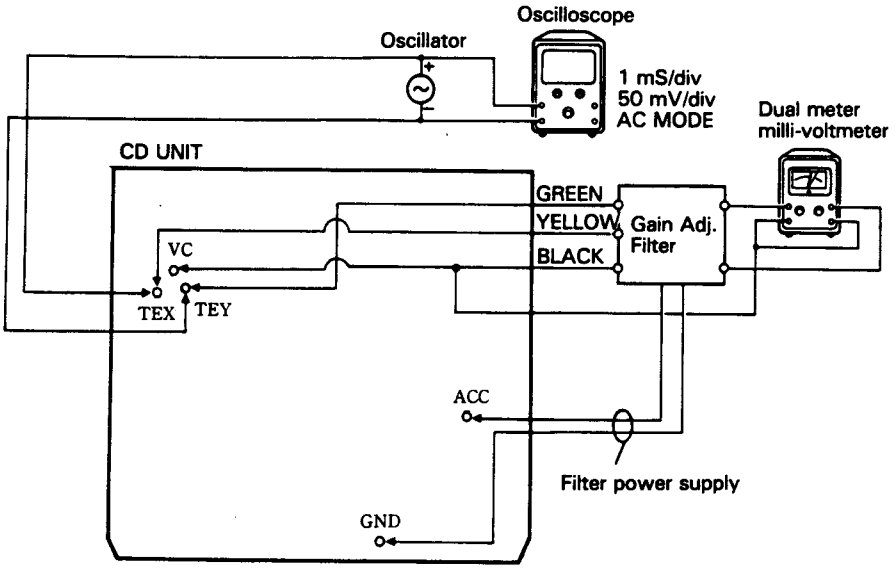

Note: Leave the negative side of the other oscilloscope channel open.

Connect the negative milli-voltmeter lead to VC, and do not connect VC to the power supply ground.

Fig. 42

Adjustment Procedure

1. After checking that the power is OFF, connect the gain adjustment filter and measuring equipment as shown in the above diagram.
2. Play tune TNO 12 in normal mode. (TYPE 3: TNO 14)
3. Set the oscillator to 1.4kHz, and observe the TEX/TEY output in the oscilloscope. Adjust the oscillator output to obtain a TEX/TEY output of 200mVp-p.
4. Adjust VR351-2 (TG) to obtain a milli-voltmeter difference of 0 ± 0.5dB.

10.12 TE Offset Adjustment - II

● Purpose: To adjust the electrical offset of the tracking servo to zero.

● Maladjustment symptoms: Search times too long, carriage run-away

● Measuring equipment/ jigs	• DC voltmeter
● Measuring point	• TAO low-pass filter output
● Test disc and setting	• No disc • Test mode
● Adjustment position	• VR352-2

Adjustment Procedure

Same as for TE offset adjustment - I, but with the DC voltage of the TAO LPF output adjusted to 0 ± 50mV.
The purpose of this additional adjustment is to correct any deviations generated when carrying out the tracking balance and tracking servo loop gain adjustments after completing TE offset adjustment - I.

10.13 Tracking Balance Adjustment - II

● Purpose: To adjust the tracking servo offset to zero.

● Maladjustment symptoms: Search times too long, poor playability, carriage run-away

● Measuring equipment/ jigs	• Oscilloscope
● Measuring point	• TEY low-pass filter output
● Test disc and setting	• SONY TYPE 4 (or TYPE 3) • Test mode
● Adjustment position	• VR351-1

Adjustment Procedure

Steps 1 thru 5 same as tracking balance adjustment-I.

6. Check that the level difference between the positive and negative amplitudes of the TEY signal is within 5% (See Fig. 17-19). If greater than 5%, adjust with VR351-1.
7. If further adjustment was necessary in step 6, repeat TE offset adjustment - II.

AM ADJUSTMENT (UC) *(When 9kHz tuning steps)

	No.	AM SSG(400Hz,30%)		Displayed Frequency (kHz)	Adjusting Point	Adjustment Method (Switch Position)
		Frequency(kHz)	Level(dB)			
Tuning Volt	1			1,620 *(1,602)	T203	DC V Meter:Less than 6V
	2			530 *(531)	——	Verify that DC V Meter is more than 2V
IF	1	1,000 *(999)	20−25	1,000 *(999)	T204,205, 206	mV Meter:Maximum

MW/LW ADJUSTMENT (WG, EW, EI)

	No.	AM SSG(400Hz,30%)		Displayed Frequency (kHz)	Adjusting Point	Adjustment Method (Switch Position)
		Frequency(kHz)	Level(dB)			
Tuning Volt	1	(MW MODE)		1,602	T203	DC V Meter:Less than 6V
	2	(LW MODE)		153	——	Verify that DC V Meter is more than 2V
IF	1	999	20−25	999	T204,205, 206	mV Meter:Maximum

FM ADJUSTMENT (WG, EW, EI) ※ Stereo MOD.: 1kHz,L+R=90% , Pilot=10%

	No.	FM SSG(400Hz,100%)		Displayed Frequency (MHz)	Adjusting Point	Adjustment Method (Switch Position)
		Frequency(MHz)	Level(dB)			
IF	1	98.1	60	98.1	T51	Center Meter:0 (MONO Switch:MONO)
Front End	1			108.0	L5	DC V Meter:6.5±0.2V
	2			87.5	——	Verify that DC V Meter is more than 1.6V
	3	98.1	5−10	98.1	T1	mV Meter:Maximum
MPX	1	98.1 Pilot Only※	60	98.1	VR151	mV Meter:Minimum
	2	98.1※	60	98.1	VR101	mV Meter:Best separation (MONO Switch:AUTO)
ARC	1	98.1※	35	98.1	VR152	mV Meter:Separation 5dB (MONO Switch:AUTO)

http://www.manualscenter.com

10.14 Tuner Section

NOTICE:
Select C1 so that total capacity of 80pF attained from the direction of the receiver jack.
Z: Output impedance of SSG.

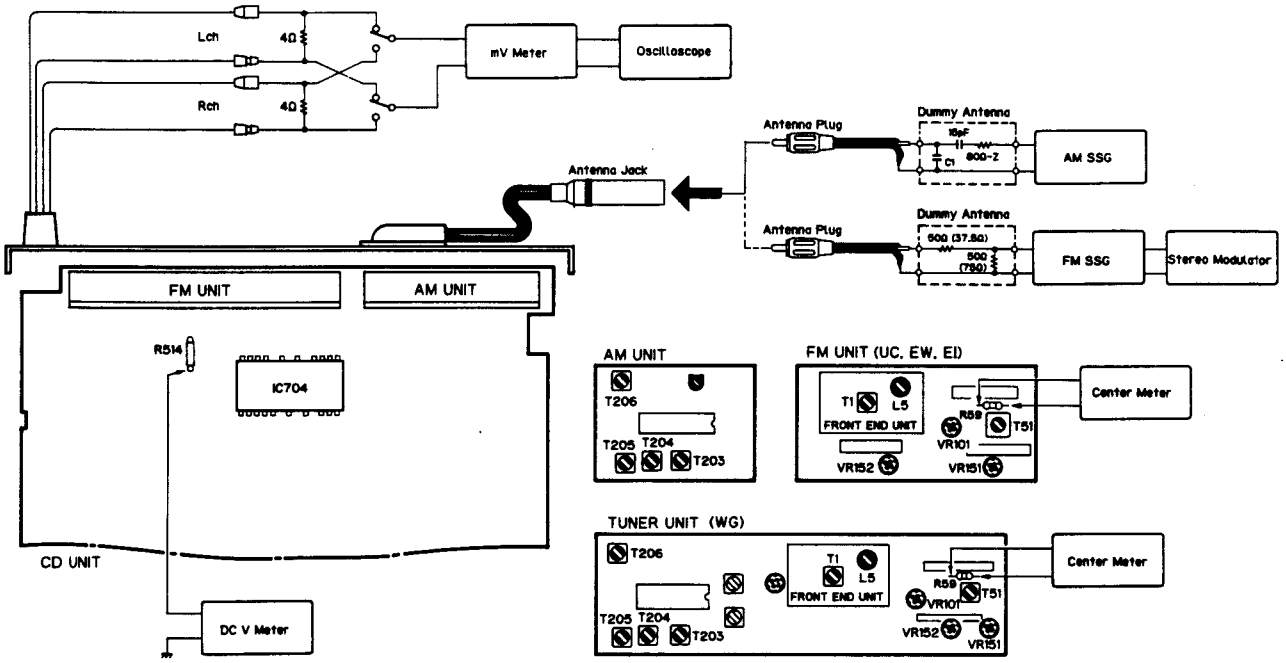

Fig. 43

FM ADJUSTMENT (UC) ※ Stereo MOD.: 1kHz, L+R=90% , Pilot=10%
*(When 50kHz tuning steps)

	No.	FM SSG (400Hz, 100%)		Displayed Frequency (MHz)	Adjusting Point	Adjustment Method (Switch Position)
		Frequency (MHz)	Level (dB)			
IF	1	98.1	60	98.1	T51	Center Meter:0 (MONO Switch:MONO)
Front End	1			107.9 *(108.0)	L5	DC V Meter:6.5±0.2V
	2			87.9 *(87.5)	———	Verify that DC V Meter is more than 1.6V
	3	98.1	5−10	98.1	T1	mV Meter:Maximum
MPX	1	98.1 Pilot Only※	60	98.1	VR151	mV Meter:Minimum
	2	98.1※	60	98.1	VR101	mV Meter:Best separation (MONO Switch:AUTO)
ARC	1	98.1※	35	98.1	VR152	mV Meter:Separation 5dB (MONO Switch:AUTO)

Pin No.	Pin Name	I/O	Function and Operation
73	V_{DD}	—	Power supply (+5V)
74	DA12	Output	RAOV output
75	DA13	Output	C4LR output
76	DA14	Output	$\overline{\text{C21O}}$ output
77	DA15	Output	C21O output
78	DA16	Output	DATA output
79	WDCK	Output	Strobe signal output (176.4kHz)
80	LRCK	Output	Strobe signal output (88.2kHz)

Note:

C1F1: C1F2: C1 decoding error correction status monitor output

C2F1: C2F2: C2 decoding error correction status monitor output

C2FL: Corrected status output - "H" if C2 system currently being corrected cannot be corrected

C2PO: C2 pointer indication output - synchronized with audio data output

RFCK: Read frame clock output - crystal oscillator 7.35kHz

WFCK: Write frame clock output - f = 7.35kHz when crystal oscillator is locked

$\overline{\text{PLCK}}$: VCO/2 output - f = 4.3218MHz when EFM signal is locked

UGFS: Unprotected frame synchronizing pattern output

GTOP: Frame synchronization protection status indicator output

RAOV: ±4 frame jitter absorption RAM overflow and underflow indicator output

C4LR: Strobe signal - 176.4kHz

$\overline{\text{C21O}}$: C21O inverting output

C21O: Bit clock output - 2.1168MHz

DATA: Audio signal serial data output

*IC703: μPD6355G

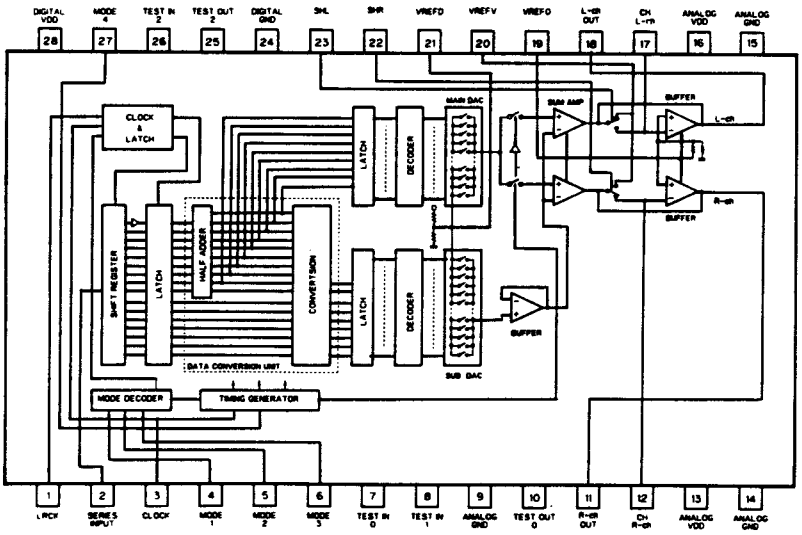

● Pin Functions (μPD6355G)

Pin No.	Pin Name	I/O	Function and Operation
1	LRCK	Input	Input data left/right discriminator signal input pin "L" = Left, "H" = Right
2	SI	Input	Serial data input pin
3	CLK	Input	Serial input data read clock input pin
4-6	M1-M3	Input	Input data mode selector pin

Pin No.	Pin Name	I/O	Function and Operation
36	DB02	Input/Output	External RAM data pin - DATA2
37	DB01	Input/Output	External RAM data pin - DATA1 (LSB)
38	RA01	Output	External RAM address output - ADDR01 (LSB)
39	RA02	Output	External RAM address output - ADDR02
40	RA03	Output	External RAM address output - ADDR03
41	RA04	Output	External RAM address output - ADDR04
42	RA05	Output	External RAM address output - ADDR05
43	RA06	Output	External RAM address output - ADDR06
44	RA07	Output	External RAM address output - ADDR07
45	RA08	Output	External RAM address output - ADDR08
46	RA09	Output	External RAM address output - ADDR09
47	RA10	Output	External RAM address output - ADDR010
48	RA11	Output	External RAM address output - ADDR011 (MSB)
49	RAWE	Output	External RAM write enable signal output (active "L")
50	RACS	Output	External RAM chip select signal output (active "L")
51	C4M	Output	X'tal frequency division output (f = 4.2336MHz)
52	V_{SS}	–	Ground (0V)
53	XTAI	Input	Crystal oscillator input (f = 8.4672MHz)
54	XTAO	Output	Crystal oscillator output (f = 8.4672MHz)
55	MD1	Input	Mode selector input 1
56	MD2	Input	Mode selector input 2
57	MD3	Input	Mode selector input 3
58	SLOB	Input	Audio data output code selector input - 2's complement output if "L", offset binary output if "H"
59	PSSL	Input	Audio data output mode selector input - serial output if "L", parallel output if "H"
60	APTR	Output	Aperture correction control output - "H" when right channel
61	APTL	Output	Aperture correction control output - "L" when left channel
62	DA01	Output	C1F1 output
63	DA02	Output	C1F2 output
64	DA03	Output	C2F1 output
65	DA04	Output	C2F2 output
66	DA05	Output	C2FL output
67	DA06	Output	C2PO output
68	DA07	Output	RFCK output
69	DA08	Output	WFCK output
70	DA09	Output	$\overline{\text{PLCK}}$ output
71	DA10	Output	UGFS output
72	DA11	Output	GTOP output

Pin No.	Pin Name	I/O	Function and Operation
7,8	TI_0, TI_1	Input	Test pins
9	A·GND		Analog stage ground pin
10	TOO	Output	Test pin
11	ROUT	Output	Right channel analog signal output pin
12	CHR	Output	Right channel analog signal sample hold capacitor pin
13	A·VDD		Analog stage power supply pin
14,15	A·GND		Analog stage ground pins
16	A·VDD		Analog stage power supply pin
17	CHL	Output	Left channel analog signal sample hold capacitor pin
18	LOUT	Output	Left channel analog signal output pin
19	VREFO		Operation amplifier reference connection
20	VREFV		Connection to AGND via capacitor
21	VREFD		Connection to resistance ladder
22	SHR	Input	Right channel analog output sample hold timing signal Active high
23	SHL	Input	Left channel analog output sample hold timing signal Active high
24	D·GND		Logic stage ground pin
25	TO2	Output	Test pin
26	TI2	Input	Test pin
27	M4	Input	Internal logic clock selection which determines whether input from CLK pin is to be divided or not "H": No division, "L": Divide by 2
28	D·VDD		Logic stage power supply pin

*IC702 : CXK5816M-15L

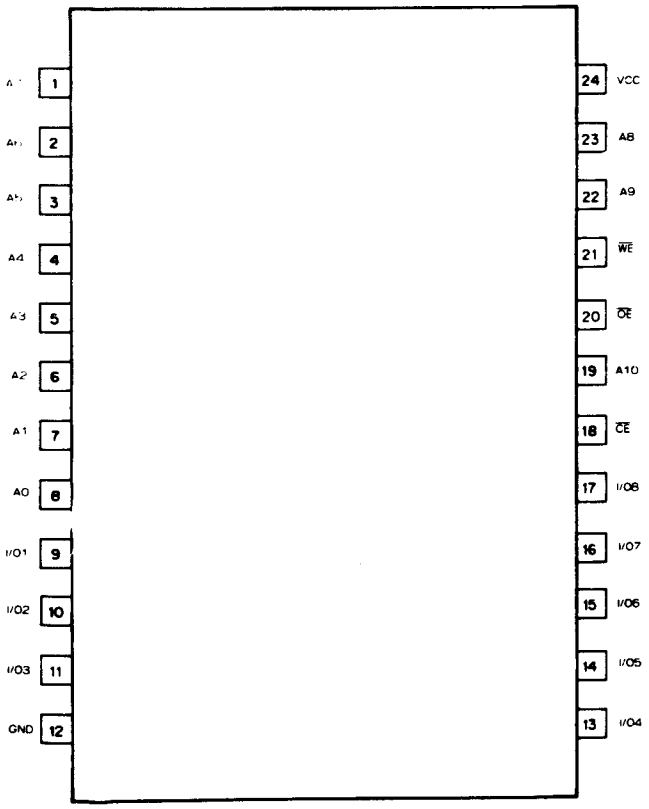

IC851: M5228FP

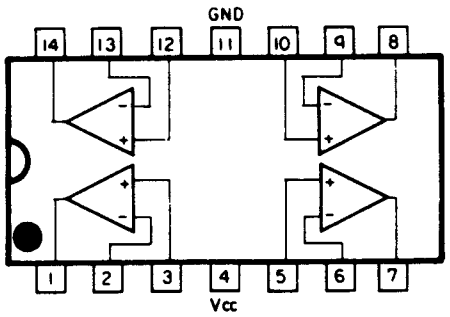

IC882 : PDG011

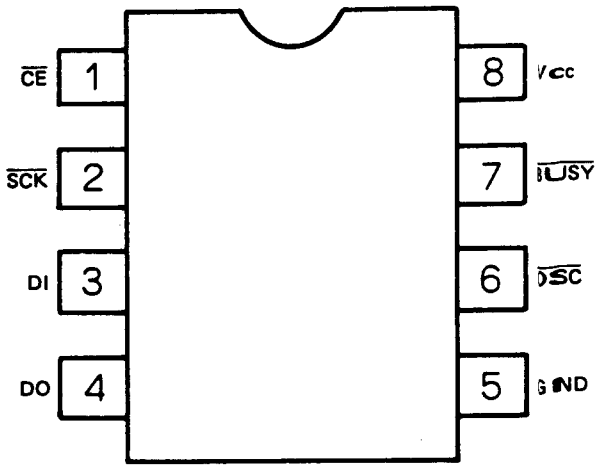

http://www.manualscenter.com

*IC751 : PD4136A

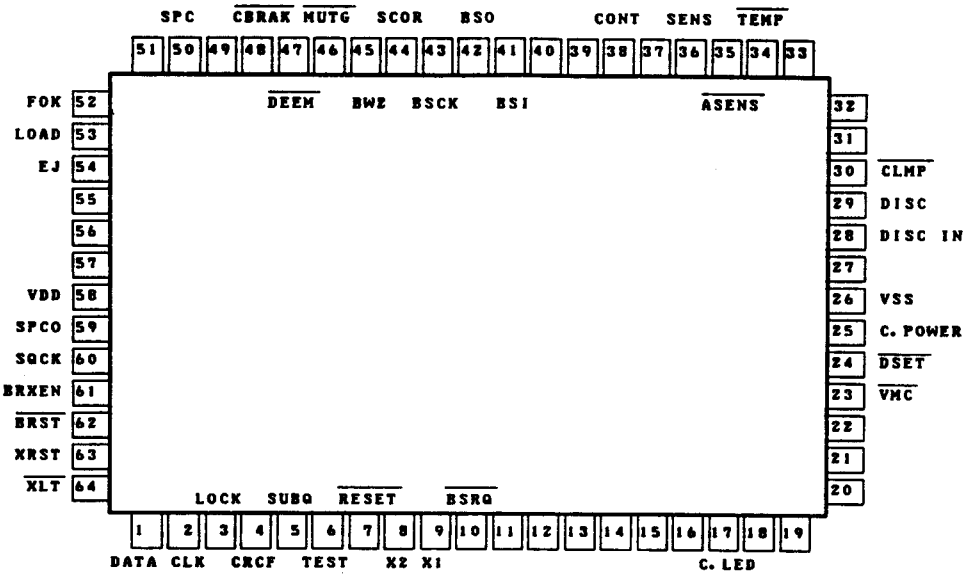

● Pin Functions (PD4136A)

Pin No.	Pin Name	I/O	Function and Operation
1	DATA	CMOS IN	Serial data output
2	CLK	CMOS OUT	Serial data clock output
3	LOCK	CMOS IN	Spindle lock monitor "H"=Lock
4	CRCF	CMOS IN	CRC check result input "H"=CRC OK
5	SUBQ	CMOS IN	Sub-code data input
6	TEST	CMOS IN	Test input
7	$\overline{\text{RESET}}$	CMOS IN	Reset input
8	X2	CMOS OUT	Oscillator output
9	X1	CMOS IN	Oscillator input
10	$\overline{\text{BSRQ}}$	CMOS OUT	Service request line "L"=Request
17	C. LED	CMOS OUT	Output for LED
23	$\overline{\text{VMC}}$	CMOS OUT	Loading power supply control
24	$\overline{\text{DSET}}$	CMOS OUT	Disc set LED control
25	C.POWER	CMOS OUT	Regulator ON/OFF control "H"=Regulator ON
26	VSS	—	Ground
28	DISC IN	CMOS IN	Door switch input "H"=Door open

18. CONNECTION DIAGRAM (CD MECHANISM)

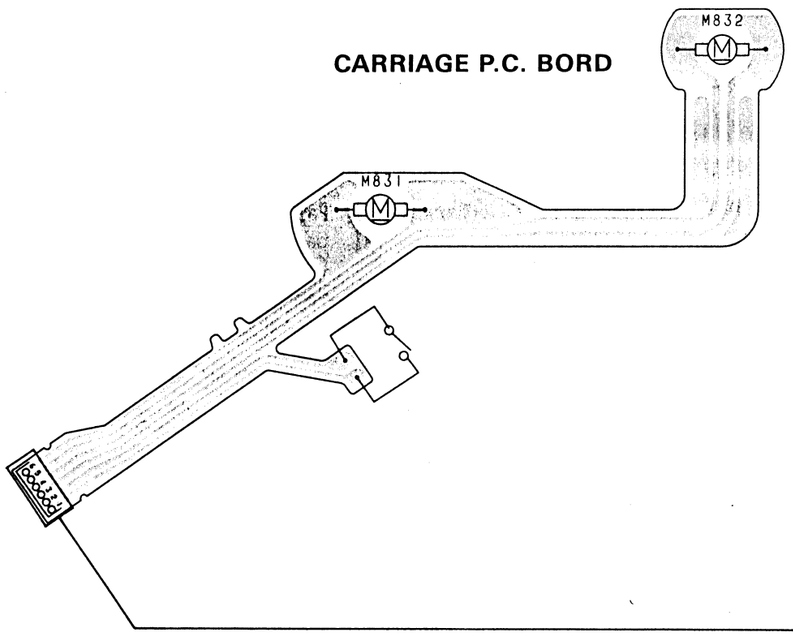

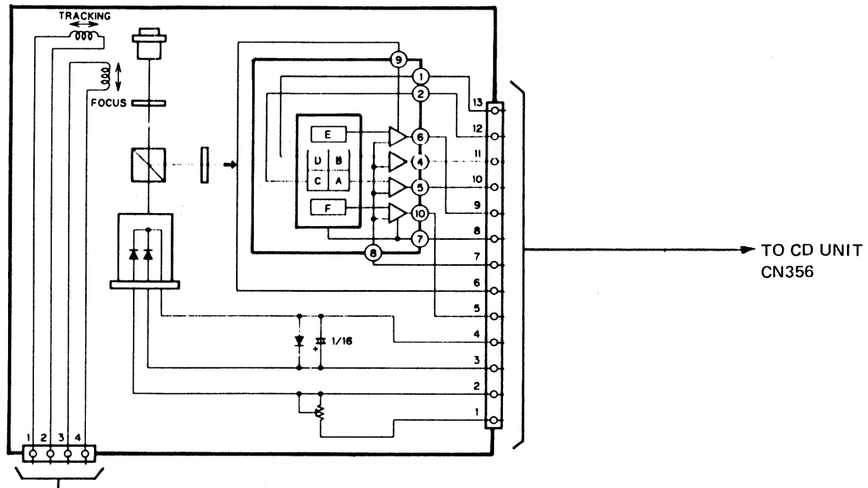

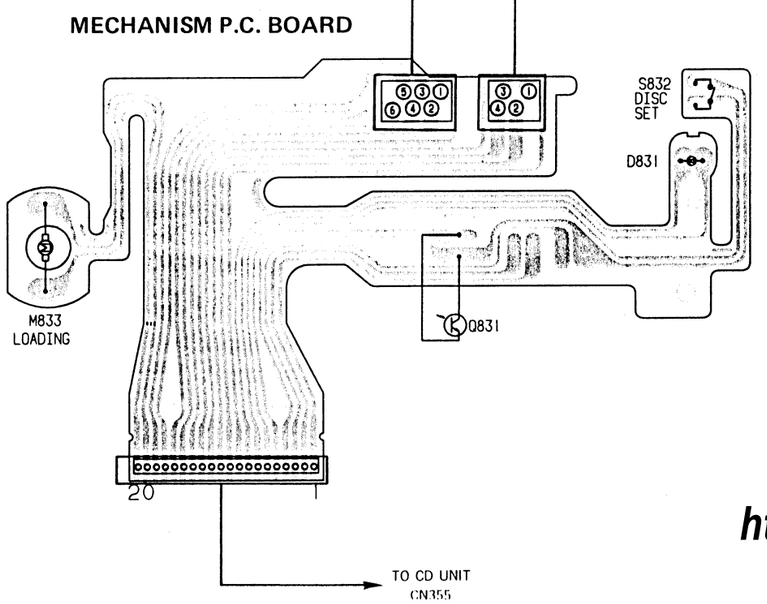

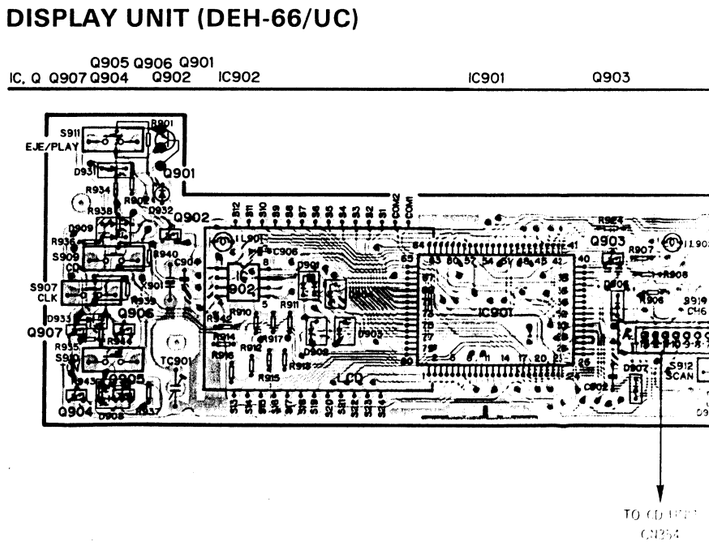

http://www.manualscenter.com

DISPLAY UNIT (DEH-66 SDK/WG)

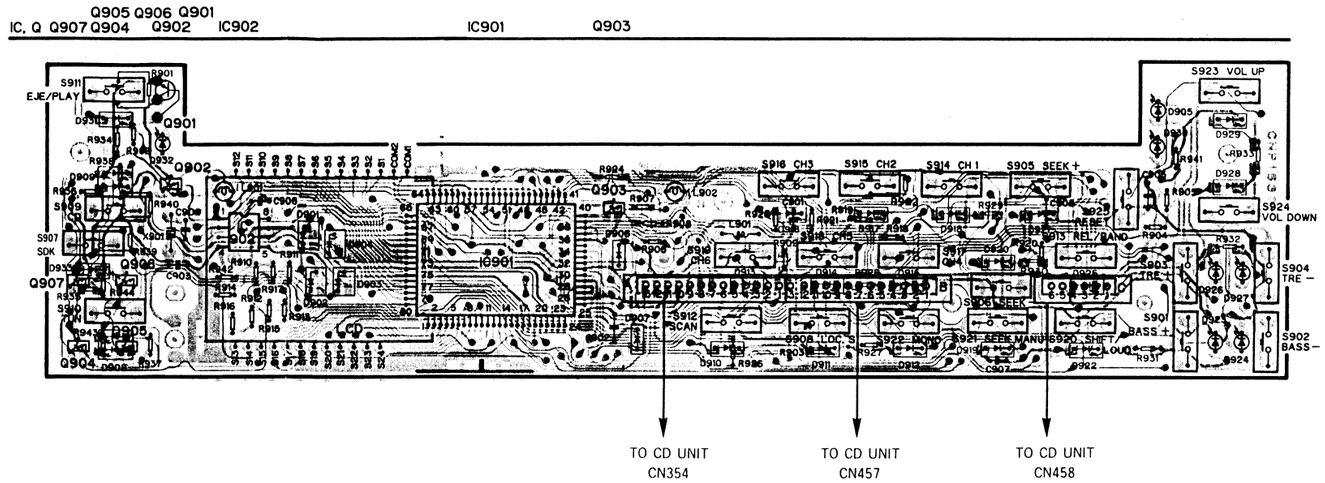

DISPLAY UNIT (DEH-66/EW, EI)

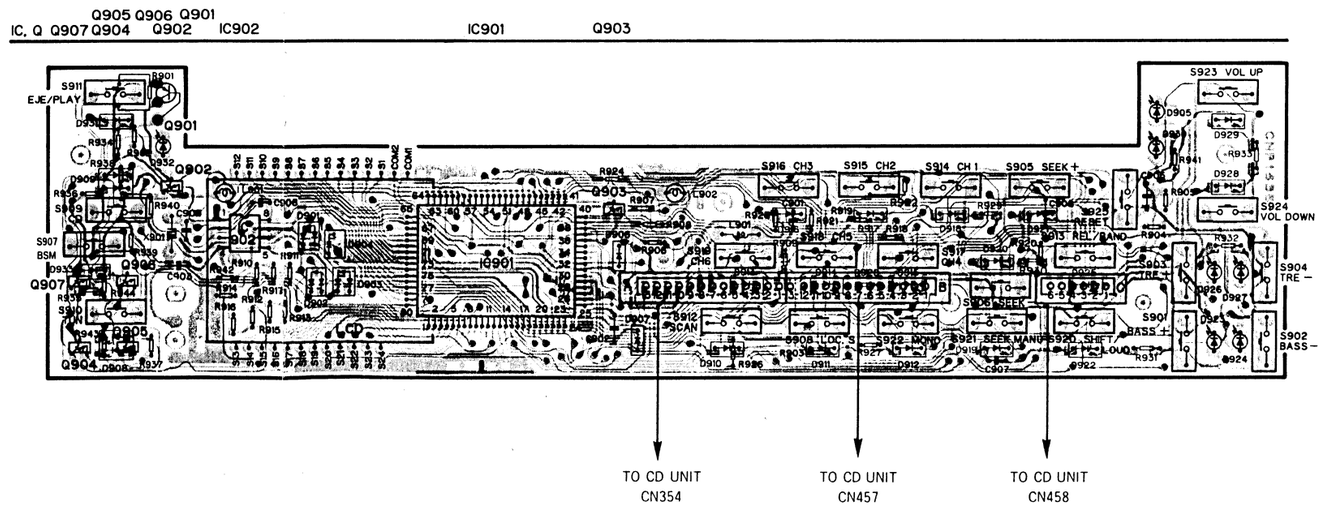

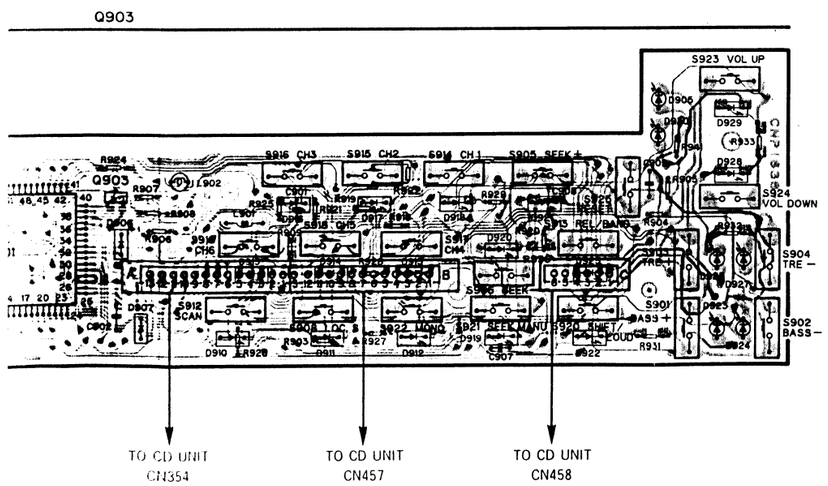

http://www.manualscenter.com

Fig. 51

17. SCHEMATIC CIRCUIT DIAGRAM (CD MECHANISM)

http://www.manualscenter.com

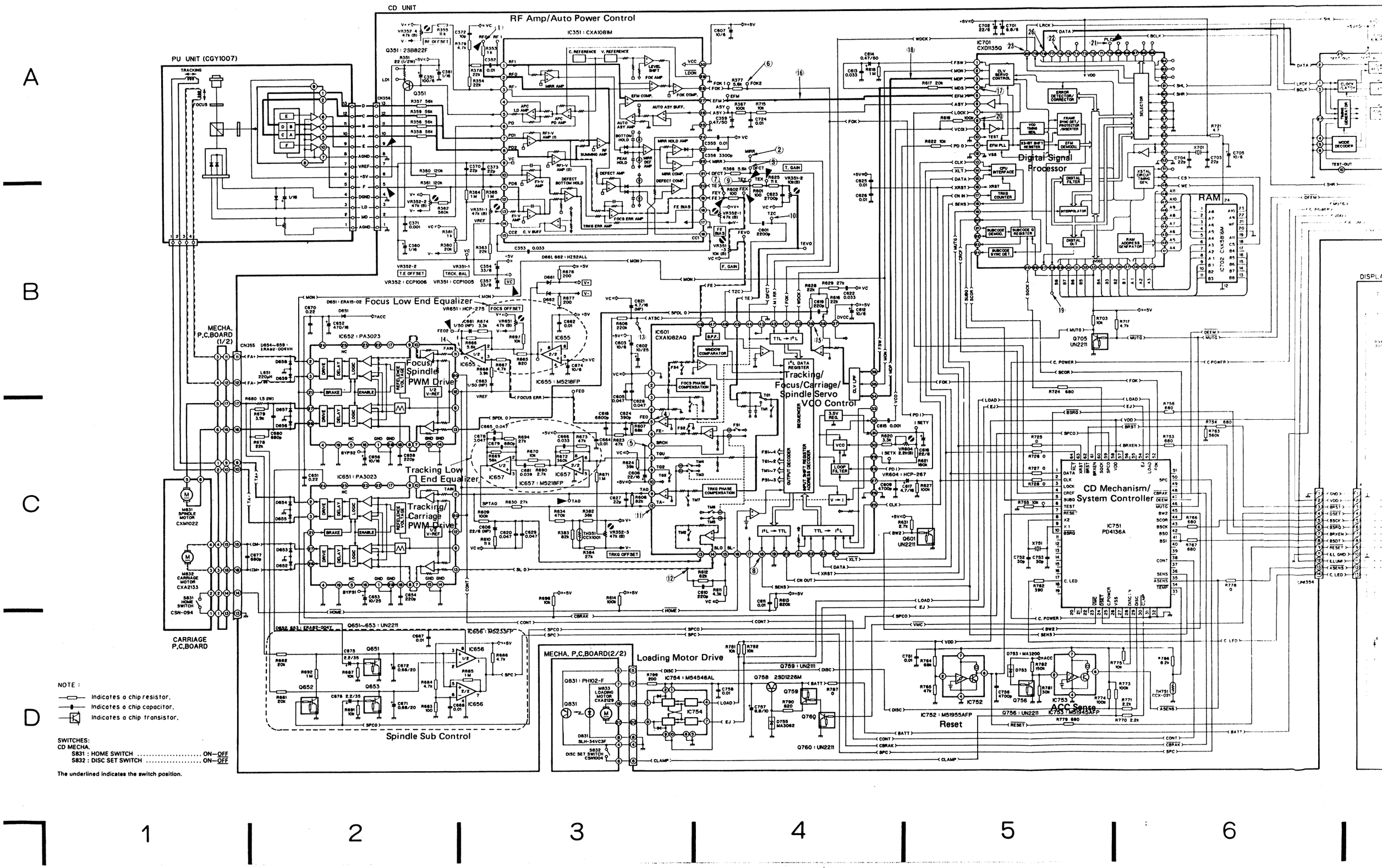

http://www.manualscenter.com

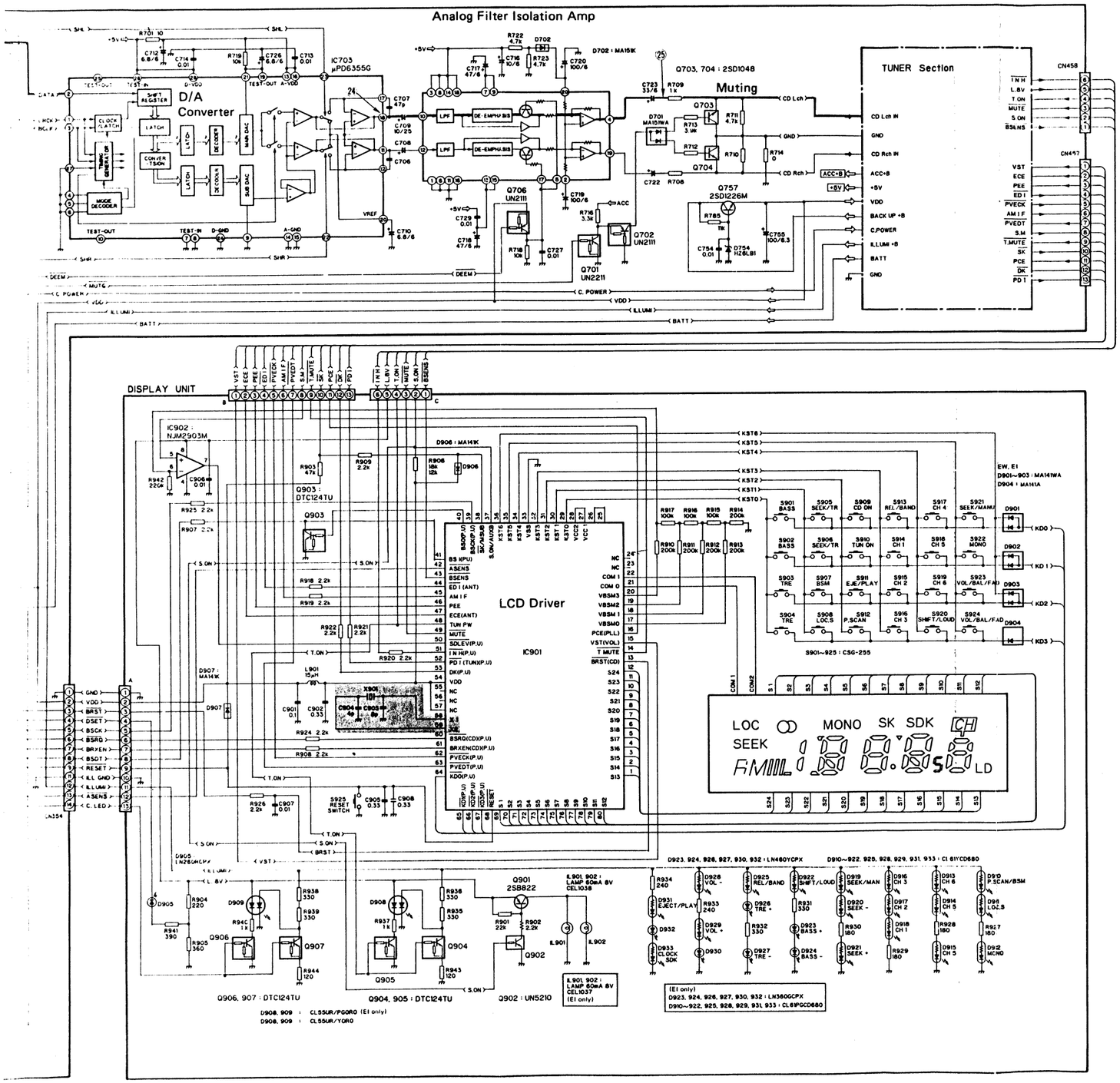

UC

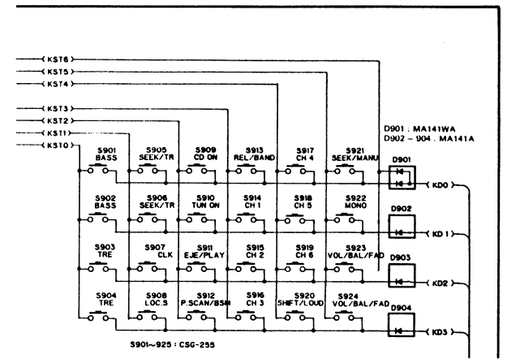

WG

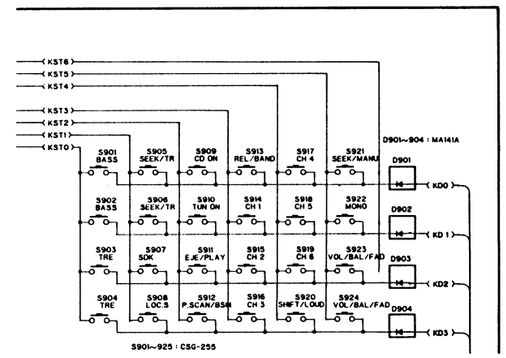

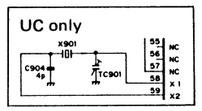

	UC	WG	EW	EI
LCD	CWW1161	CWW1203	CWW1203	CWW1162
IC901	PD4139A	PD4153A	PD4139A	PD4139A

Signal Route
Focus Servo Line
Spindle Servo Line
Tracking Servo Line
Carriage Servo Line

Fig. 50

16. CONNECTION DIAGRAM (TUNER DEH-66/EW, EI)

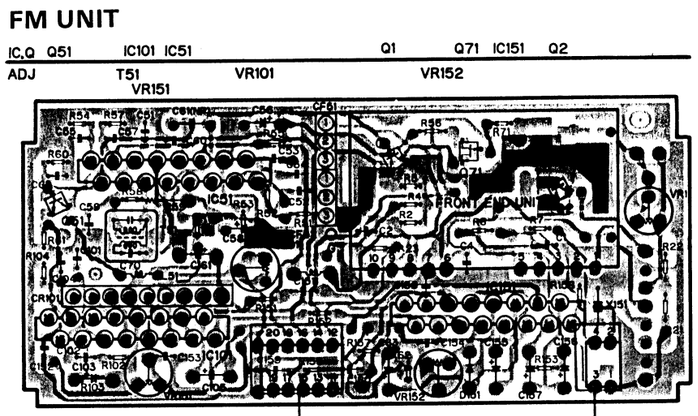

AM UNIT : IC201

1	2	3	4	5	6	7	8	9	10
3.4V	3.4V	0V				6.9V			
11	12	13	14	15	16	17	18	19	20
0V	2.3V	2.3V	8.5V	3.6V	3.6V	4.6V	4.0V	5.3V	4.8V
21	22	23	24	25	26	27	28	29	30
8.2V	8.2V	8.5V	3.3V	0V	8.2V	8.2V	5.4V	5.4V	

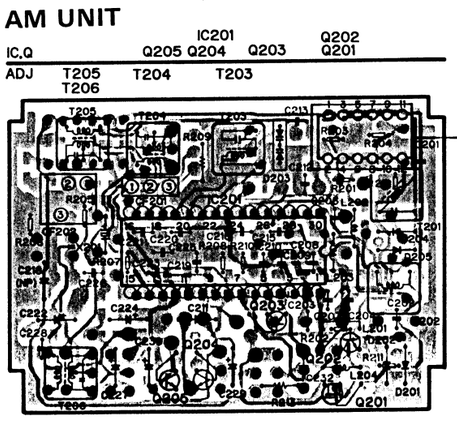

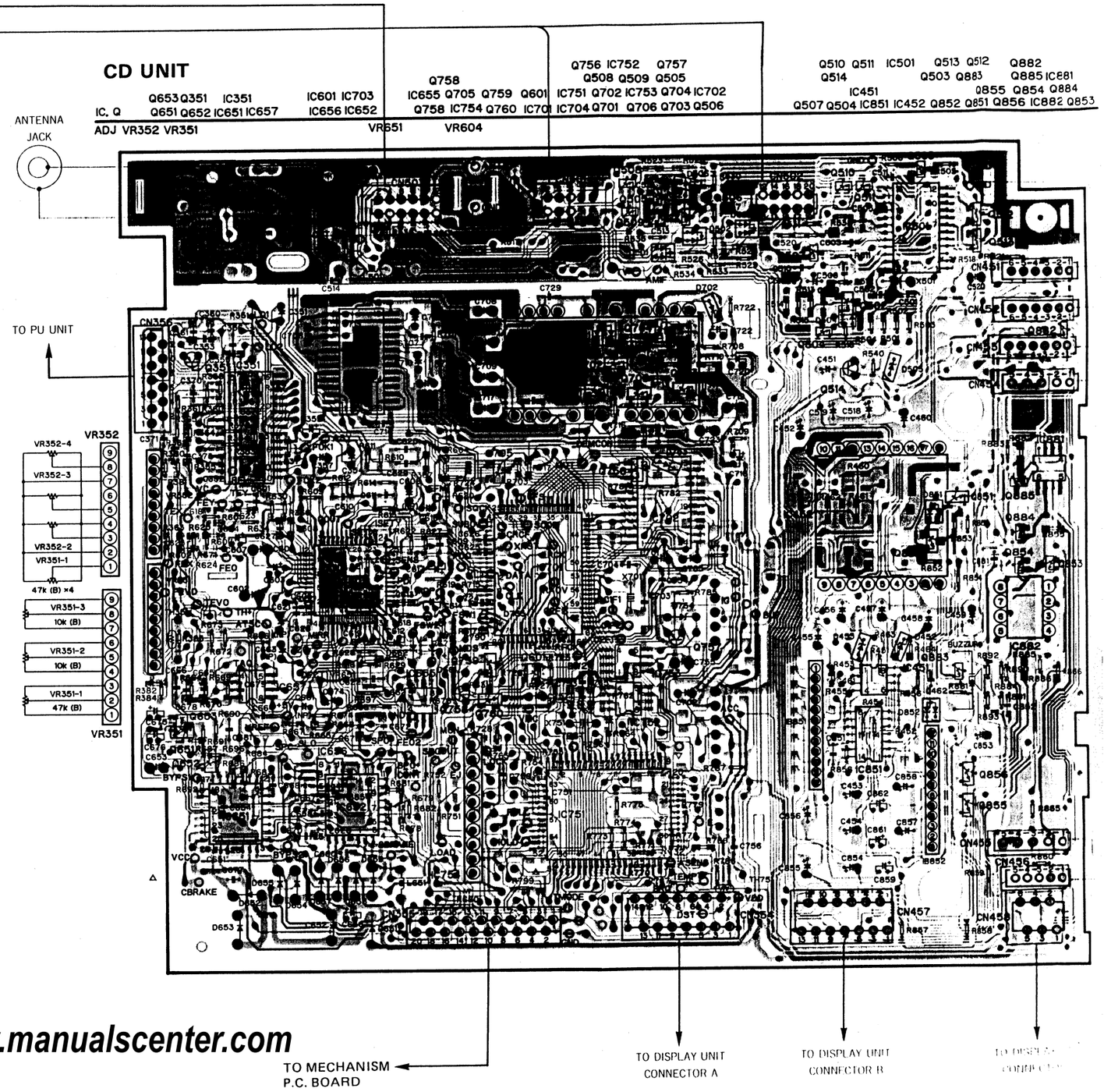

http://www.manualscenter.com

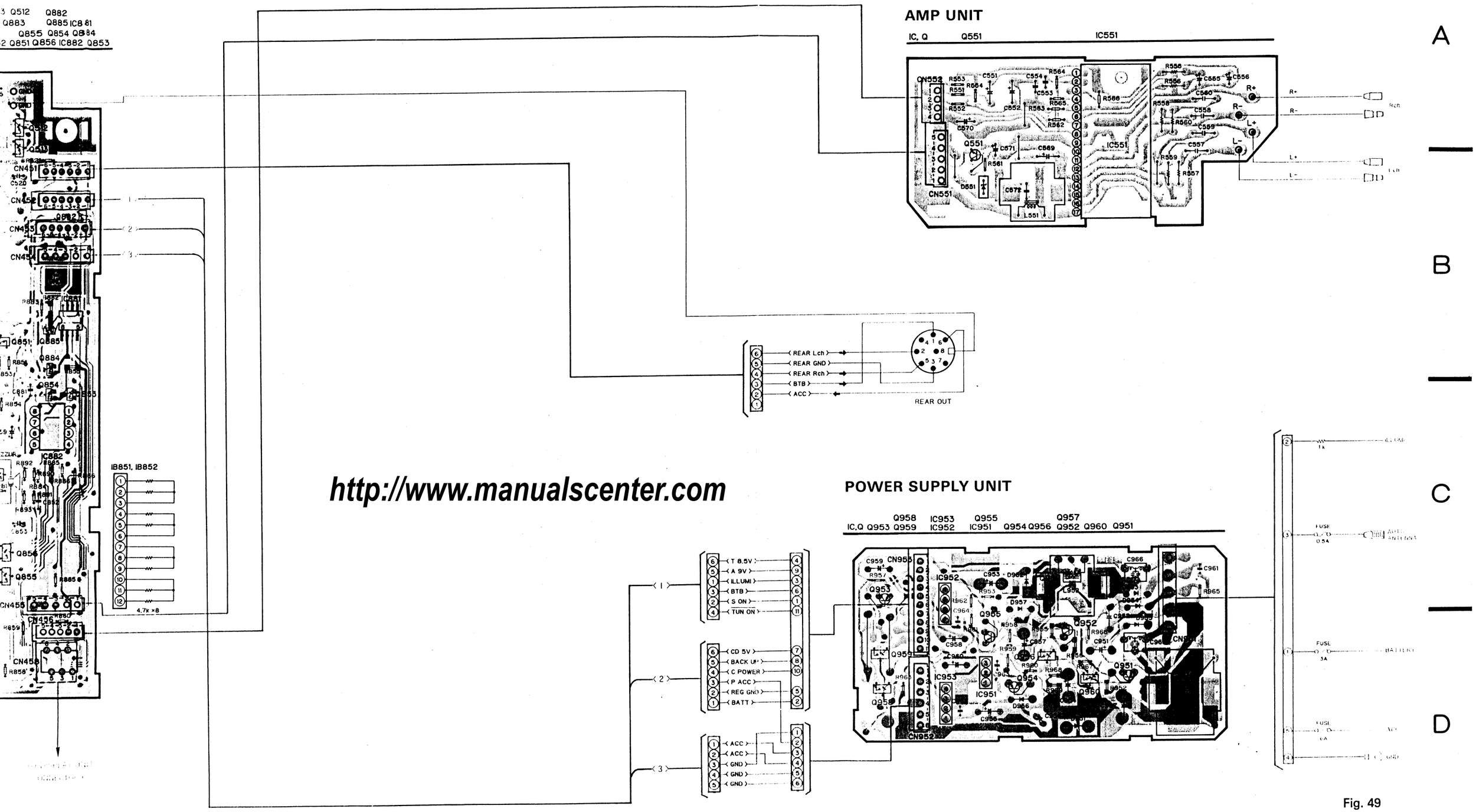

http://www.manualscenter.com

Fig. 49

15. SCHEMATIC CIRCUIT DIAGRAM (TUNER DEH-66/EW, EI)

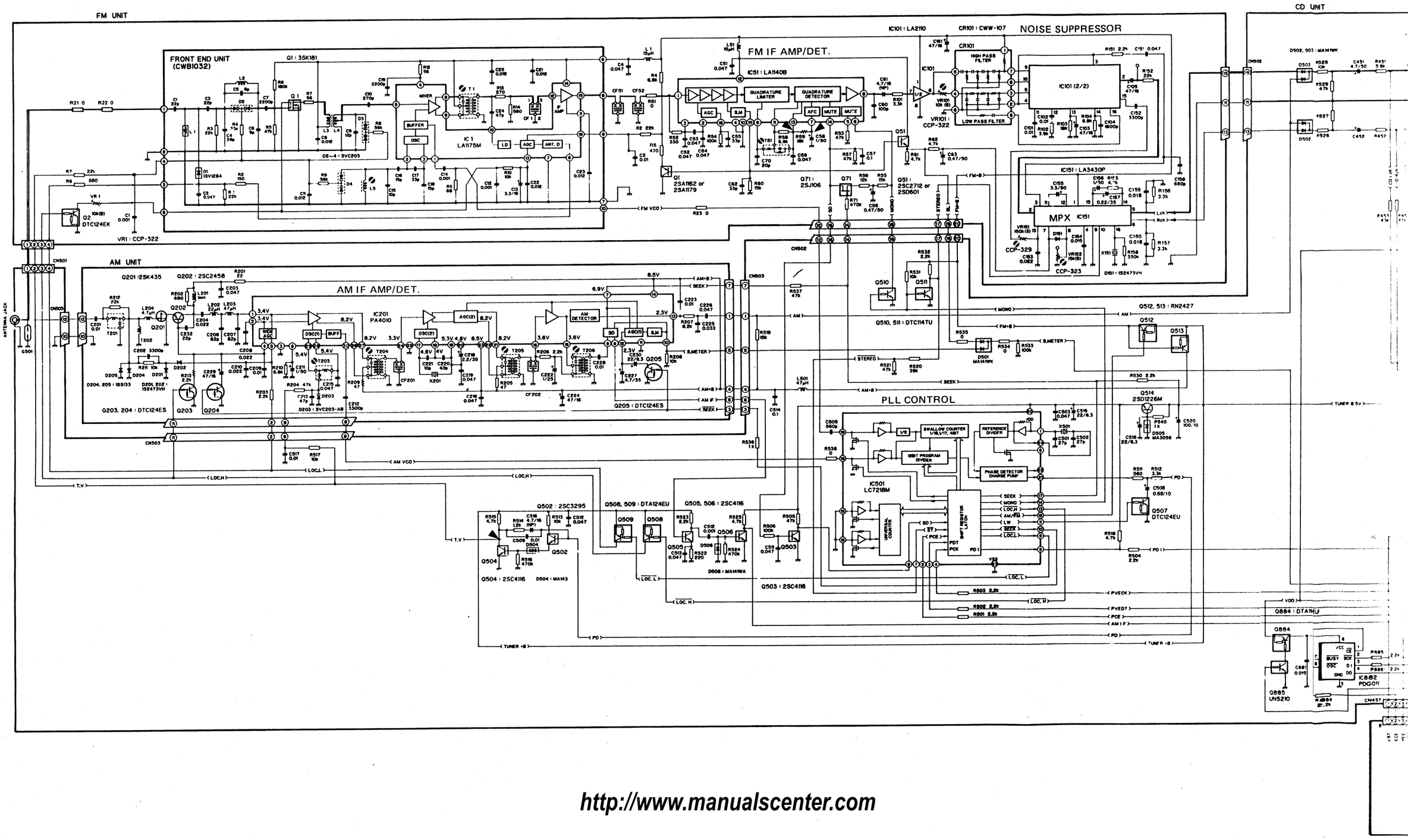

http://www.manualscenter.com

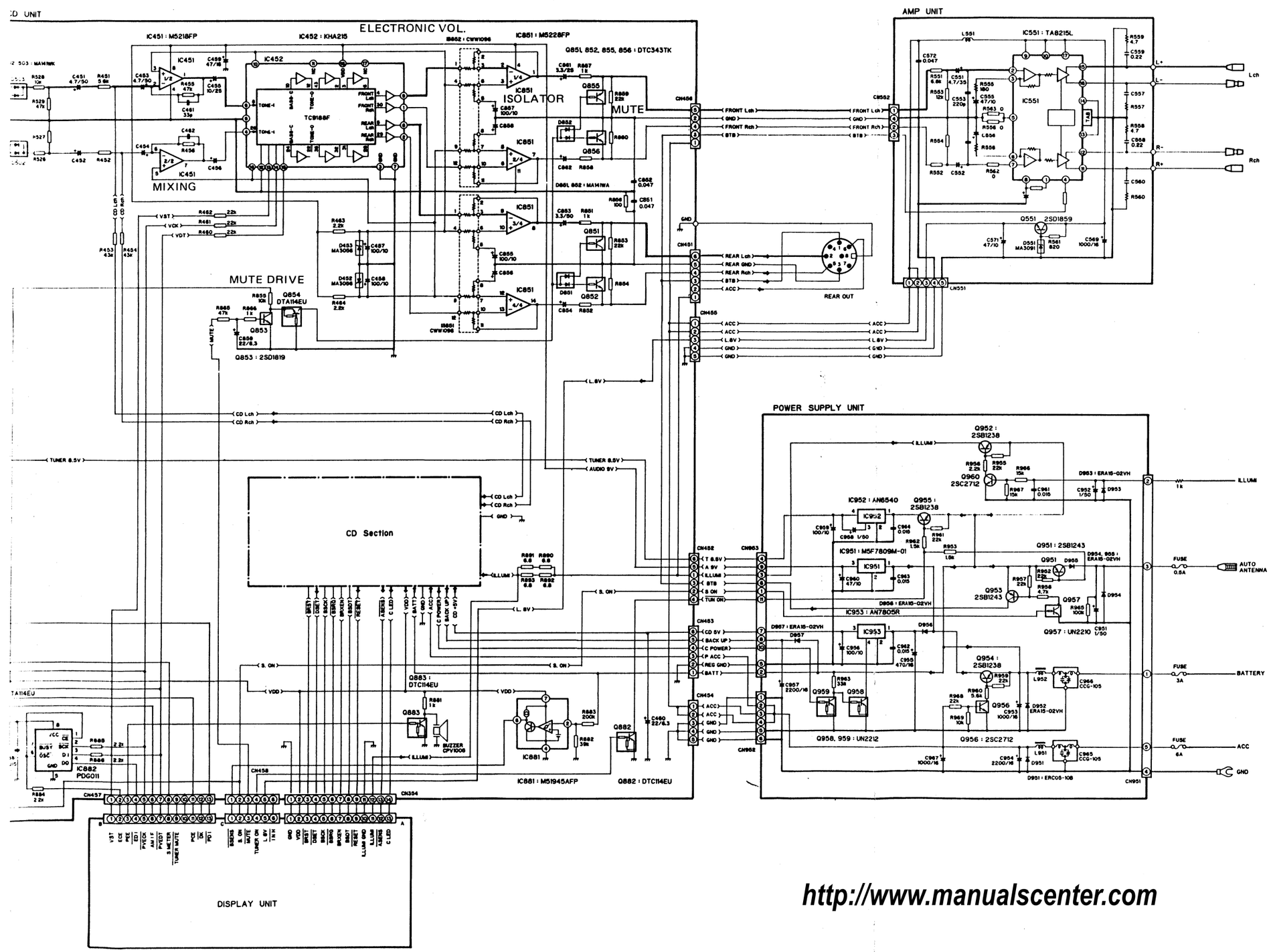

http://www.manualscenter.com

Fig. 48

14. CONNECTION DIAGRAM (TUNER DEH-66SDK/WG)

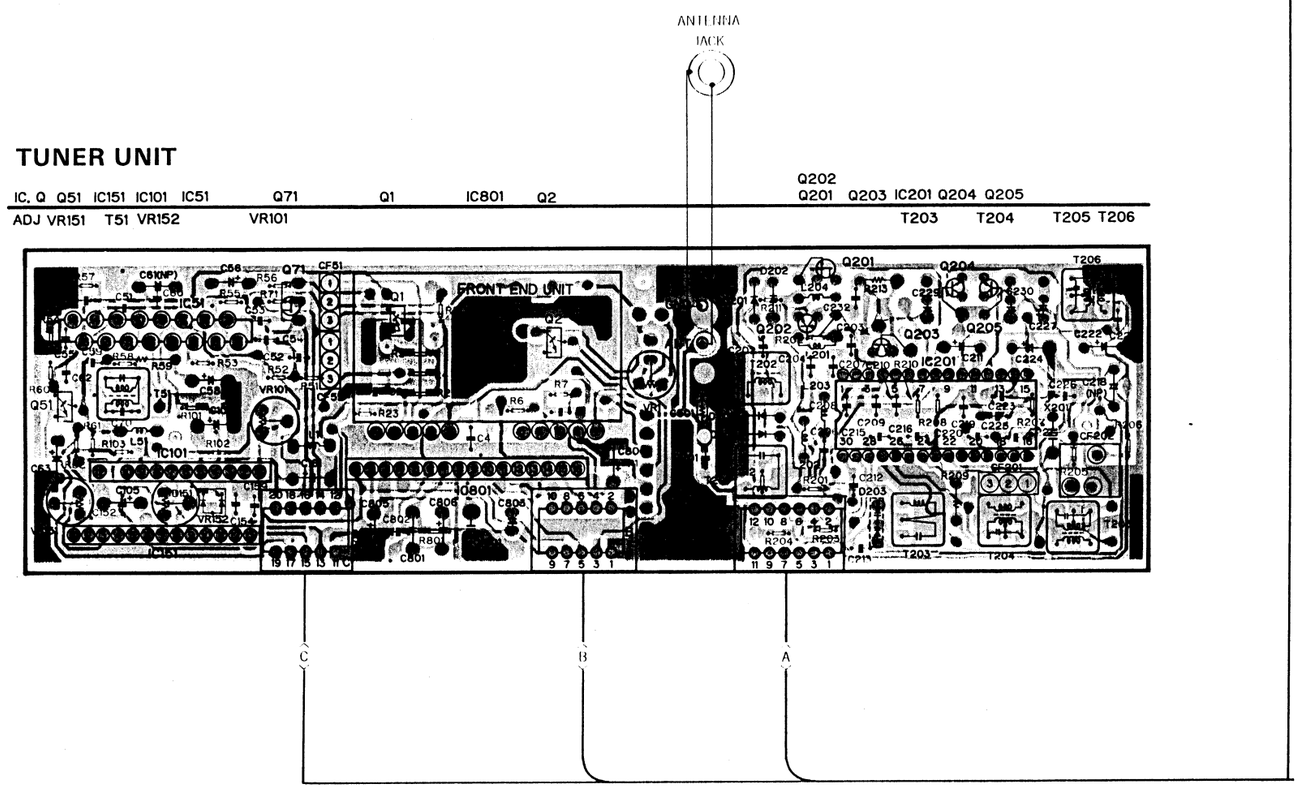

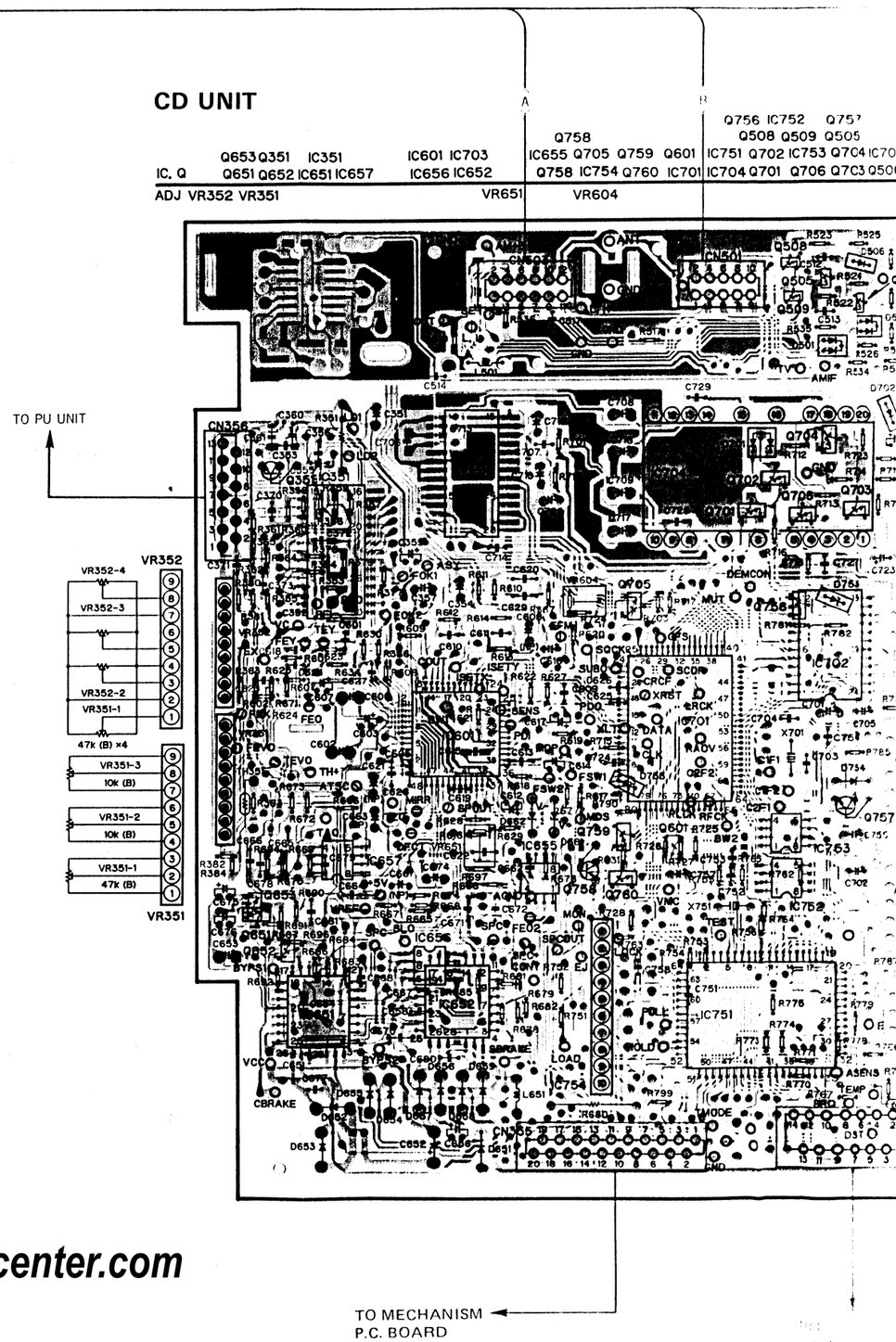

AM UNIT : IC201

1	2	3	4	5	6	7	8	9	10
3.4V	3.4V	0V				6.9V			
11	12	13	14	15	16	17	18	19	20
0V	2.3V	2.3V	8.5V	3.6V	3.6V	4.6V	4.0V	5.3V	4.8V
21	22	23	24	25	26	27	28	29	30
8.2V	8.2V	8.5V	3.3V	0V	8.2V	8.2V	5.4V	5.4V	2.7V

http://www.manualscenter.com

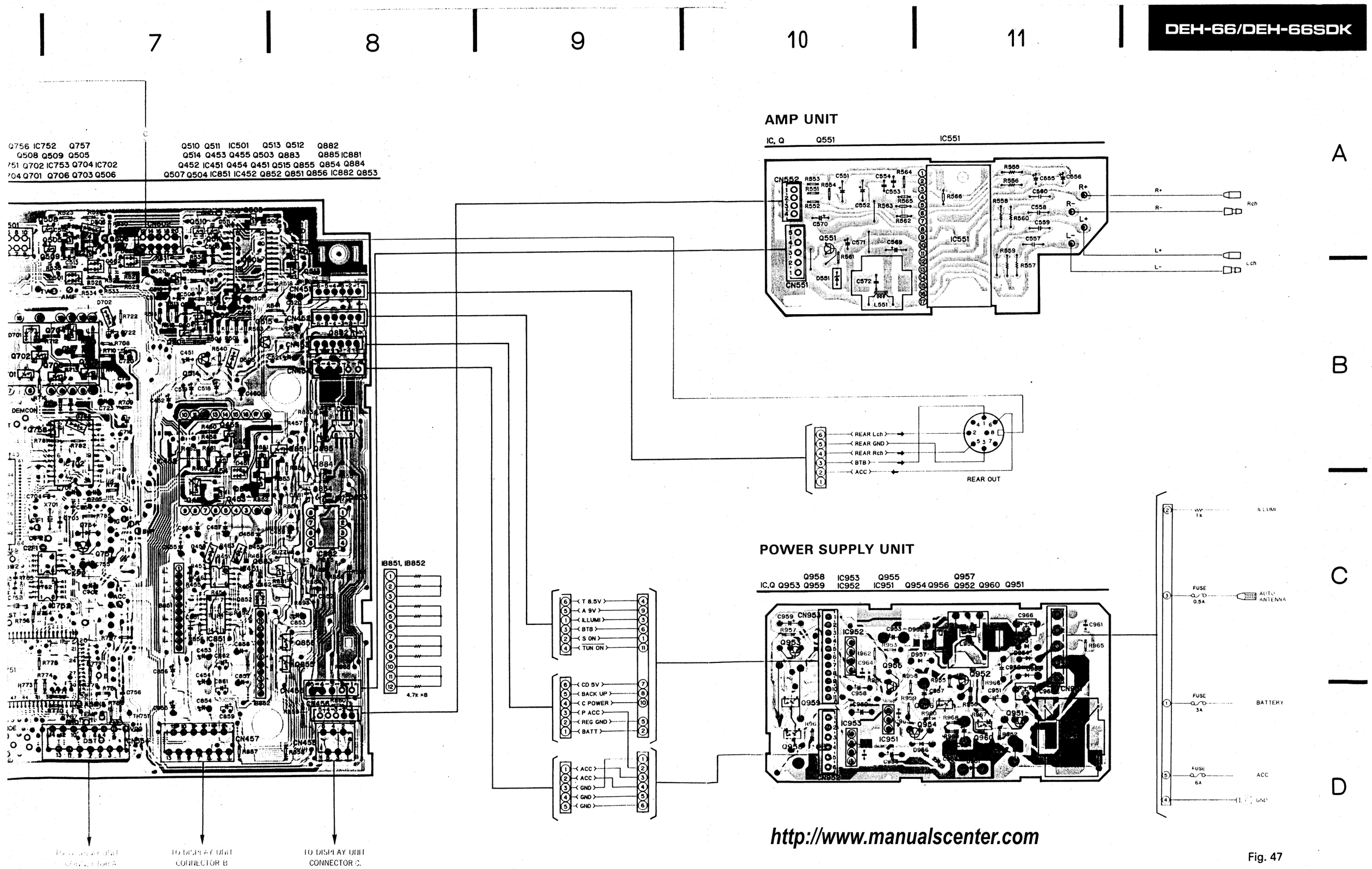

http://www.manualscenter.com

Fig. 47

13. SCHEMATIC CIRCUIT DIAGRAM (TUNER DEH-66SDK/WG)

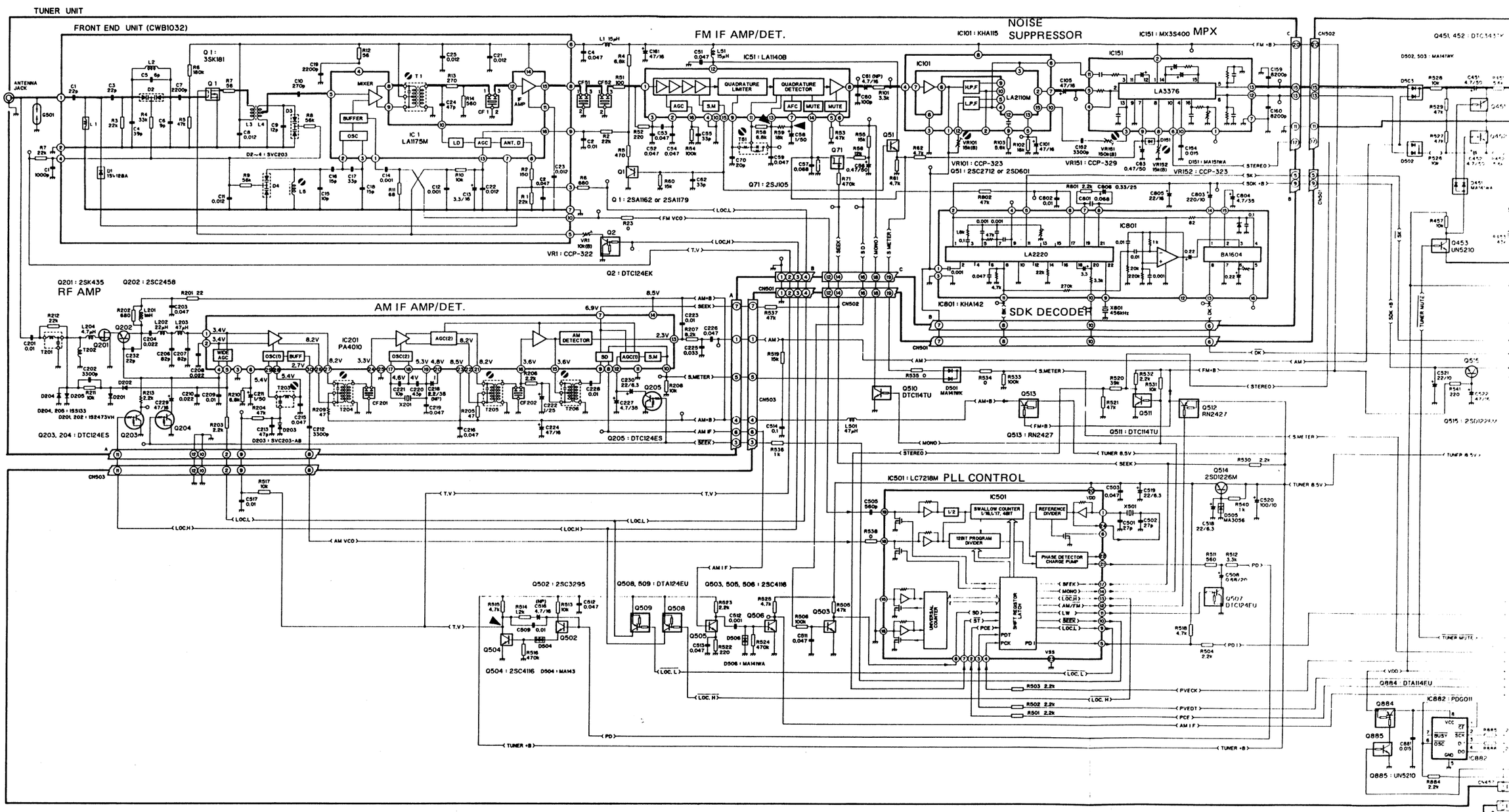

http://www.manualscenter.com

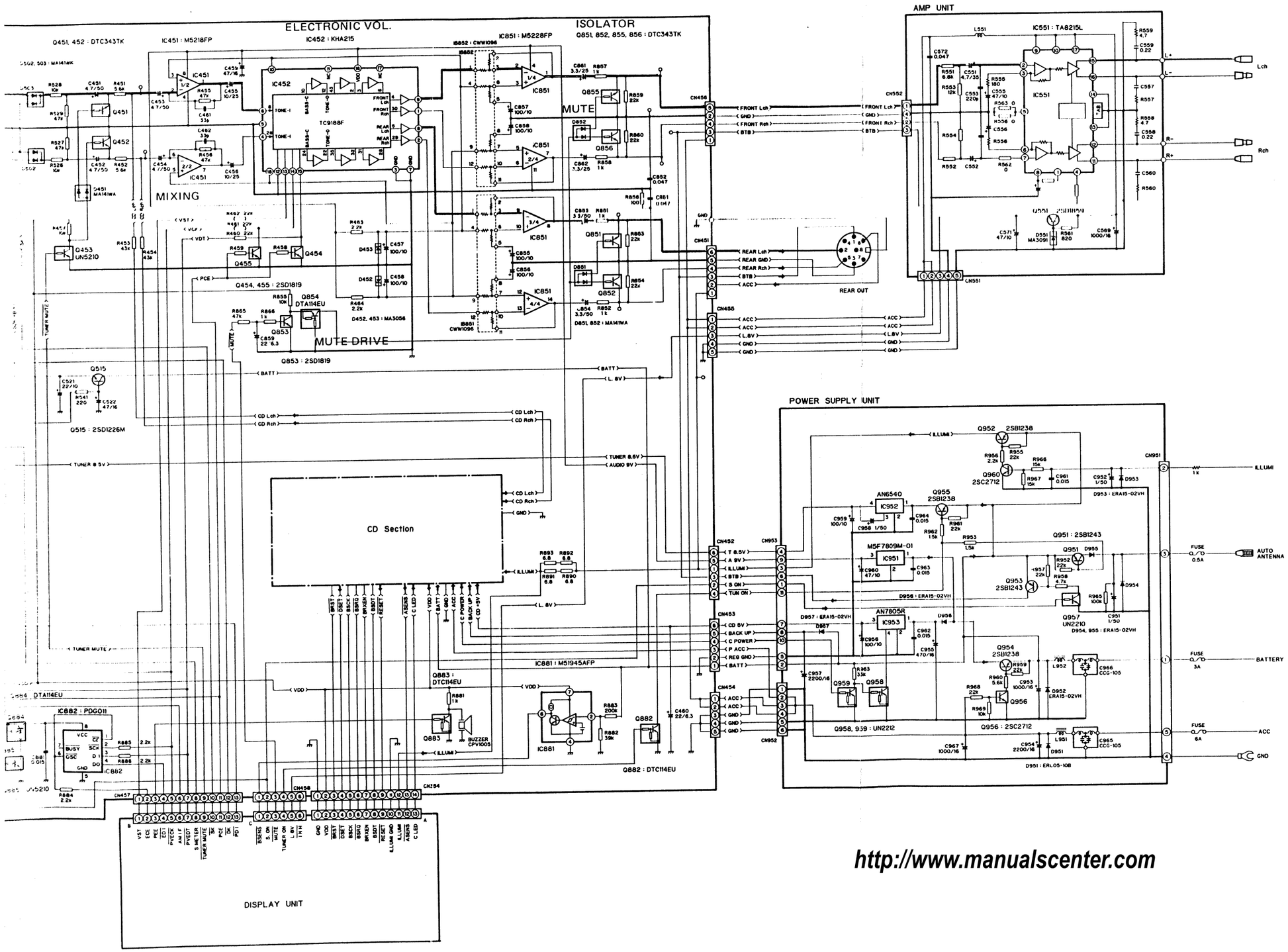

http://www.manualscenter.com

Fig. 46

12. CONNECTION DIAGRAM (TUNER DEH-66/UC)

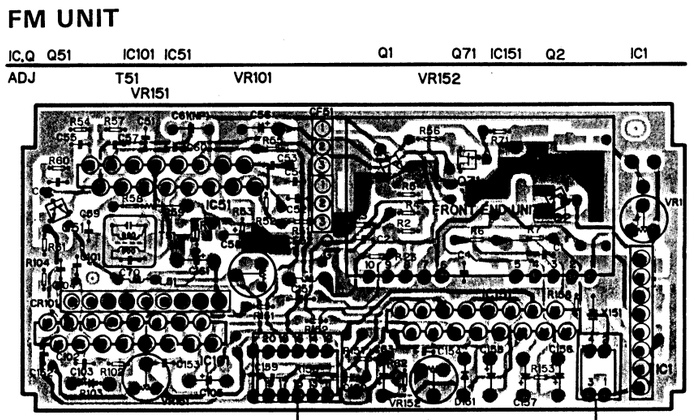

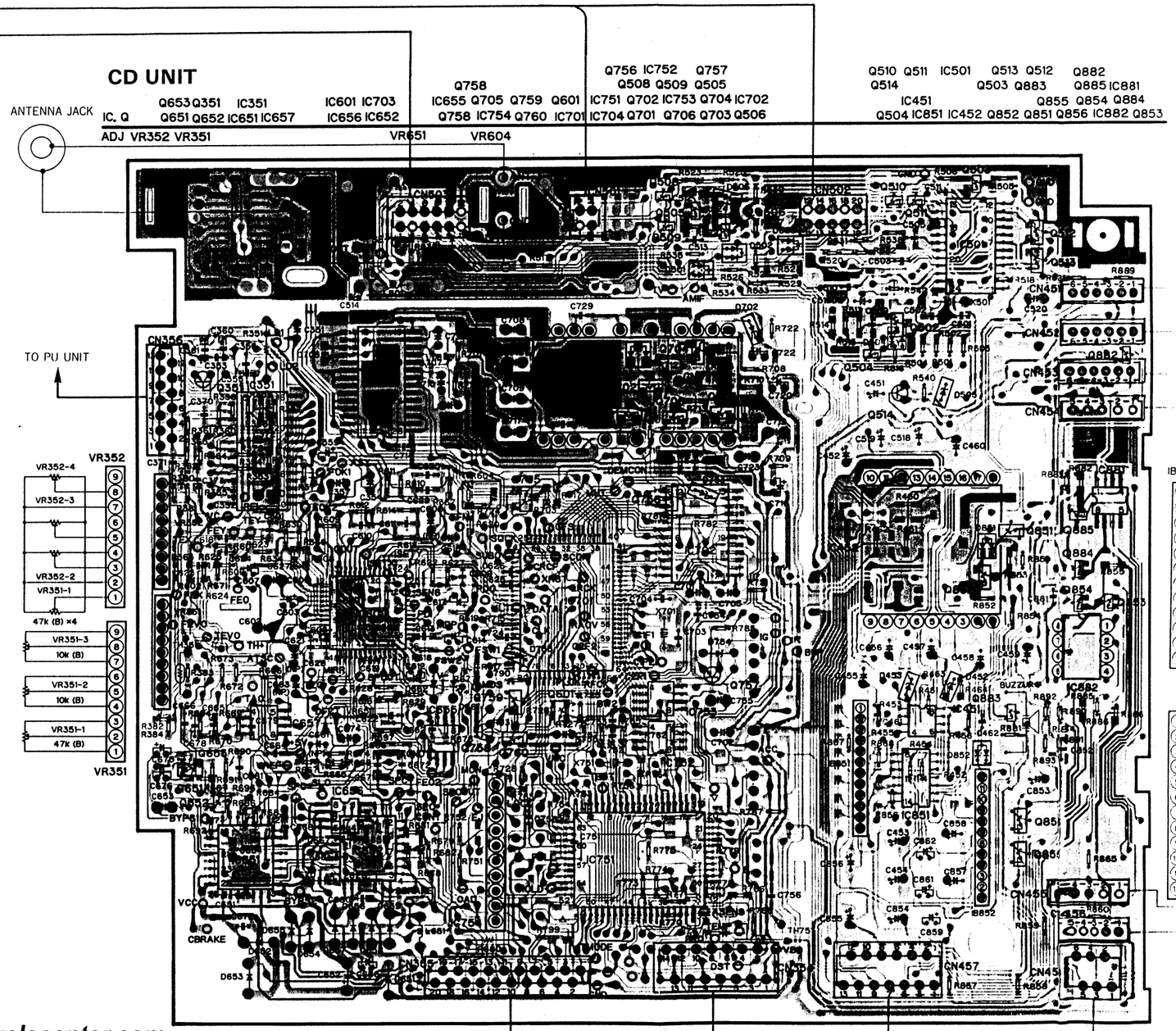

AM UNIT : IC201

1	2	3	4	5	6	7	8	9	10
3.4V	3.4V	0V				6.9V			
11	12	13	14	15	16	17	18	19	20
0V	2.3V	2.3V	8.5V	3.6V	3.6V	4.6V	4.0V	5.3V	4.8V
21	22	23	24	25	26	27	28	29	30
2.2V	8.2V	8.5V	3.3V	0V	8.2V	8.2V	5.4V	5.4V	

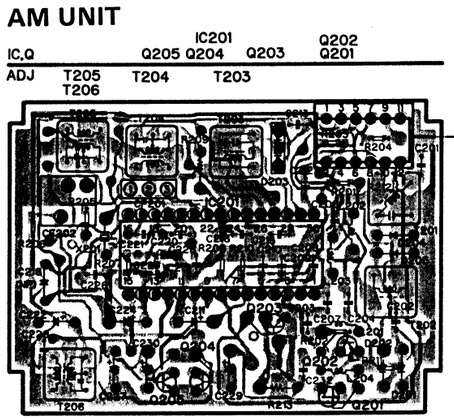

http://www.manualscenter.com

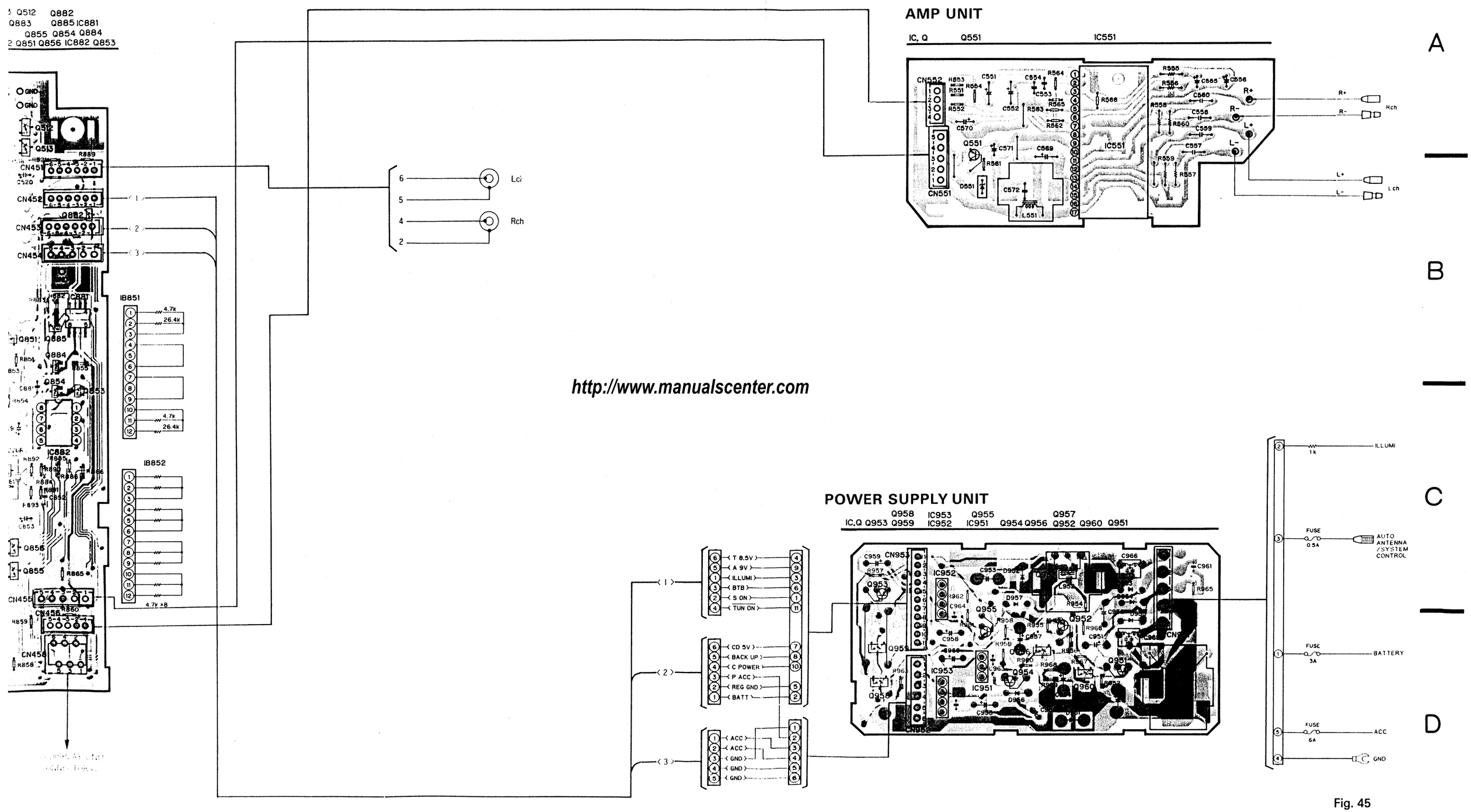

http://www.manualscenter.com

Fig. 45

11. SCHEMATIC CIRCUIT DIAGRAM (TUNER DEH-66/UC)

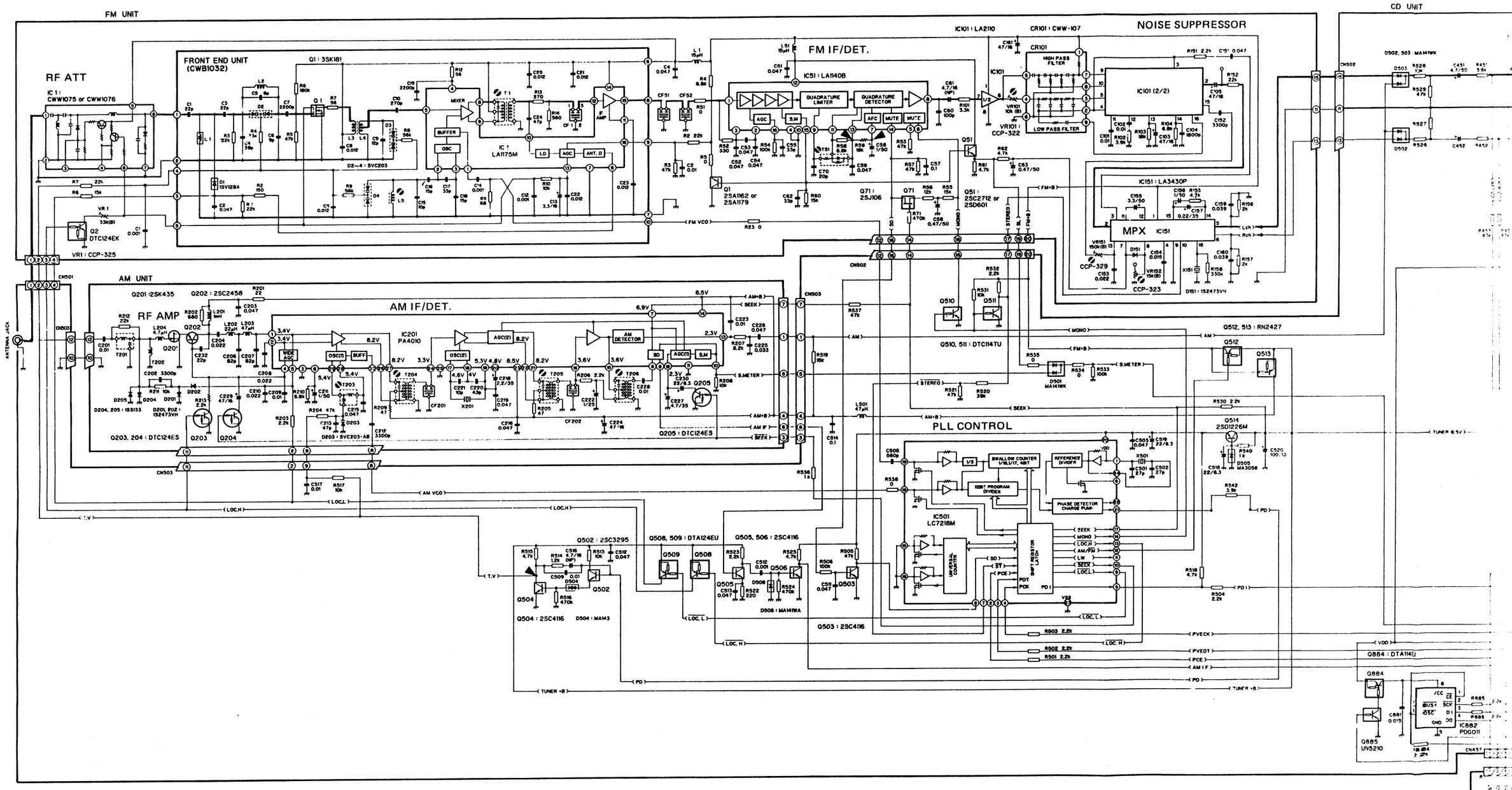

http://www.manualscenter.com

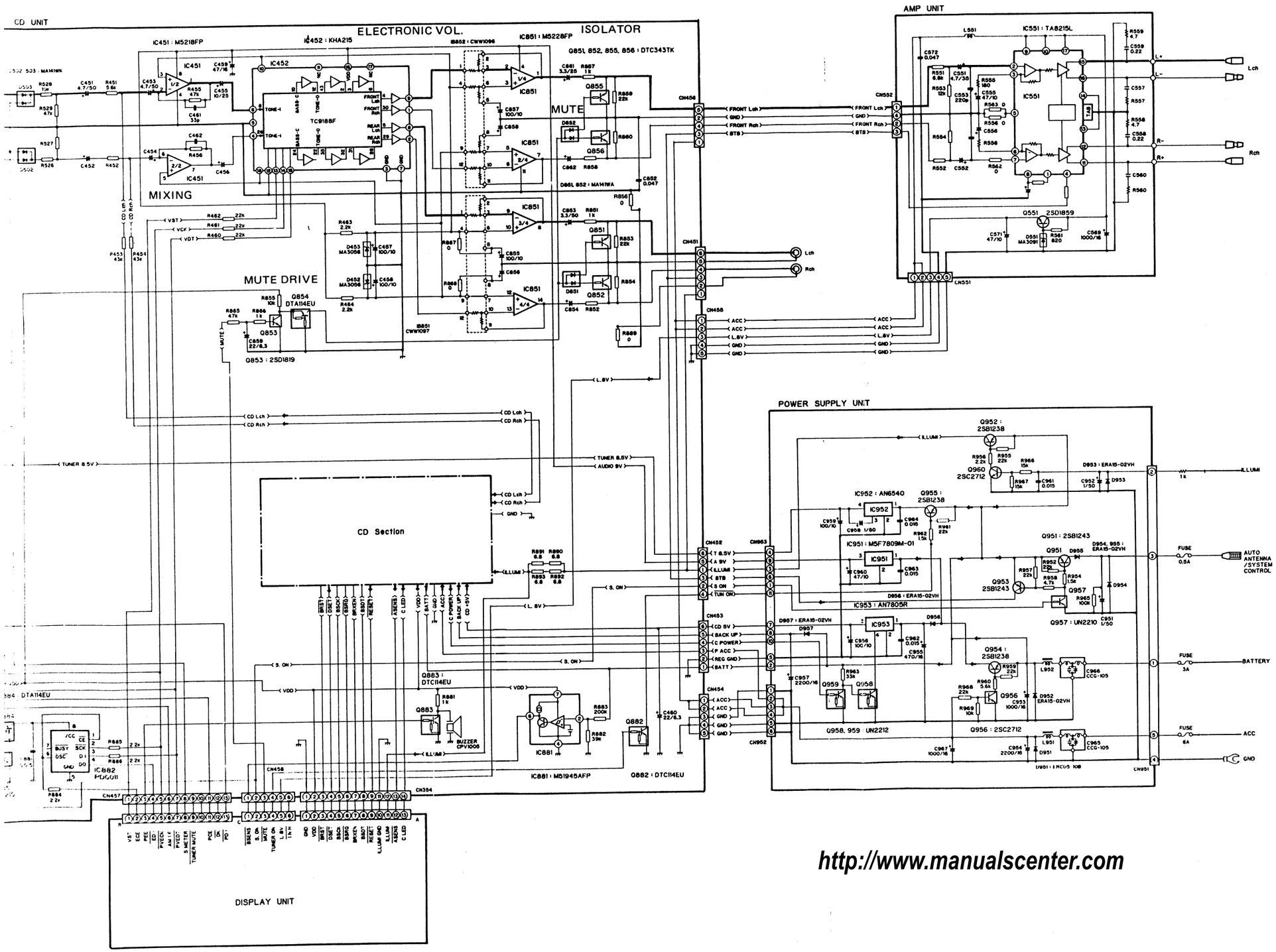

NOTE :

- Indicates a chip resistor.
- Indicates a chip capacitor.
- Indicates a chip transistor.

http://www.manualscenter.com

Fig. 44

Mark	No.	Part No.	Description
	58		Plug
	59		Case
	60	BMZ30P060FMC	Screw
	61		Heat Sink
	62	BMZ30P040FMC	Screw
	63		Holder
	64		Film
	65		Holder
	66		Film
◉	67	CWH1056	Amp Unit
	68	CDE1771	Cord
	69		Plug
	70		Plug
	71	PMS30P100FMC	Screw
	72	CNC1859	Holder
	73		Side Cover
	74		Connector
◉	75	CWE1105	Tuner Unit(WG)
	76	BMZ30P050FMC	Screw(UC,EW,EI)
		PMS30P050FMC	Screw(WG)
	77		Holder(UC,EW,EI)
	78		Plug
	79		Connector
	80		Plug
	81		Plug
	82	CPV1005	Buzzer
	83		Plug
	84		Plug
	85	CKS1075	Connector
	86	CKS1082	Connector
	87	CKS1083	Connector
	88	CKS1415	Connector
	89	CSS1030	Xtal Resonator
◉	90	CWX1114	CD Unit(UC)
◉		CWX1123	CD Unit(WG)
◉		CWX1119	CD Unit(EW,EI)
	91		Plug
	92		Plug,4P(UC,EW,EI)
			Plug,10P(WG)

Mark	No.	Part No.	Description
	93		Plug
	94	CKS1328	Connector
	95		Spacer
	96		Insulator
	97	BMZ26P040FMC	Screw
	98		Cushion
	99		Plate
	100		Plate
	101		Holder
	102		Chassis Unit(UC)
			Chassis Unit(WG,EW,EI)
	103		Side Cover
	104	CDH1068	Antenna Cable(UC,EW,EI)
	105	CDH1067	Antenna Cable(WG)
	106		Case
	107		Insulator(WG)
	108		Bracket
	109	CDE1775	Cord(UC)
	110	CNW-829	Cap(UC)
	111	CNC1484	Holder
	112	CNS1403	Panel
	113	CNC1631	Holder
	114	CDE1772	Cord(WG,EW,EI)
	115	CBH-865	Spring
	116	CNV1455	Cap(WG,EW,EI)
◉	117	CWE1096	FM Unit(UC)
◉		CWE1097	FM Unit(EW,EI)
	118		Holder(UC,EW,EI)
	119	CWB1032	Front End Unit
	120		Insulator(UC,EW,EI)
	121		Connector(UC,EW,EI)
	122		Connector(UC,EW,EI)
◉	123	CWA1007	AM Unit(UC,EW,EI)
◉	124	CXK2200	CD Mechanism Unit
	125		Cushion
	126	PMF26P060FMC	Screw
	127		Connector

- Exploded View

http://www.manualscenter.com

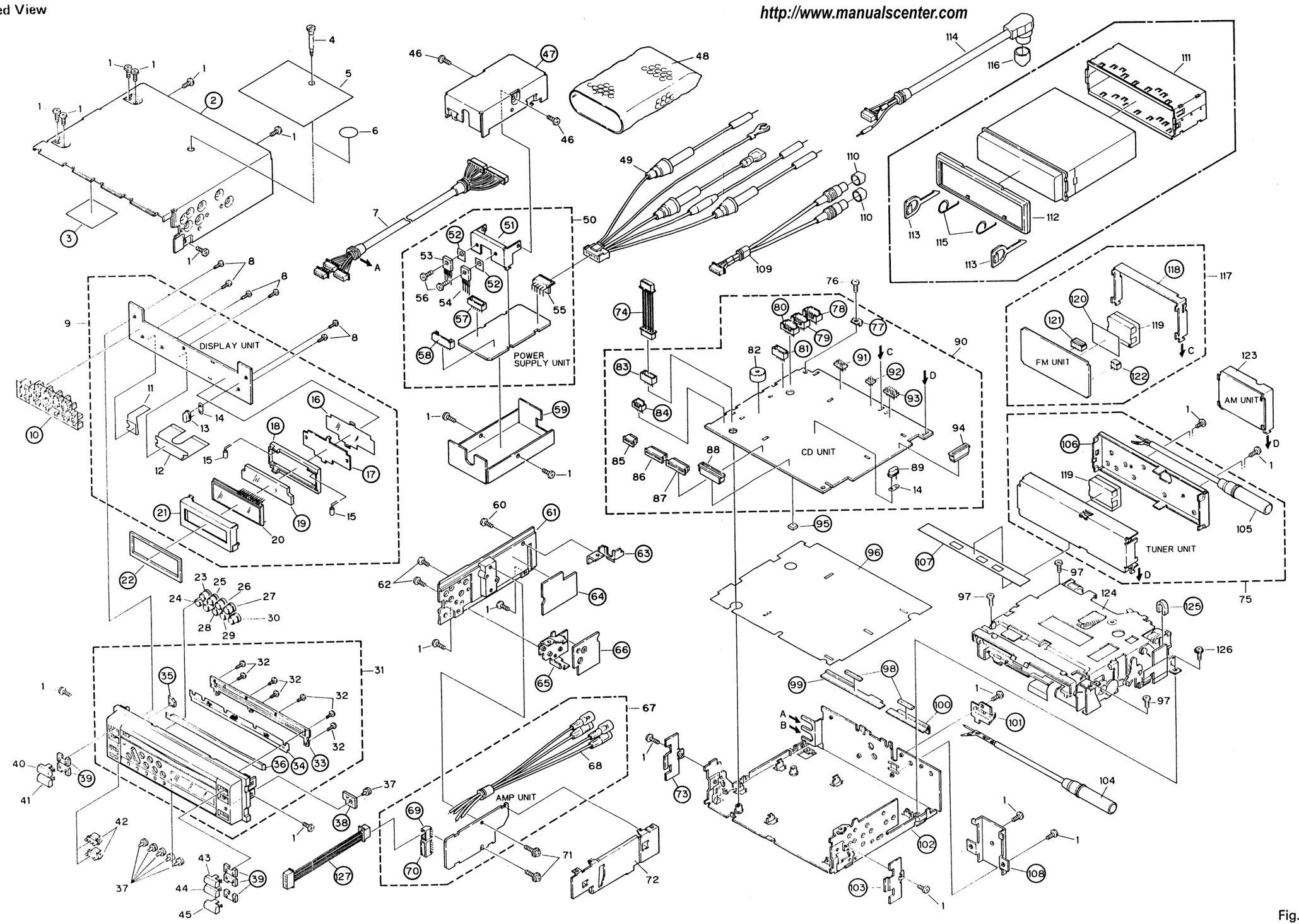

Fig. 52

• FM Unit

IC51 : LA1140B

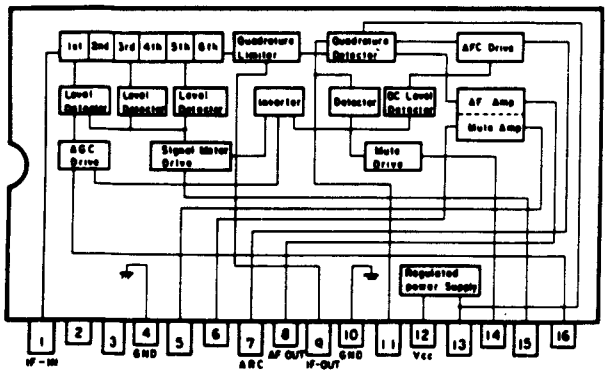

IC101 : LA2110

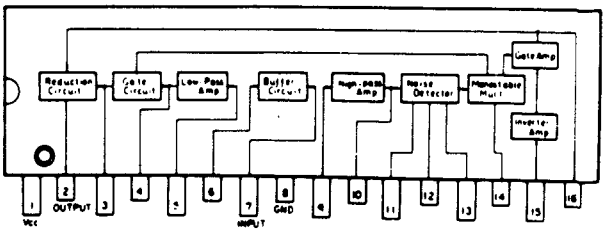

IC151 : LA3430P

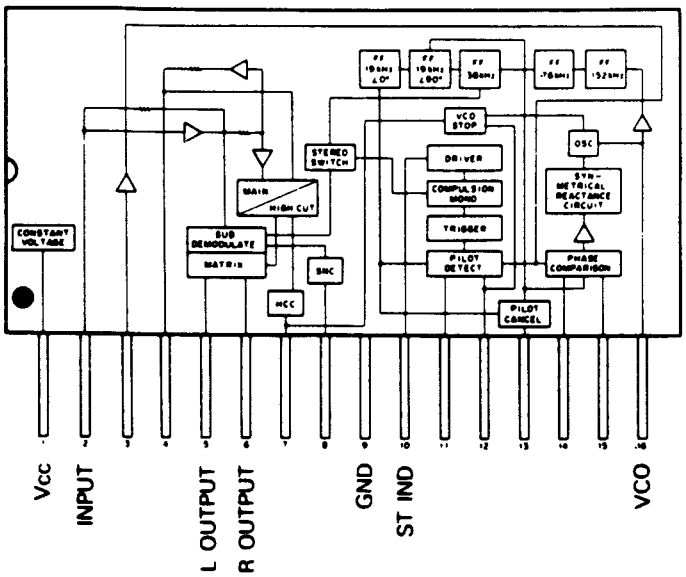

• AMP Unit

IC551 : TA8215L

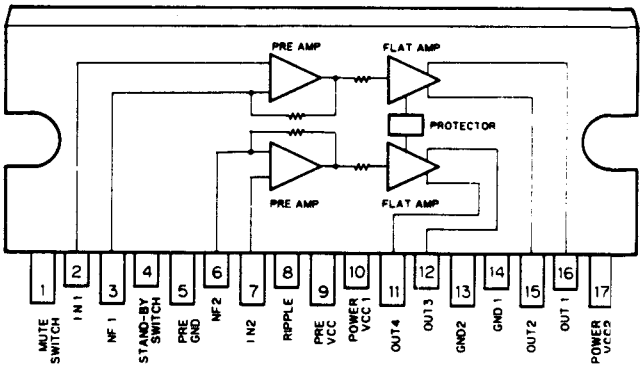

• Power Supply Unit

IC953 : AN7805R

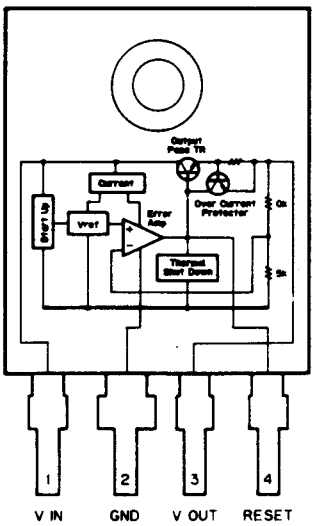

IC952 : AN6540

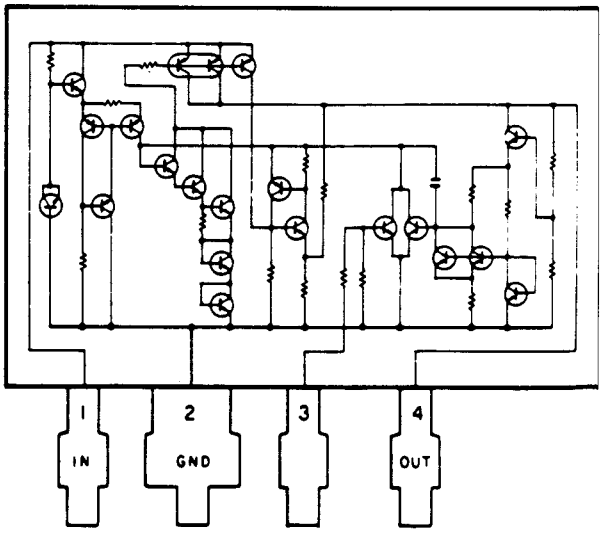

• ICs and Transistors

UN2111
UN2210
UN2211
UN2212
UN5210
RN2427
DTA114EU
DTC114EU
DTC114TU
DTA124EU
DTC124TU
DTC124EK
DTC343TK
DTC124EU

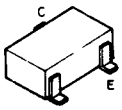

DTC124ES

DTC124ES

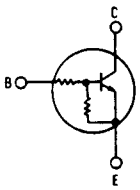

DTA114EU
DTA124EU
RN2427
UN2111

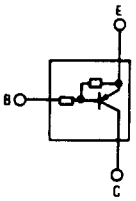

DTC124EU
DTC124EK
DTC114EU
UN2211
UN2212

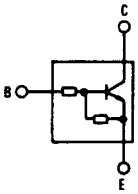

DTC114TU
DTC124TU
DTC343TK
UN2210
UN5210

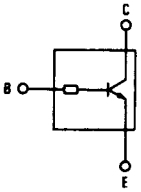

2SK435

2SC2458

2SJ106

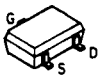

2SB822F
2SB822

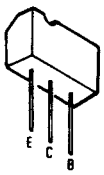

2SC3673

2SD1226M
2SD1859
2SB1243
2SB1238

2SA1162
2SA1179
2SC2712
2SC3295
2SC4116
2SD601
2SD1048
2SD1819

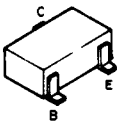

• AM Unit

IC201 : PA4010

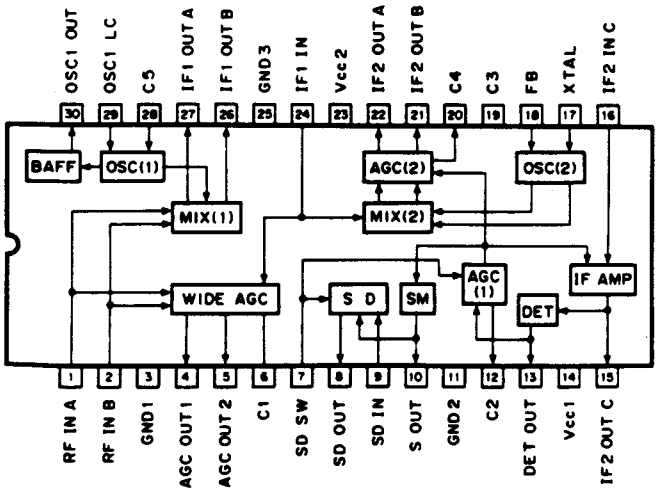

2SJ105

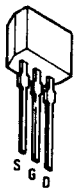

● Pin Functions (CXD1135Q)

Pin No.	Pin Name	I/O	Function and Operation
1	FSW	Output	Spindle motor output filter time constant selector output
2	MON	Output	Spindle motor ON/OFF control output
3	MDP	Output	Spindle motor drive output - "rough" control in CLV-S mode, and phase control in CLV-P mode
4	MDS	Output	Spindle motor drive output - speed control in CLV-P mode
5	EFM	Input	EFM signal input from RF amplifier
6	ASY	Output	EFM signal slice level control output
7	LOCK	Output	Sampling of GFS signal by WFCK/16 - "H" output if "H", "L" output if "L" detected eight times in succession
8	VCOO	Output	VCO output - f = 8.6436MHz when EFM signal is locked
9	VCOI	Input	VCO input
10	TEST	Input	(0V)
11	PDO	Ouptut	EFM signal and VCO/2 phase comparison output
12	V_{SS}	–	Ground (0V)
13	CLK	Input	Serial data transfer clock input from CPU - data latched by clock leading edge
14	XLT	Input	Latch input from CPU - 8-bit shift register data (serial data from CPU) is latched in each register.
15	DATA	Input	Serial data input from CPU
16	XRST	Input	System reset signal input - reset when "L"
17	CNIN	Input	Tracking pulse input
18	SENS	Output	Output of internal status according to address
19	MUTG	Input	Muting input - when ATTM of internal register A is "L", MUTG "L" denotes normal status, and "H" muted status
20	CRCF	Output	Sub-code Q CRC check result output
21	EXCK	Input	Clock input for sub-code serial output
22	SBSO	Output	Sub-code serial output
23	SUBQ	Output	Sub-code Q output
24	SCOR	Output	Sub-code synchronizing S0+S1 output
25	SQCK	Input/Output	Sub-code Q read clock
26	SQEX	Input	SQCK selector input
27	DOTX	Output	Digital out output ($\overline{WFCK}$ output)
28	GFS	Output	Frame synchronizing lock status indicator output
29	DB08	Input/Output	External RAM data pin - DATA8 (MSB)
30	DB07	Input/Output	External RAM data pin - DATA7
31	DB06	Input/Output	External RAM data pin - DATA6
32	DB05	Input/Output	External RAM data pin - DATA5
33	V_{DD}	–	Power supply (+5V)
34	DB04	Input/Output	External RAM data pin - DATA4
35	DB03	Input/Output	External RAM data pin - DATA3

Pin No.	Pin Name	I/O	Function and Operation
39	SPDLO	Output	Spindle drive output
40	WDCK	Input	Auto-sequence clock input 176.4kHz
41	FOK	Input	FOK signal input pin
42	MIRR	Input	Mirror signal input pin
43	DVEE		DGND connection
44	DFCT	Input	DEFECT signal input pin - defect countermeasure circuit activated when this input is high
45	TE	Input	Tracking error signal input pin
46	TZC	Input	Tracking zero-cross comparator input pin
47	ATSC	Input	Tracking lens offset detector window comparator input pin
48	FE	Input	Focus error signal input pin

*IC701: CXD1135Q

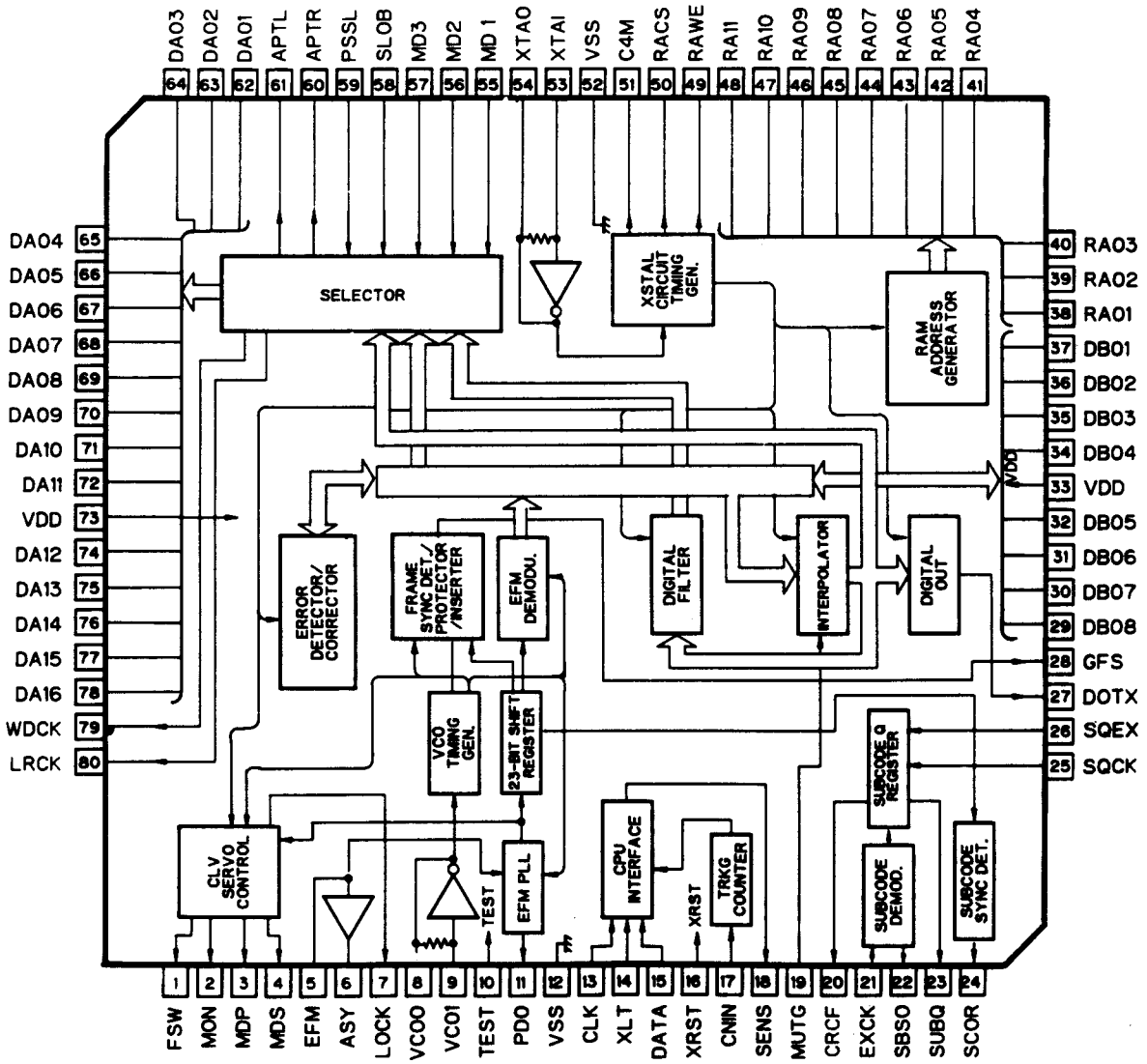

http://www.manualscenter.com

Pin No.	Pin Name	I/O	Function and Operation
29	DISC	CMOS IN	Disc sensor input "H"=Disc loaded
30	$\overline{\text{CLMP}}$	CMOS IN	Disc clamped input "L"=Disc clamped
34	$\overline{\text{TEMP}}$	INPUT	High temperature detector
35	$\overline{\text{ACENS}}$	CMOS IN	ACC sens input "L"=ACC ON
36	SENS	CMOS IN	CD LSI internal status monitor input
38	CONT	CMOS OUT	PWM driver ON/OFF "H"=ON
41	BSI	CMOS IN	Bus data input
42	BSO	CMOS OUT	Bus data output
43	BSCK	IN/OUT	Bus serial clock CMOS Input/Output
44	SCOR	CMOS IN	Sub-code synchronization input
45	BW2	OUTPUT	Spindle motor output filter time constant selection output Neutral resistivity N channel open drain
46	$\overline{\text{MUTG}}$	OUTPUT	Muting output "L"=Mute ON
47	$\overline{\text{DEEM}}$	OUTPUT	Emphasis selector output "H"=Emphasis ON Neutral resistivity N channel open drain
48	$\overline{\text{CBRAK}}$	OUTPUT	PWM driver brake control "L"=Brake ON
50	SPC	CMOS IN	Spindle motor rpm indicator "L"=Low speed
52	FOK	CMOS IN	Indication that focus is closed and RF input is active
53	LOAD	OUTPUT	Moter drive output
54	EJ		Neutral resistivity N channel open drain
58	VDD	——	
59	SPCO	CMOS OUT	Spindle motor rpm sensor circuit ON/OFF
60	SQCK	CMOS OUT	Sub-code clock
61	BRXEN	CMOS OUT	Bus reception enable output "Hi-Z"= Reception enable
62	$\overline{\text{BRST}}$	CMOS IN	Bus reset
63	XRST	CMOS OUT	CD LSI reset output "L"=Reset
64	$\overline{\text{XLT}}$	CMOS OUT	Serial data latch output

LOAD	H	L	H
EJ	L	H	H
	Load	Eject	Stop

IC501 : LC7218M

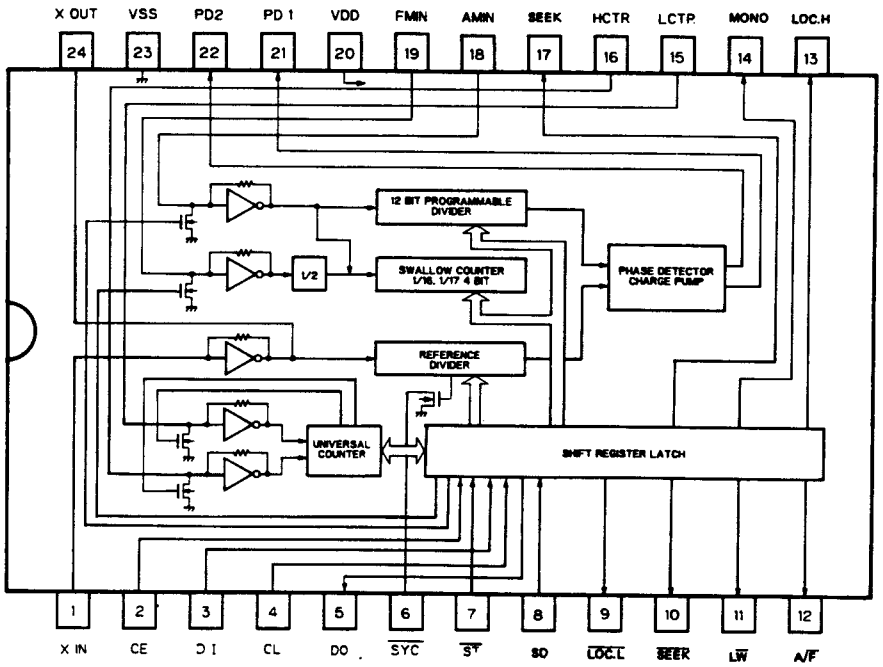

KHA142(Tuner Unit . . . . . WG)

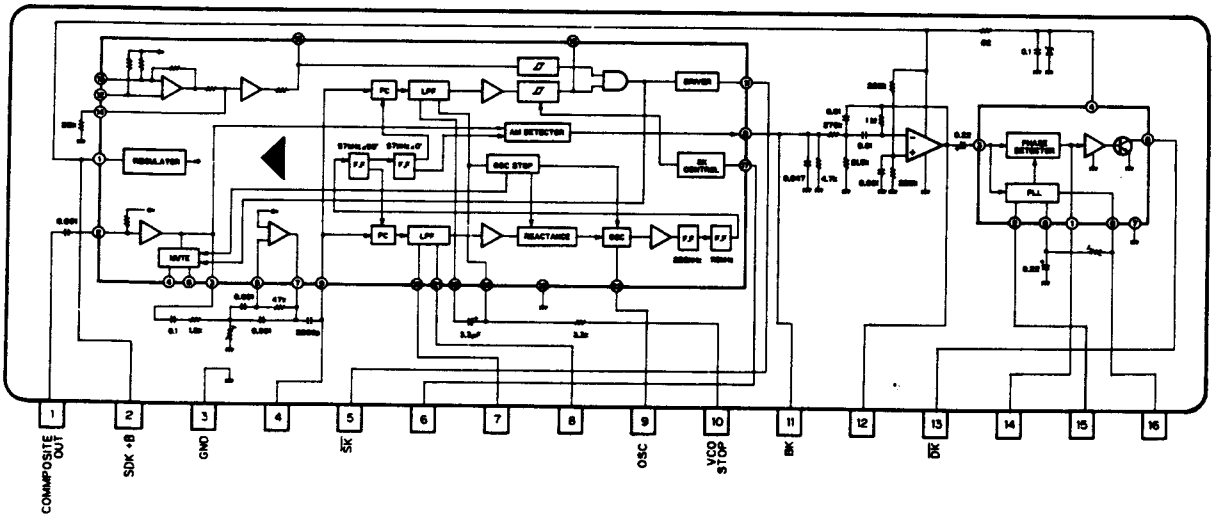

MX3S400(Tuner Unit . . . . . WG)

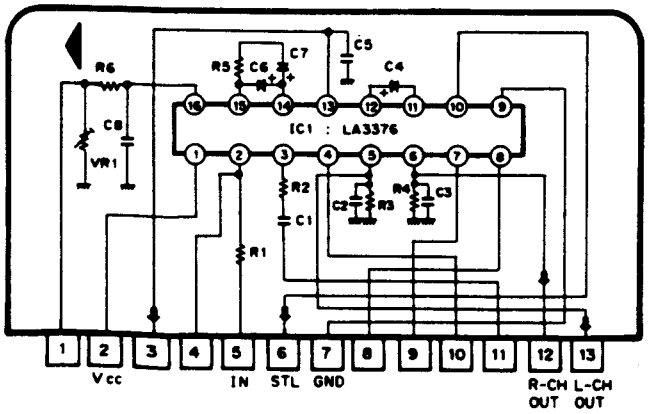

KHA115(Tuner Unit . . . . . WG)

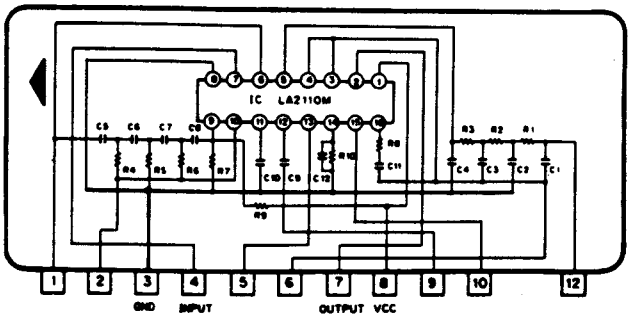

IC951 : M5F7809M-01

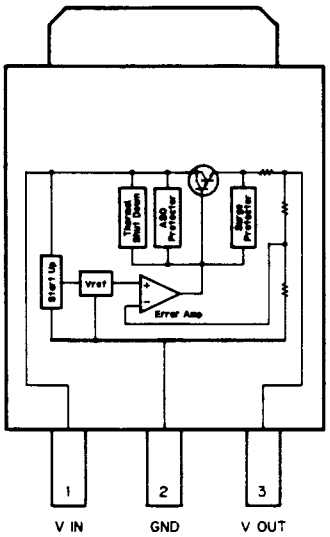

● Display Unit

IC902 : NJM2903M

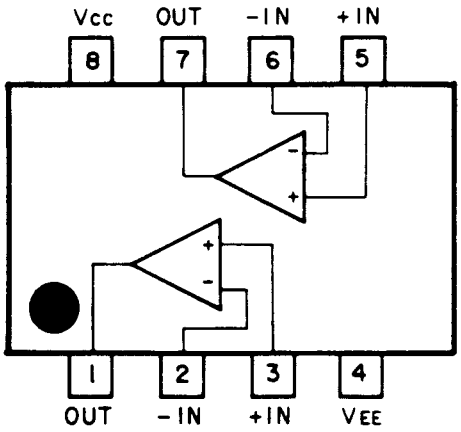

*IC901 : PD4139A(UC, EW, EI), PD4153A(WG)

*IC's marked by * are MOS type.*
Be careful in handling them because they are very liable to be damaged by electrostatic induction.

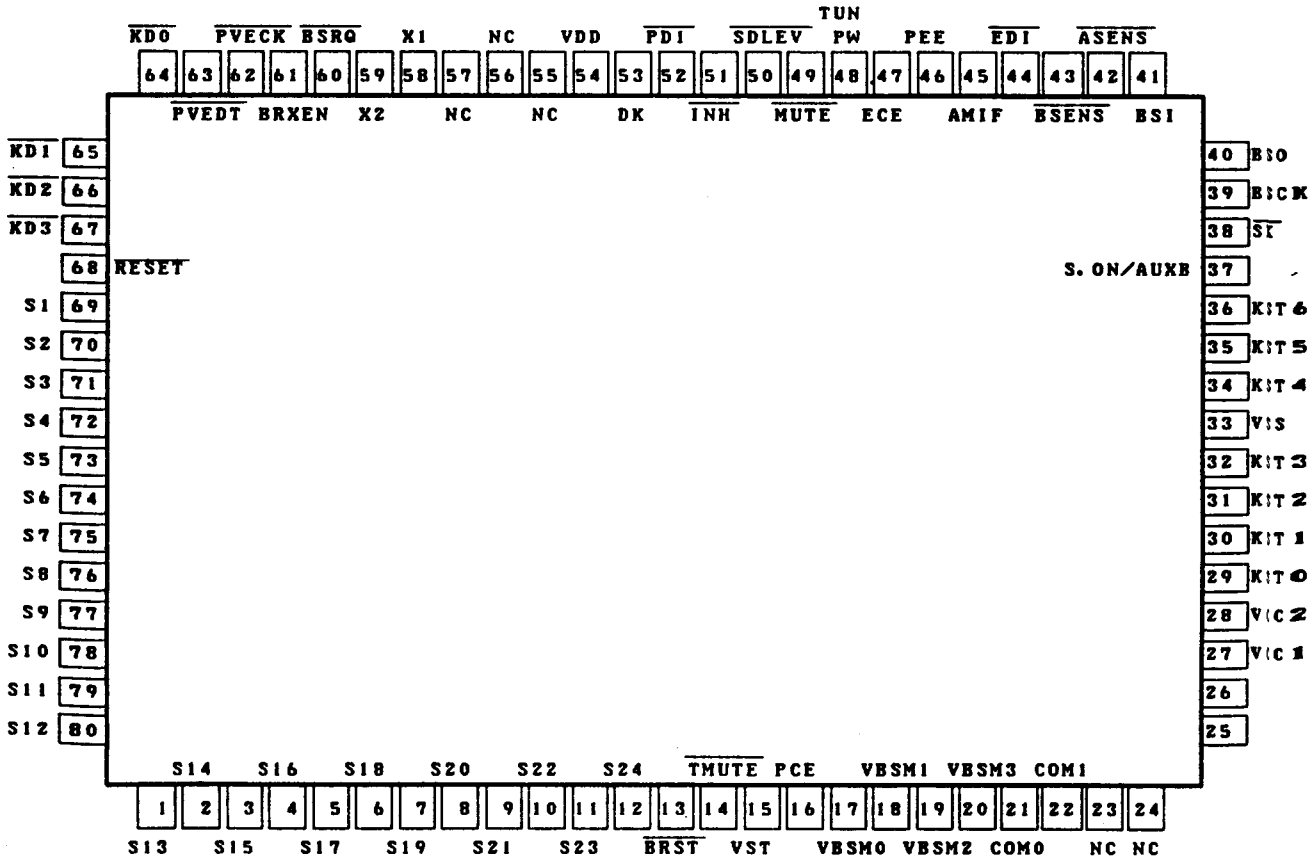

http://www.manualscenter.com

● CD Unit

IC754 : M54546AL

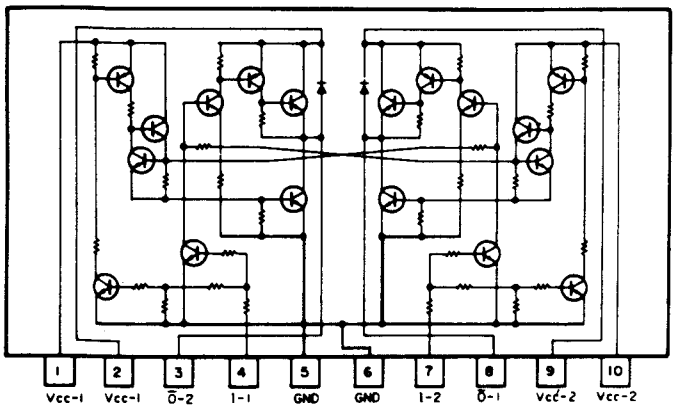

IC752:M51955AFP

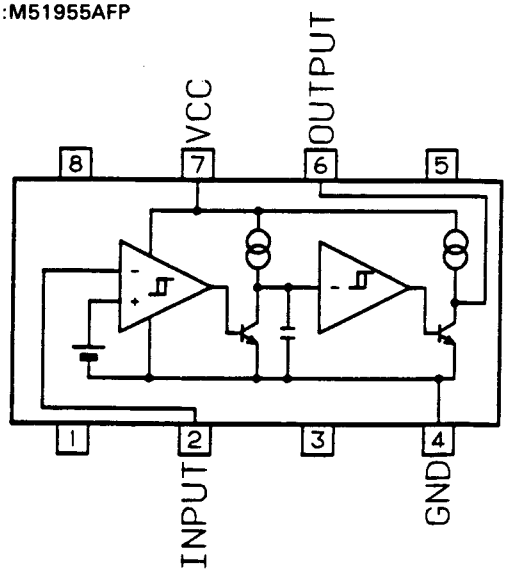

IC704 : KHA220

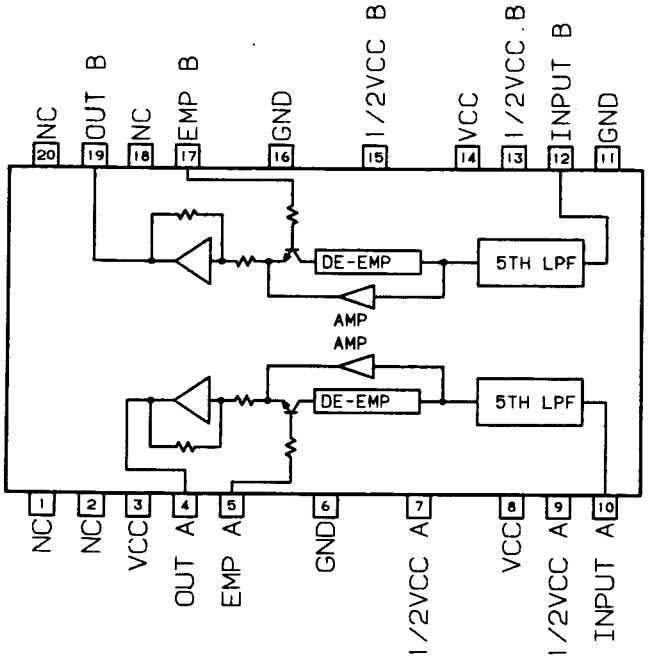

IC451, 655, 657 : M5218FP

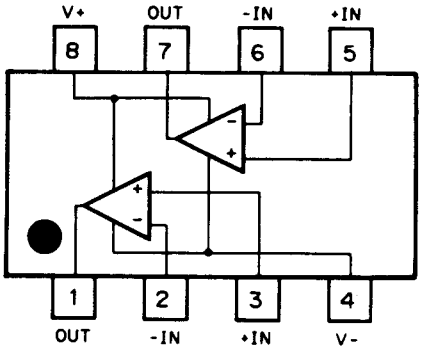

IC656:M5233FP

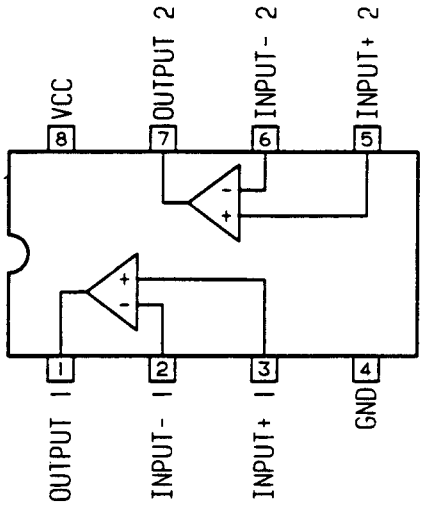

IC753, 881 : M51945AFP

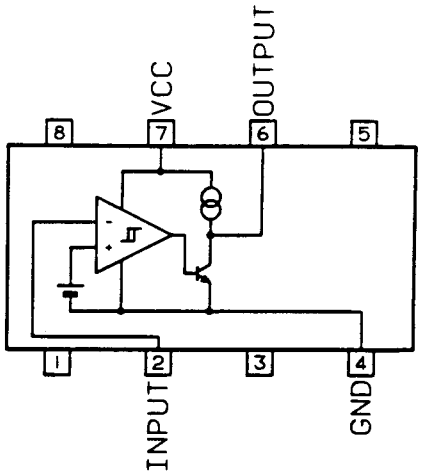

*IC351 : CXA1081M

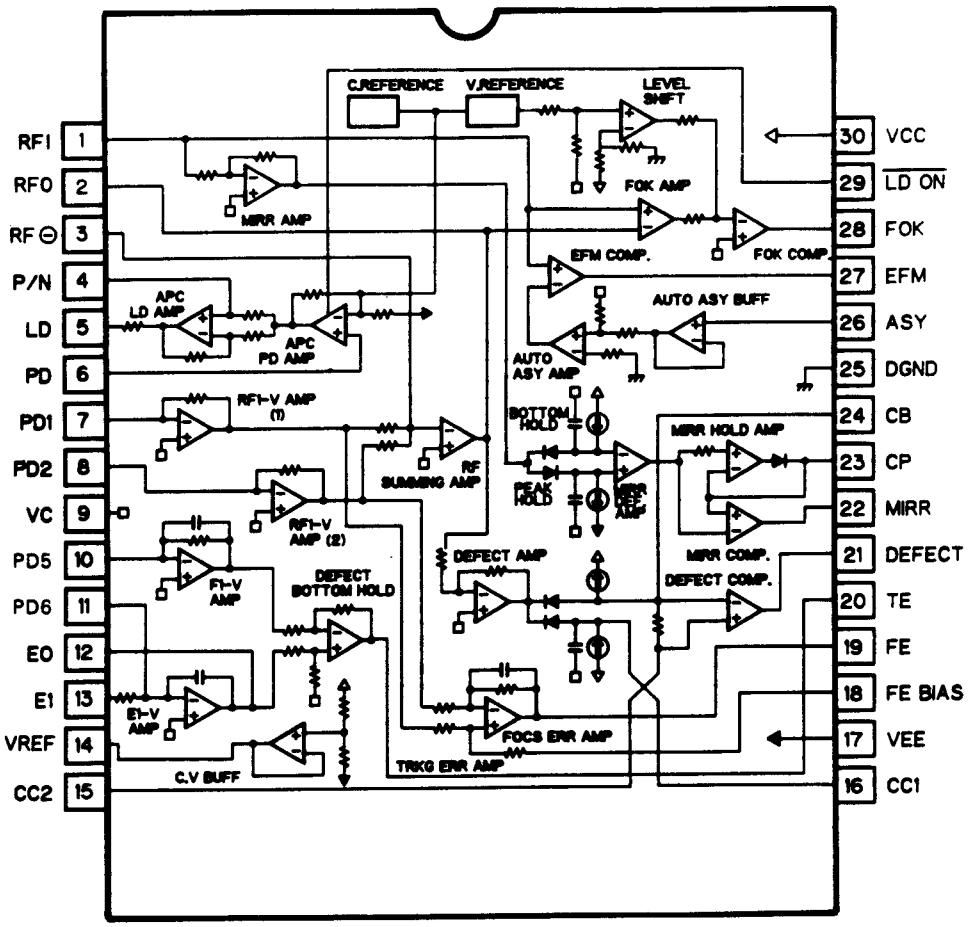

● Pin Functions (CXA1081M)

Pin No.	Pin Name	I/O	Function and Operation
1	RFI	Input	Input of capacitance-coupled RF summing amplifier output
2	RFO	Output	RF summing amplifier output pin - eye pattern check point
3	RF−	Input	RF summing amplifier feedback input pin
4	P/N	Input	Laser diode P-sub/N-sub selector pin
5	LD	Output	APC LD amplifier output pin
6	PD	Input	APC PD amplifier input pin
7	PD1	Input	RF I-V amplifier (1) inverter input pin - connected to photodiode A + C pin for current input
8	PD2	Input	RF I-V amplifier (2) inverter input pin - connected to photodiode B + D pin for current input
9	VC		Connected to VR
10	F	Input	I-V amplifier inverter input pin - connected to photodiode for current input
11	E	Input	I-V amplifier inverter input pin - connected to photodiode for current input
12	EO	Output	E I-V amplifier output pin
13	EI	Input	E I-V amplifier feedback input pin for E I-V amplifier gain adjustment
14	VR	Output	$(V_{CC} + V_{EE})/2$ DC voltage output pin
15	CC2	Input	Input of capacitance-coupled DEFECT bottom hold output
16	CC1	Output	DEFECT bottom hold output pin
17	VEE		Ground connection
18	FE BIAS	Input	Focus error amplifier non-inverting bias pin Used in focus error amplifier CMR adjustment
19	FE	Output	Focus error amplifier output pin
20	TE	Output	Tracking error amplifier output pin
21	DEFECT	Output	DEFECT comparator output pin
22	MIRR	Output	MIRR comparator output pin
23	CP	Input	MIRR hold capacitor connector pin - MIRR comparator non-inverting input pin
24	CB	Input	DEFECT bottom hold capacitor connector pin
25	DGND		Ground connection
26	ASY	Input	Auto asymmetry control input pin
27	EFM	Output	EFM comparator output pin
28	FOK	Output	Focus OK comparator output pin
29	$\overline{\text{LDON}}$	Input	Laser diode ON/OFF switching
30	VCC		Positive power supply pin

IC452 : KHA215

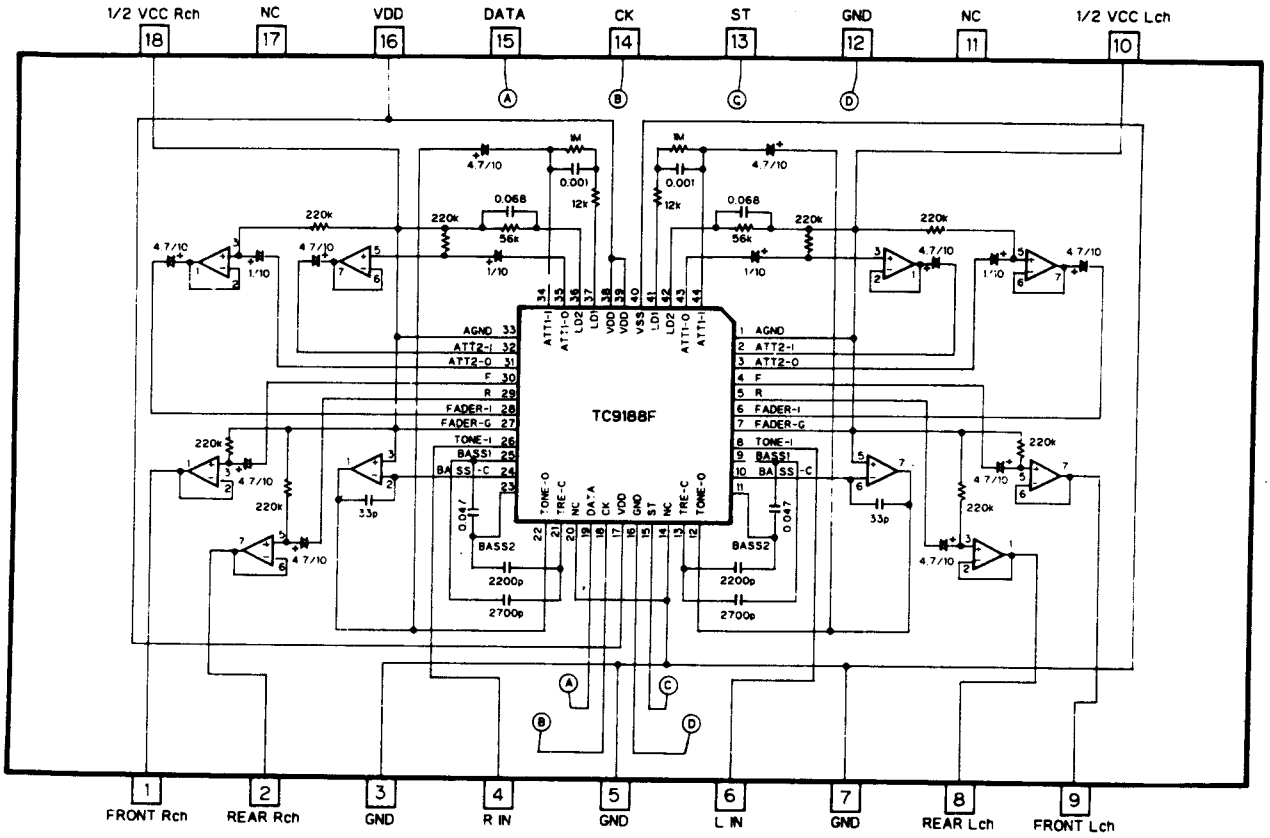

IC1(FM Unit. . . . . UC only)

CWW1075
(CWW1076)

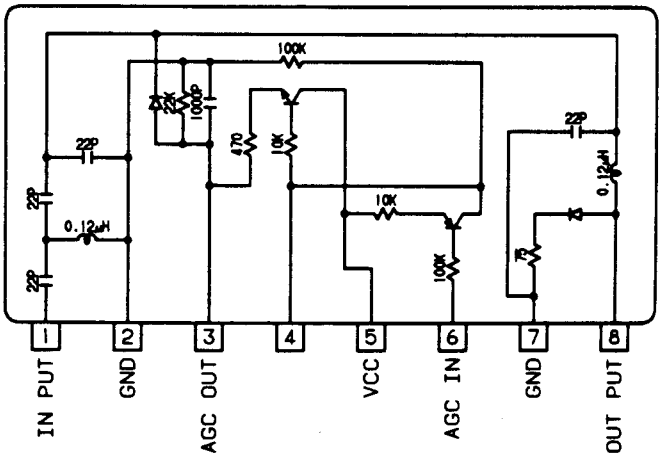

http://www.manualscenter.com

IC651,652:PA3023

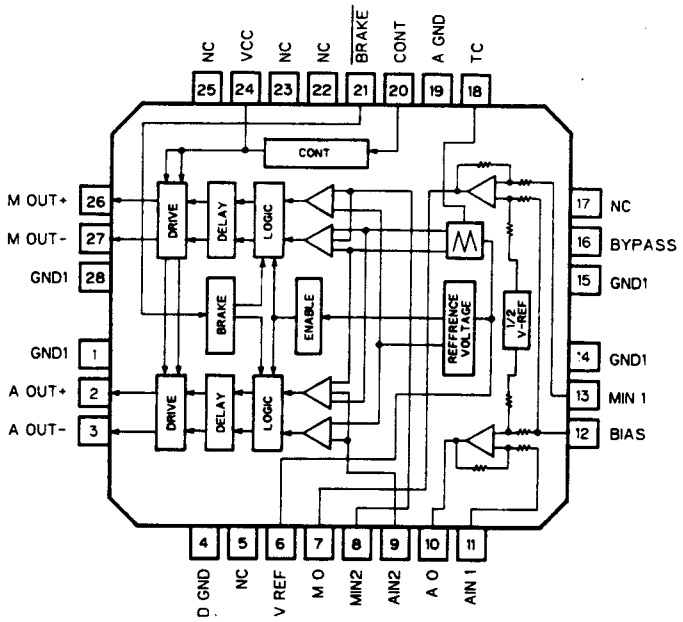

Pin Functioons (PA3023)

Pin	Pin Name	I/O	Function and Operation
1	GND1	–	Sub GND.
2	AOUT +	Output	Positive actuator drive output.
3	AOUT –	Output	Negative actuator drive output.
4	DGND	–	Power stage GND.
5	NC	–	
6	Vref	–	IC stabilizing reference voltage output.
7	MO	Output	Analog signal output for motor.
8	MIN2	Input	Analog signal input 2 for motor.
9	AIN2	Input	Analog signal input 2 for the actuator.
10	AO	Output	Analog signal output for the actuator.
11	AIN1	Input	Analog signal input 1 for the actuator.
12	BIAS	–	External bias input pin.
13	MIN1	Input	Analog signal input 1 for the motor.
14	GND1	–	Sub GND.
15	GND1	–	Sub GND.
16	BYPASS	–	Ripple filter condensor connection pin for IC stabilizing reference voltage.
17	NC	–	
18	TC	–	Condenser connection pin for obtaining triangle waveform.
19	AGND	–	Small signal GND.
20	CONT	Input	Circuit operation/standby switch input. Active H
21	$\overline{\text{BRAKE}}$	Input	Motor operation/non-operation switch input. Active L
22	NC	–	
23	NC	–	
24	Vcc	–	ACC power supply.
25	NC	–	
26	MOUT +	Output	Positive motor driver output.
27	MOUT –	Output	Negative motor driver output.
28	GND1	–	Sub GND

*IC601:CXA1082AQ

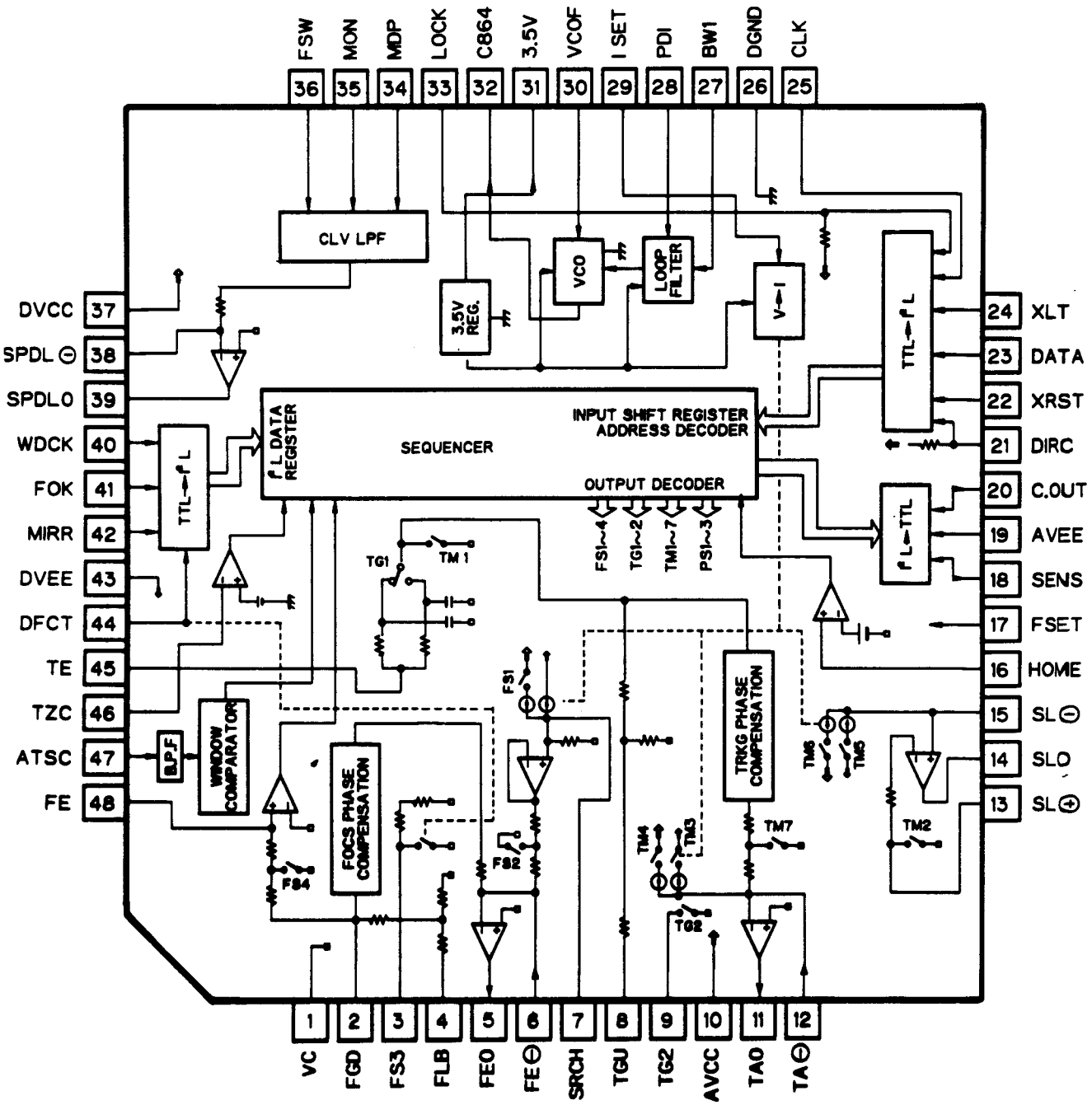

● Pin Functions (CXA1082AQ)

Pin No.	Pin Name	I/O	Function and Operation
1	VC		Servo reference voltage input pin
2	FGD		Connect to pin 3 to switch focus servo OFF when defect occurs
3	FS3		Internal DFCT switch closed when pin 44 is high
4	FLB		Focus servo low region boost external time constant pin
5	FEO	Output	Focus drive output - connect to low-end equalizer
6	FE−	Input	Focus amplifier inverter input pin
7	SRCH		Focus search waveform generation external time constant connector pin
8	TGU	Output	Tracking low-end equalizer connection output pin
9	TG2		Pin 7 discharge switch for starting focus search from lens center
10	AVCC		+5V connection
11	TAO	Output	Tracking drive output
12	TA−	Input	Tracking amplifier inverter input pin
13	SL+	Input	Sled amplifier non-inverting input pin
14	SLO	Output	Sled drive output
15	SL−	Input	Sled amplifier inverter input pin
16	HOME	Input	Sled home position detector switch input pin
17	FSET		Focus/tracking phase compensation peak and CLV low-pass filter f_O setting pin
18	SENS	Output	Output of FZC, AS, TZC, SSTOP, and $\overline{BUSY}$ depending on command from CPU
19	AVEE		AGND connection
20	COUT	Output	Track counter signal output
21	DIRC		Not used
22	XRST	Input	Reset input pin - reset when "L"
23	DATA	Input	Serial data input from CPU
24	XLT	Input	Latch input from CPU
25	CLK	Input	Serial data transfer clock input from CPU
26	DGND		DGND connection
27	BW1		Loop filter external time constant pin
28	PDI	Input	Input of CXD1135 phase comparator output PDO
29	ISET		Current which determines focus search, track jump, and sled kick height
30	VCOF		VCO free-running frequency more or less inversely
31	3.5V	Output	Proportional to resistance value between pins 30 and 31
32	C864	Output	8.64MHz VCO output pin
33	LOCK		Not used
34	MDP		Connect to MDP pin of CXD1135
35	MON		Connect to MON pin of CXD1135
36	FSW		CLV servo error signal low-pass filter external time constant pin
37	DVCC		+5V connection
38	SPDL−	Input	Spindle drive amplifier inverter input pin

● Circuit Diagram Symbols

Symbol	Function
A	1/4 division detector output used in detection of RF and focus signal
ACC	14.4V
AGND	Analog ground
ASY	Asymmetry
ATSC	Anti-shock (carriage motor control during playback)
B	1/4 division detector output used in detection of RF and focus signal
BATT	14.4V (Constant power supply)
BDATA	Bus data signal
BRST	Bus reset signal
BRXEN	Bus line busy signal
BSCK	Bus synchronizing shift clock
BSRQ	Bus service request line
BYPASS1	Bypass 1 (non-drive enabled by connecting to ground during PWM IC651 operation)
BYPASS2	Bypass 2 (non-drive enabled by connecting to ground during PWM IC652 operation)
C	1/4 division detector output used in detection of RF and focus signal
CBRAKE	PWM driver brake control signal (brake on when "L")
CLAMP+	Clamp motor drive signals
CLAMP−	
CM+	Carriage motor drive signal (PWM OUT)
CM−	
CONT	PWM driver ON/OFF signal (ON when "H")
D	1/4 division detector output used in detection of RF and focus signal
DEEM	Emphasis selector switch (emphasis ON when "H")
DFCT	DEFECT signal ("H" when defect)
DGND	Digital ground
DISC	Disc presence detector signal
E	Tracking signal start detector
EFM	8-14 modulation
EJ	Eject key
EJP	Magazine position detector signal (eject position when "L")
ELV+	Elevation motor drive signals
ELV−	
END	Carriage mechanism END position detector signal
F	Tracking signal end detector
FA+	Focus actuator drive signal (PWM OUT)
FA−	
FAIN	Focus drive PWM input signal
FEO	Focus signal output (IC601, CXA1082AQ pin no.5)

Symbol	Function
FEO2	Focus 2 (IC655 pin no.7)
FLOAT	Carriage mechanism play position detector signal
HOME	Home position detector signal (pick-up at home position when "L")
IN1	Motor control signal 1
IN2	Motor control signal 2
IN3	Motor control signal 3
ISETY	ISET resistance pin (IC601 pin no.31)
LAMP	Photo-interrupter drive signal
LD	Laser diode
LOAD	Magazine loading power supply ON/OFF signal
MON	Motor ON (spindle forward or reverse when "H")
MAG	Magazine detector signal
MD	Monitor diode
$\overline{\text{MUTG}}$	Mute signal (muting ON when "L")
POWER	Power supply control signal
REG5	+5V
SLO	Carriage output signal (IC601 pin no.14)
SM+	Spindle motor drive signals (PWM OUT)
SM−	
SPC	Spindle motor rpm detector signal (low speed when "L", IC656 pin nos.1 & 7)
SPCO	Spindle brake (spindle brake when "H", IC751 pin no. 59)
SPDLO	Spindle motor error signal (IC601 pin no.39)
SPTAO	Tracking side path signal output
SMIN	Spindle motor drive PWM input signal
STBY	Standby position detector signal
TA+	Tracking actuator drive signals (PWM OUT)
TA−	
TAIN	Tracking actuator drive PWM input signal
TEND	Mechanism clamped switching line
TGU	Tracking side path input
TIN	Tray position detector signal (tray housed when "L")
TIG	Switch ground
TOG	Switch ground
TOUT	Tray position detector signal (tray ejected when "H")
TRAY+	Tray motor drive signals
TRAY−	
TSEL	Magazine position detector signal
TZC	T.E zero-cross signal
VC	Signal reference voltage (2.5V)
VREF	Signal reference voltage buffer output (2.5V)

http://www.manualscenter.com

- **LCD : CWW1161 (UC)**

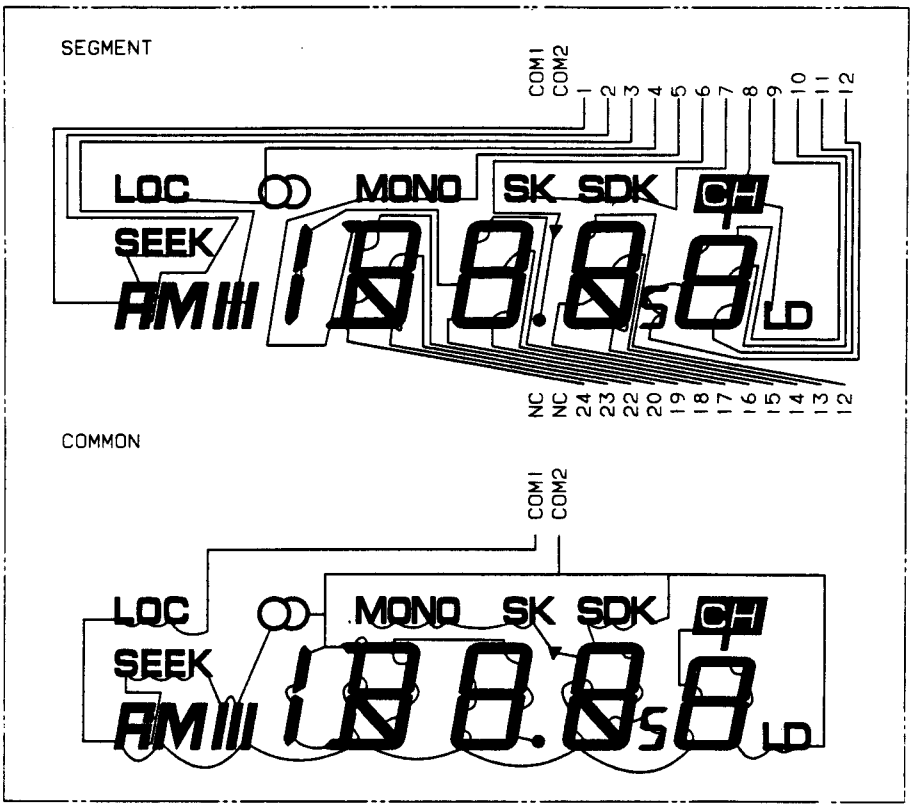

- **LCD : CWW1203 (WG, EW)**
  CWW1162 (EI)

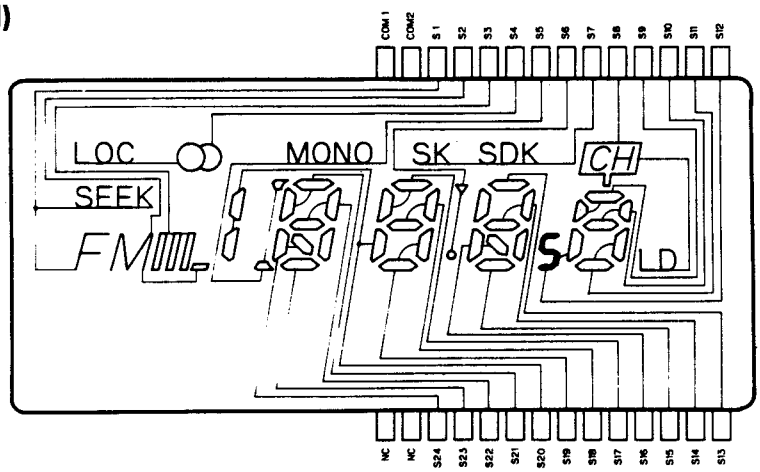

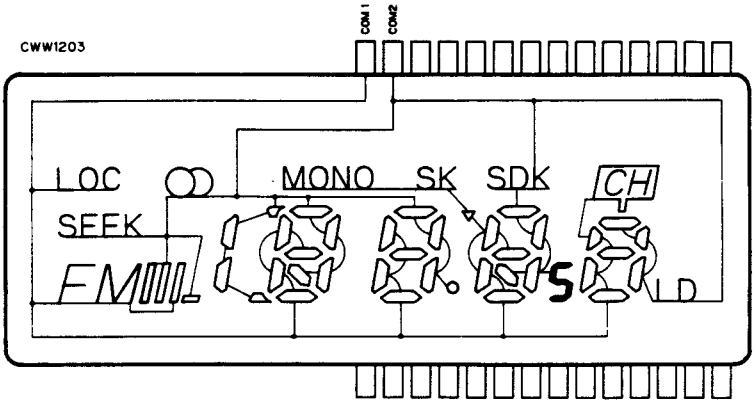

Note: 1. The encircled numbers denote measuring points in the circuit diagram.
2. Reference voltage.
G: GND VC: Pin 14 of CXA1081M (2.5V)

• Wave Forms

① CH1: RFO 0.4V/div.
② CH2: MIRR 2V/div.
0.4ms/div.
Test mode: Tracking open

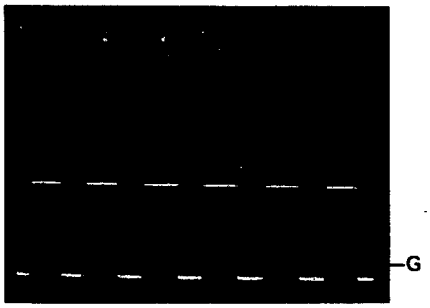

⑦ CH1: FEY 1V/div.
⑧ CH2: SENS 2V/div.
4ms/div.
Normal mode: Focus close (The lens moves DOWN → UP)

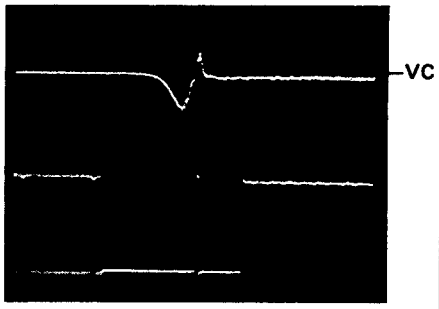

⑨ CH1: TEY 0.4V/div.
⑪ CH2: TAO 0.4V/div.
4ms/div.
Normal mode: Track search (80 track jump)

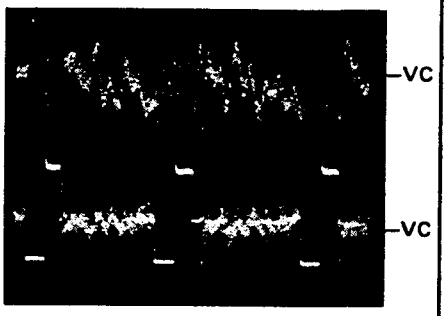

① CH1: RFO 1V/div.
③ CH2: DEFECT 2V/div.
0.4ms/div.
Normal mode: The defect part passes 800μm.

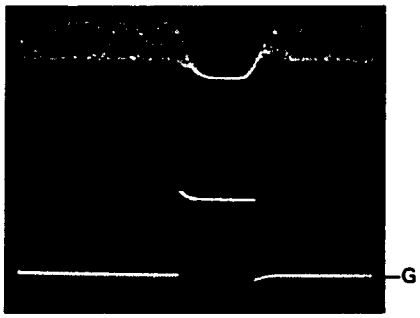

⑨ CH1: TEY 0.4V/div.
⑩ CH2: TZC 0.4V/div.
0.4ms/div.
Test mode: Tracking open

⑫ CH1: SLO 0.4V/div.
⑬ CH2: ATSC 0.02V/div.
2S/div.
Normal mode: PLAY

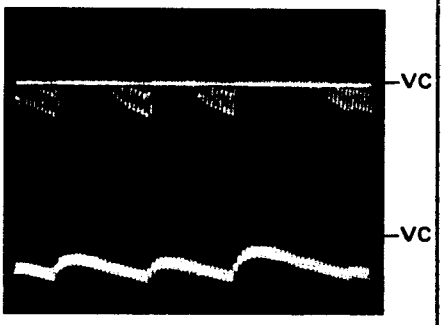

④ CH1: FEO 0.2V/div.
⑤ CH2: Pin 7 of CXA1082AQ 0.04V/div.
0.4S/div.
Test mode: Connect the FOK2 to GND. Focus search is performed. (CH2 is the same phase as the lens movement.)

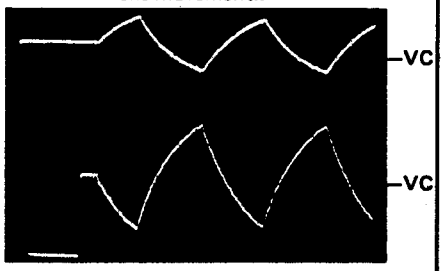

⑨ CH1: TEY 0.4V/div.
⑪ CH2: TAO 0.4V/div.
2ms/div.
Normal mode: Brake wave form when track search is performed.

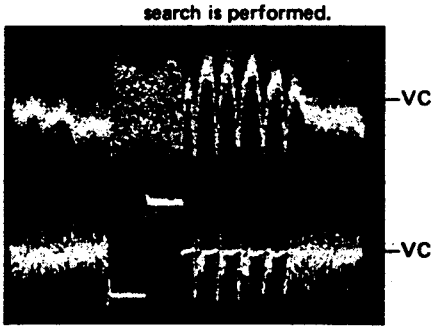

① RFO 0.5V/div.
200ns/div.
Normal mode: PLAY

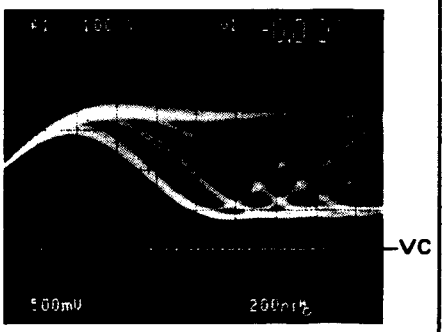

⑥ CH1: FOK2 2V/div.
④ CH2: FEO 0.2V/div.
0.2S/div.
Normal mode: Focus close

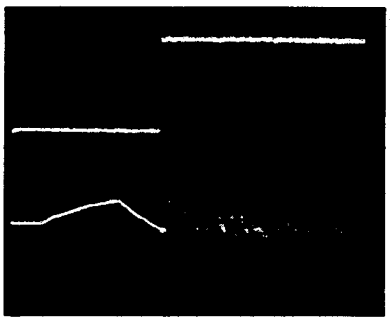

⑨ CH1: TEY 0.4V/div.
⑪ CH2: TAO 0.4V/div.
0.4ms/div.
Test mode: Single jump

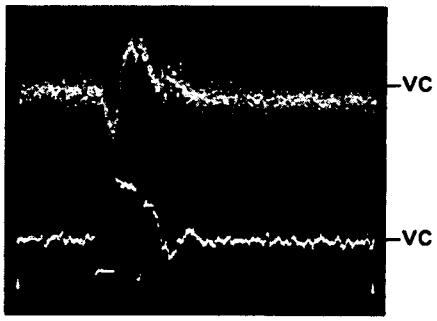

⑦ CH1: FEY 0.5V/div.
⑭ CH2: FEO2 0.5V/div.
20ms/div.
Normal mode: PLAY

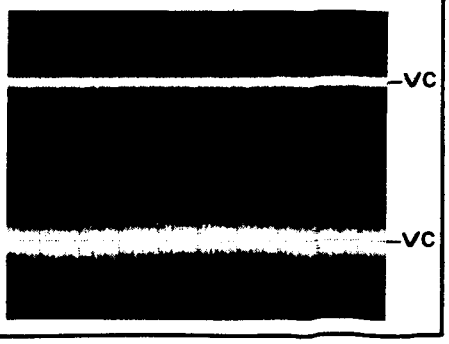

⑨ CH1: TEY 0.5V/div.
⑪ CH2: TAO 0.5V/div.
20ms/div.
Normal mode: PLAY

⑰ MDS 2V/div. 50μs/div.
PLAY

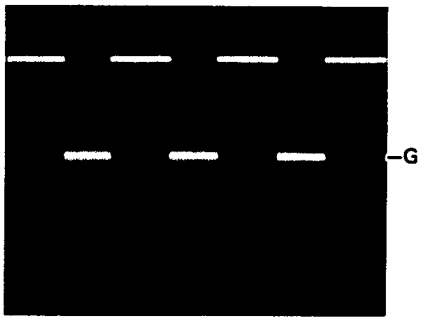

⑲ GFS 2V/div. 200μs/div.
PLAY

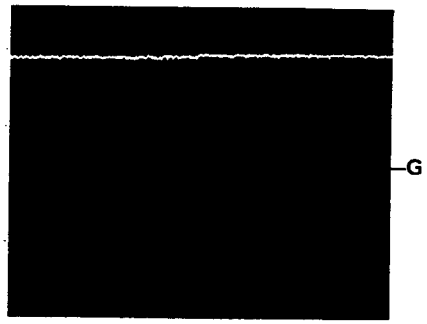

⑮ SPDLO 2V/div. 50ms/div.
PLAY

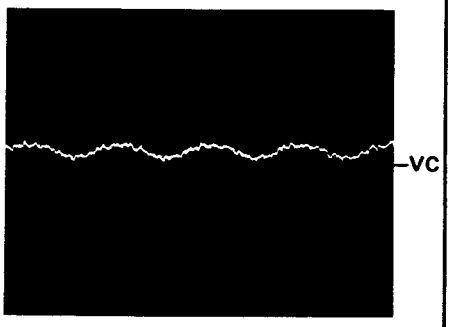

⑰ MDS 2V/div. 50μs/div.
SEARCH

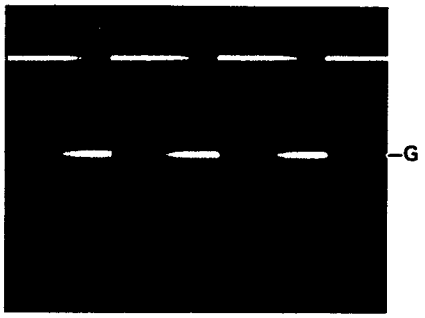

⑲ GFS 2V/div. 20ms/div.
SEARCH

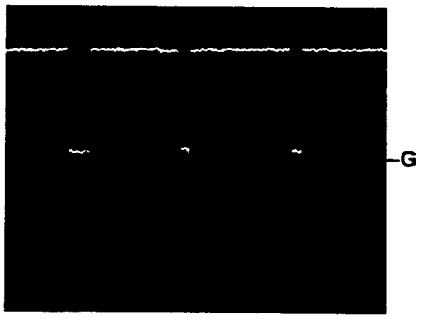

⑮ SPDLO 2V/div. 50ms/div.
SEARCH

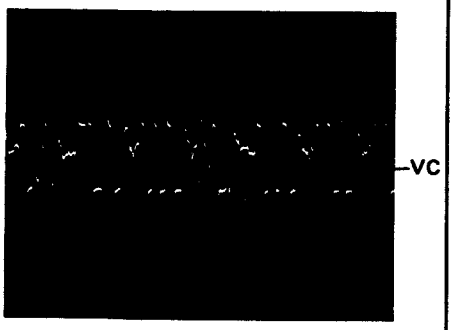

⑱ MDP 2V/div. 200μs/div.
PLAY

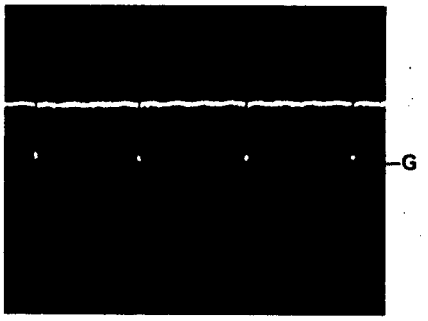

⑳ VCOO 2V/div. 0.2μs/div.
PLAY

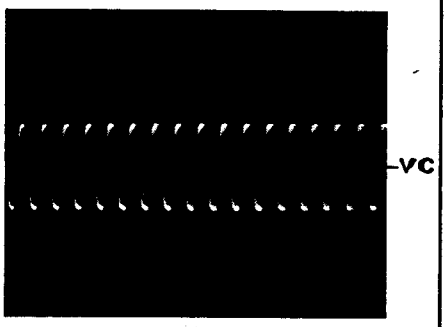

⑯ EFM 2V/div. 0.5μs/div.
PLAY

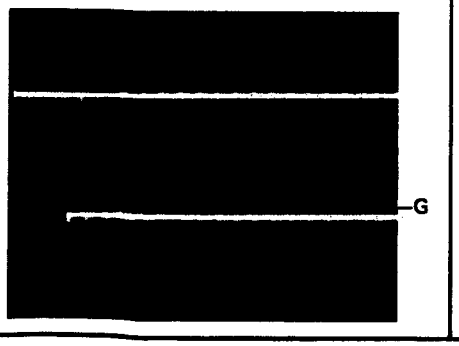

⑱ MDP 2V/div. 10ms/div.
SEARCH

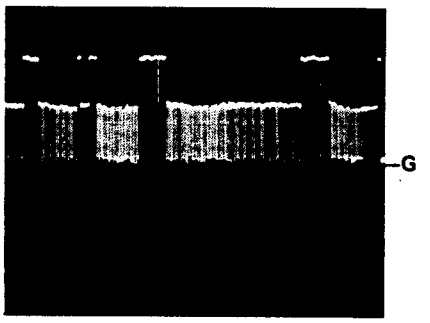

㉑ PLCK 2V/div. 0.2μs/div.
PLAY

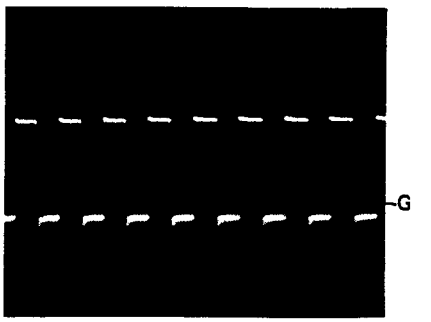

㉒ BCLK 2V/div.
0.2μs/div.

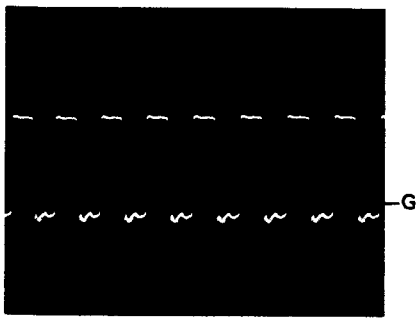

㉕ L or R L.P.F. 0.5V/div.
0.2ms/div.
PLAY (1kHz: FS)

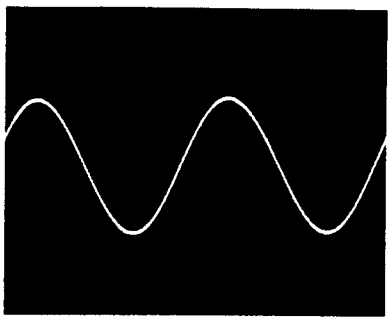

㉖ DATA 2V/div.
0.2μs/div.

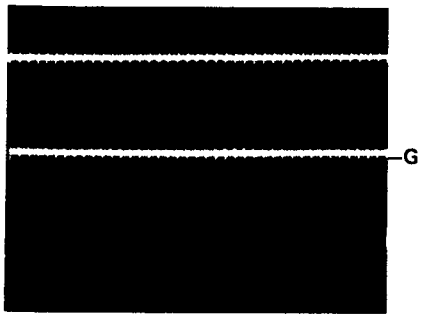

㉓ LRCK 2V/div.
5μs/div.
PLAY

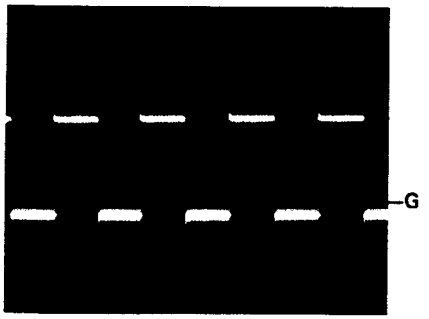

㉔ L or R OUT 0.5V/div.
0.2ms/div.
PLAY (1kHz: FS)

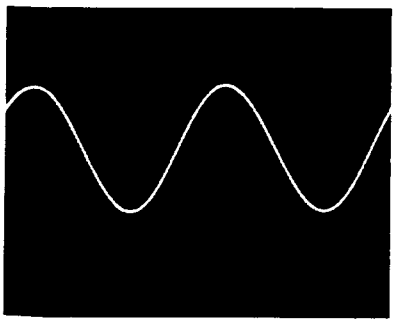

http://www.manualscenter.com

19. EXPLODED VIEW

NOTE:

- *For your Parts Stock Control, the fast moving items are indicated with the marks ★★ and ★.*
  ★★: GENERALLY MOVES FASTER THAN ★.
  This classification shall be adjusted by each distributor because it depends on model number, temperature, humidity, etc.
- *Parts whose parts numbers are omitted are subject to being not supplied.*
- *Parts marked by "◉" are not always kept in stock. Their delivery time may be longer than usual or they may be unavailable.*

- **Parts List**

Mark	No.	Part No.	Description
	1	BMZ30P050FMC	Screw
	2		Case
	3		Insulator
	4	CBA1094	Transportation Screw
	5	CRP1031	Caution Card
	6	CNM1877	Seal
	7	CDE1774	Cord
	8	BPZ20P050FMC	Screw
◉	9	CWX1117	Display Unit(UC)
◉		CWX1124	Display Unit(WG)
◉		CWX1121	Display Unit(EW)
◉		CWX1125	Display Unit(EI)
	10		Cushion
	11	CNP1656	P.C.Board
	12	CNP1655	P.C.Board
	13	CSS1023	Xtal Resonator
	14	CNM1855	Insulator
★★	15	CEL1038	Lamp(UC,WG,EW)
★★		CEL1037	Lamp(EI)
	16		Film
	17		Shield Plate
	18		Holder
	19		Lens
	20	CWW1161	LCD(UC)
		CWW1203	LCD(WG,EW)
		CWW1162	LCD(EI)
	21		Case
	22		Cushion
★	23	CAC1621	Button
★	24	CAC1620	Button
★	25	CAC1614	Button
★	26	CAC1615	Button
★	27	CAC1616	Button
★	28	CAC1617	Button
★	29	CAC1618	Button
★	30	CAC1619	Button
	31	CXA2504	Grille Unit(UC)
		CXA2506	Grille Unit(WG)
		CXA2505	Grille Unit(EW,EI)
	32	PVZ14P045FZK	Screw
	33		Holder
	34		Cover
	35		Lens
	36		Lens
★	37	CAC1622	Button
	38		Cushion
	39		Cushion
★	40	CAC1608	Button
★	41	CAC1609	Button
★	42	CAC1613	Button
★	43	CAC1610	Button
★	44	CAC1611	Button
★	45	CAC1612	Button
	46	BMZ30P050FMC	Screw
	47		Case
	48	CEG1037	Cover
	49	CDE1894	Cord(UC)
		CDE1895	Cord(WG,EW,EI)
◉	50	CWR1018	Power Supply Unit(UC)
◉		CWR1017	Power Supply Unit (WG,EW,EI)
	51		Bracket
	52		Insulator
★★	53	AN7805R	IC
★★	54	AN6540	IC
	55	CKS-462	Plug
	56	BMZ30P060FMC	Screw
	57		Plug

- **Part List**

Mark	No.	Part No.	Description
	1	BMZ26P030FMC	Screw
	2		Bracket
	3	CLA1311	Collar
	4	CBA1062	Screw
	5	CBH1182	Spring
	6	CNV1641	Holder
	7		Arm
	8	CBH1137	Spring
	9	CBA1076	Screw
	10		P.C.Board
	11		Bracket Unit
	12		Chassis Unit
	13		Cushion
	14	CBA1075	Screw
	15	CXA2148	Damper Unit
	16	CBH1139	Spring
	17	CNV1633	Holder
	18	YE20FUC	Washer
	19	CNV1631	Cam
	20	CBF-166	Washer
	21		Bracket
	22	CNV1636	Roller
	23		Guide
	24		Arm Unit
	25	CBH1135	Spring
	26	CNV1884	Bearing
	27	CBA1070	Screw
★★	28	CSN1004	Switch(Disc Set)
	29	CNV1644	Holder
	30	HBA-175	Screw
★★	31	CXM2129	Motor Unit(Loading)
	32		Bracket
	33	CKS-719	Connector
	34	CKS-721	Connector
★	35	SLH-34VC3F	LED
	36	CNV1639	Holder
	37		Connector
	38	CNP1711	P.C.Board
	39	YE15FUC	Washer
	40		Arm Unit
	41	CLA1472	Collar
	42		Lever
	43	CLA1309	Collar
	44	CNV1630	Gear
	45		Arm Unit

Mark	No.	Part No.	Description
	46		Holder
	47		Spacer
	48		Arm Unit
	49	CBH1134	Spring
	50	CNM1792	Spacer
	51		Lever Unit
	52		Bracket
	53	CNV1634	Roller
	54	CBF1002	Washer
	55	CBH1133	Spring
	56		Bracket Unit
	57	CNV1632	Bearing
	58	CBH1181	Spring
	59		Arm Unit
	60	CNV1628	Gear
	61	CNV1627	Gear
	62	CNV1629	Gear
	63	CXA2456	Gear Unit
	64		Bracket Unit
	65	CNY-265	Cushion
◉	66	CXA1910	Carriage Unit
	67	CBH1136	Spring
	68		Arm Unit
	69		Spacer
	70	CNR1079	Ball
	71	CNV1643	Clamper
	72		Guide
	73		Chassis Unit
	74	CNC1738	Holder
	75	CNC1739	Holder
	76	PMS20P030FMC	Screw
	77	HBA-163	Screw
	78	CBH1138	Spring
	79		Bracket Unit
	80		Holder Unit
	81	CBA-098	Screw
	82		Bracket
★★	83	CXA2133	Motor Unit(Carriage)
	84	CBH1104	Spring
	85	CNV1844	Spacer
	86	CNV1780	Holder
	87	CNV1674	Holder
★★	88	CSN-094	Switch(Home)
★★	89	CXM1033	Motor Unit(Spindle)
★★	90	CNT1020	Belt

20. CD MECHANISM EXPLODED VIEW

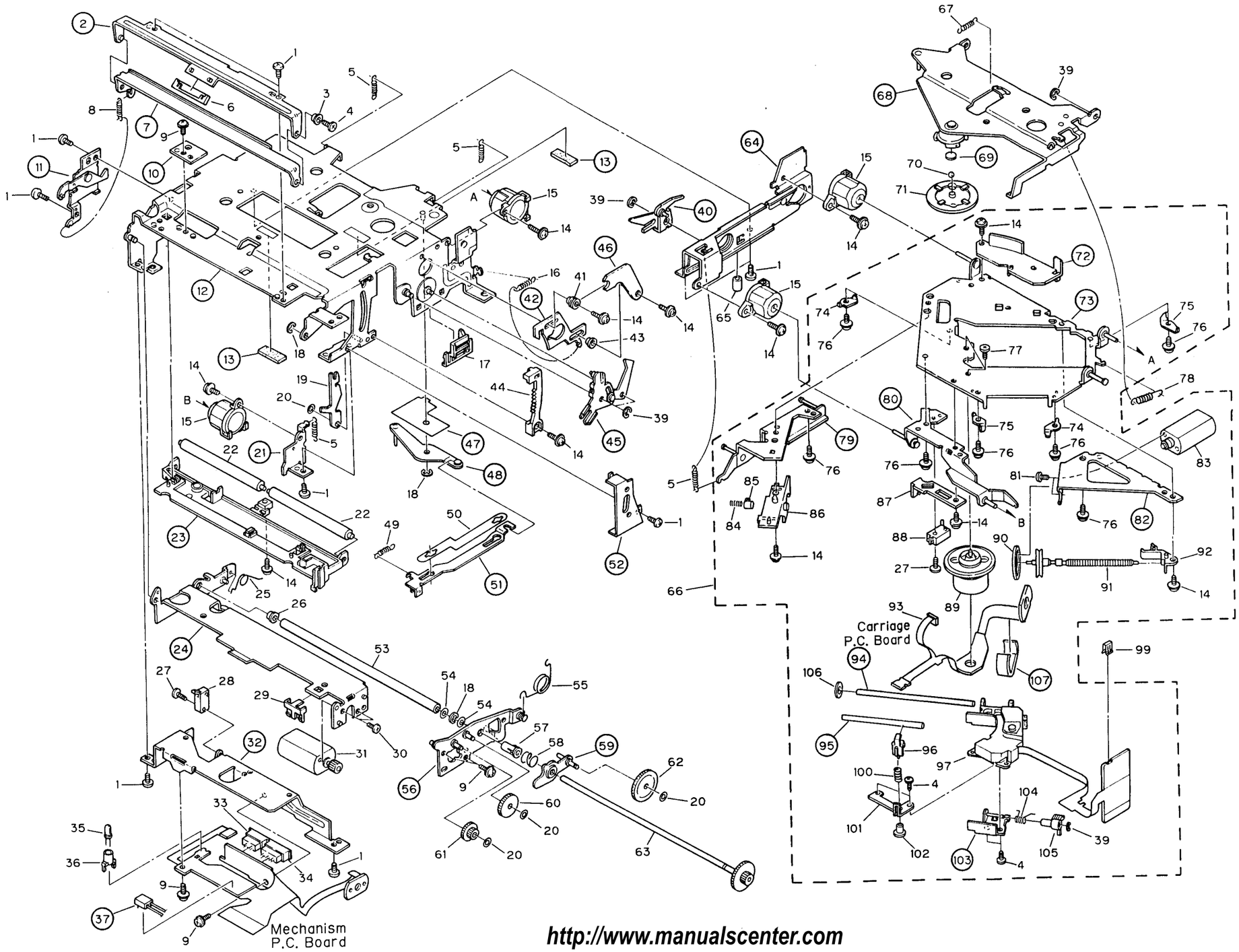

http://www.manualscenter.com

Fig. 53

21. ELECTRICAL PARTS LIST

NOTE:

- *For your parts Stock Control, the fast moving items are indicated with the marks ‡‡ and ‡.*
  ‡‡ : GENERALLY MOVES FASTER THAN ‡.
  This classification shall be adjusted by each distributor because it depends on model number, temperature, humidity, etc.
- *Parts whose parts numbers are omitted are subject to being not supplied.*
- *The part numbers shown below indicate chip components.*
  Chip Resistor
  RS1/8S□□□J, RS1/10S□□□J
  Chip Capacitor (except for CQS.....)
  CKS....., CCS....., CSZS.....

Unit Number :
Unit Name : AM Unit(UC, EW, EI)

MISCELLANEOUS

Mark	Circuit Symbol & No.	Part Name	Part No.
‡‡	IC 201		PA4010
‡‡	Q 201		2SK435
‡‡	Q 202		2SC2458
‡‡	Q 203 204 205		DTC124ES
‡	D 201 202		1S2473VH
‡	D 203		SVC203-AB
‡	D 204 205		1SS133
	L 201	Ferri-Inductor 1mH	CTF1026
	L 202	Ferri-Inductor 22μH	LAU220K
	L 203	Ferri-Inductor 47μH	LAU470K
	L 204	Ferri-Inductor 4.7μH	LAU4R7K
	T 201	Coil	CTB1020
	T 202	Coil	CTB1004
	T 203	Coil	CTB1022 (CTB1021)
	T 204	Coil	CTE1013 (CTE1006)
	T 205	Coil	CTE1014 (CTE1007)
	T 206	Coil	CTE1015 (CTE1008)
	X 201	Xtal	CSS1014
	CF 201	Filter	CTF1027 (CTF1041)
	CF 202	Filter	CTF-100

RESISTORS

Mark	Circuit Symbol & No.	Part Name	Part No.
	R 201		RS1/10S220J
	R 202		RS1/10S681J
	R 203 206		RS1/10S222J
	R 204		RS1/10S473J
	R 205		RS1/10S470J
	R 207		RS1/10S822J
	R 208 211		RS1/10S103J
	R 209		RD1/4PS470JL
	R 210		RS1/10S682J
	R 212		RS1/8S223J
	R 213		RD1/4PS222JL

CAPACITORS

Mark	Circuit Symbol & No.	Part Name	Part No.
	C 201 209 223 228		CKSQYB103K50
	C 202 212		CKSQYB332K50
	C 203 215 216 219 226		CKSQYF473Z50
	C 204 208 210		CKSQYB223K50
	C 206 207		CCSQCH820J50
	C 211		CEA010M50LL
	C 213		CCSQCH470J50
	C 218		CEA2R2M35NPLL
	C 220		CCSQCH430J50
	C 221		CCSQCH100D50

Mark	No.	Part No.	Description
	91	CXA2375	Screw Unit
	92	CNV1781	Holder
	93	CNP1709	P.C.Board
	94		Shaft
	95		Shaft
	96	CNV1512	Holder
	97	CGY1007	PU Unit
	98	.....	
	99	CBL1010	Short Pin
	100	CBH1105	Spring

Mark	No.	Part No.	Description
	101	CNC1736	Holder
	102	CLA1319	Screw
	103		Holder Unit
	104	CBH1106	Spring
	105	CNV1513	Rack
	106	CNV1863	Cushion
	107		Cover

Mark	Circuit Symbol & No.	Part Name	Part No.
	C 222		CSZA010K25
	C 224		CEA470M16LL
	C 225		CKSQYB333K25
	C 227		CEA4R7M35LL
	C 229		CEA470M16LL
	C 230		CEA220M6R3LL
	C 232		CCSQCH220J50

Unit Number :
Unit Name : FM Unit(UC, EW, EI)

MISCELLANEOUS

Mark	Circuit Symbol & No.	Part Name	Part No.
##	IC 1(UC)		CWW1075 (CWW1076)
##	IC 51		LA1140B
##	IC 101		LA2110
##	IC 151		LA3430P
##	Q 1	Chip Transistor	2SA1162 (2SA1179)
##	Q 2	Chip Transistor	DTC124EK
##	Q 51	Chip Transistor	2SC2712 (2SD601)
##	Q 71	Chip Transistor	2SJ106
#	D 151		1S2473VH
	L 1 51	Inductor 15μH	LAU150K
	T 51	Coil	CTC1029
	X 151	Ceramic Oscillator	CSS1028 (CSS1022)
	CR 101		CWW-107
	CF 51 52	Ceramic Filter	CTF-182
##	VR 1(UC)	Semi-fixed 33kΩ(B)	CCP-325
##	VR 1(EW, EI)	Semi-fixed 10kΩ(B)	CCP-322
##	VR 101	Semi-fixed 10kΩ(B)	CCP-322
##	VR 151	Semi-fixed 150kΩ(B)	CCP-329
##	VR 152	Semi-fixed 15kΩ(B)	CCP-323
		Front End Unit	CWB1032

RESISTOS

Mark	Circuit Symbol & No.	Part Name	Part No.
	R 2 7 152		RS1/10S223J
	R 3(UC)		RS1/10S473J
	R 4 58 104		RS1/10S682J
	R 5(UC)		RS1/10S0R0J
	R 5(EW, EI)		RS1/10S471J
	R 6(UC)		RS1/8S153J
	R 6(EW, EI)		RS1/8S681J
	R 21(EW, EI) 22(EW, EI)		RS1/8S0R0J
	R 23		RS1/10S0R0J
	R 51		RS1/8S0R0J
	R 52		RS1/10S331J
	R 53 57		RS1/10S473J
	R 54		RS1/10S104J
	R 55 60		RS1/10S153J
	R 56		RS1/8S123J
	R 59		RD1/4PS183JL
	R 61 62		RS1/10S472J
	R 71		RS1/10S474J
	R 101		RS1/10S332J
	R 102		RS1/10S392J
	R 103		RS1/10S183J
	R 151		RS1/10S222J
	R 153		RS1/8S472J
	R 156(UC) 157(UC)		RS1/10S202J
	R 156(EW, EI) 157(EW, EI)		RS1/10S332J
	R 158		RS1/10S334J

CAPACITORS

Mark	Circuit Symbol & No.	Part Name	Part No.
	C 1		CKSQYB102K50
	C 2 101 102		CKSQYB103K25
	C 4 51 52 53 54 59		CKSQYF473Z50
	C 55 62		CCSQSL330J50
	C 56 63		CEAR47M50LS2
	C 57		CKSQYF104Z25
	C 58 156		CEA010M50LS2
	C 60		CCSQSL101J50
	C 61		CEA4R7M16NPLL
	C 70		CCSQCH200J50
	C 103 105 161		CEA470M16LS
	C 104		CKSQYB182K50
	C 151		CKSYF473Z50
	C 152		CKSQYB332K50
	C 153		CKSQYB223K25
	C 154		CKSQYB153K25
	C 155		CEA3R3M50LS
	C 157		CSZAR22M35
	C 158(EW, EI)		CCSQSL681J50
	C 159(UC) 160(UC)		CKSYB393K25
	C 159(EW, EI) 160(EW, EI)		CKSYB183K25

Unit Number :
Unit Name : Tuner Unit(SDK/WG)

MISCELLANEOUS

Mark	Circuit Symbol & No.	Part Name	Part No.
##	IC 51		LA1140B
##	IC 101		KHA115
##	IC 151		MX3S400
##	IC 201		PA4010
##	IC 801		KHA142
##	Q 1	Chip Transistor	2SA1162 (2SA1179)
##	Q 2	Chip Transistor	DTC124EK
##	Q 51	Chip Transistor	2SC2712 (2SD601)
##	Q 71		2SJ105
##	Q 201		2SK435
##	Q 202		2SC2458
##	Q 203 204 205		DTC124ES
#	D 151	Chip Diode	MA151WA
#	D 201 202		1S2473VH
#	D 203		SVC203-AB
#	D 204 205		1SS133
	L 1 51	Inductor 15μH	LAU150K
	L 201	Ferri-Inductor 1000μH	CTF1026

http://www.manualscenter.com

Mark	Circuit Symbol & No.	Part Name	Part No.
	L 202	Ferri-Inductor 22μH	LAU220K
	L 203	Ferri-Inductor 47μH	LAU470K
	L 204	Ferri-Inductor 4.7μH	LAU4R7K
	T 51	Coil	CTC1029
	T 201	Coil	CTB1020
	T 202	Coil	CTB1004
	T 203	Coil	CTB1022 (CTB1021)
	T 204	Coil	CTE1013 (CTE1006)
	T 205	Coil	CTE1014 (CTE1007)
	T 206	Coil	CTE1015 (CTE1008)
	X 201	Xtal	CSS1014
	X 801	Ceramic Oscillator	CSS1019
	G 501		DSP-201M-S00B
	CF 51 52	Ceramic Filter	CTF-182
	CF 201	Filter	CTF1027 (CTF1041)
	CF 202	Filter	CTF-100
##	VR 1	Semi-fixed 10kΩ(B)	CCP-322
##	VR 101 152	Semi-fixed 15kΩ(B)	CCP-323
##	VR 151	Semi-fixed 150kΩ(B)	CCP-329
		Front End Unit	CWB1032

RESISTORS

Mark	Circuit Symbol & No.	Part Name	Part No.
	R 2		RS1/8S223J
	R 4		RS1/8S682J
	R 5		RS1/8S471J
	R 6		RS1/10S681J
	R 7		RS1/10S223J
	R 23 51		RS1/10S0R0J
	R 52		RS1/10S331J
	R 53 57 802		RS1/10S473J
	R 54		RS1/10S104J
	R 55 60		RS1/10S153J
	R 56		RS1/10S123J
	R 58		RS1/10S682J
	R 59		RD1/4PS183JL
	R 61 62		RS1/10S472J
	R 71		RS1/10S474J
	R 101		RS1/10S332J
	R 102		RS1/8S183J
	R 103		RS1/8S562J
	R 201		RS1/10S220J
	R 202		RS1/10S681J
	R 203 206		RS1/10S222J
	R 204		RS1/10S473J
	R 205		RS1/10S470J
	R 207		RS1/10S822J
	R 208 211		RS1/10S103J
	R 209		RD1/4PS470JL
	R 210		RS1/10S682J
	R 212		RS1/8S223J
	R 213		RD1/4PS222JL
	R 801		RS1/10S222J

CAPACITORS

Mark	Circuit Symbol & No.	Part Name	Part No.
	C 1		CKSQYB102K50
	C 2 802		CKSQYB103K50
	C 4 54		CKSYF473Z50
	C 51 52 53 59		CKSQYF473Z50
	C 55 62		CCSQSL330J50
	C 56 63		CEAR47M50LS2
	C 57		CKSQYF104Z25
	C 58		CEA010M50LS2
	C 60		CCSQSL101J50
	C 61		CEA4R7M16NPLL
	C 70		CCSQCH200J50
	C 101 105 161		CEA470M16LS
	C 152		CKSQYB332K50
	C 154		CKSQYB153K25
	C 159 160		CKSYB123K50
	C 201 209 223 228		CKSQYB103K50
	C 202 212		CKSQYB332K50
	C 203 215 216 219 226		CKSQYF473Z50
	C 204 208 210		CKSQYB223K50
	C 206 207		CCSQCH820J50
	C 211		CEA010M50LS2
	C 213		CCSQCH470J50
	C 218		CEA2R2M35NPLL
	C 220		CCSQCH430J50
	C 221		CCSQCH100D50
	C 222		CSZA010K25
	C 224		CEA470M16LS
	C 225		CKSQYB333K25
	C 227		CEA4R7M35LS
	C 229		CEA470M16LS
	C 230		CEA220M6R3LL
	C 232		CCSQCH220J50
	C 801		CQMA683J50
	C 803	220μF/10V	CCH1015
	C 804		CEA4R7M35LS
	C 805		CEA220M16LS
	C 806		CSZAR33M35

Unit Number :
Unit Name : CD Unit

MISCELLANEOUS

Mark	Circuit Symbol & No.	Part Name	Part No.
##	IC 351		CXA1081M
##	IC 451		M5218FP
##	IC 452		KHA215
##	IC 501		LC7218M
##	IC 601		CXA1082AQ
##	IC 651 652		PA3023
##	IC 655 657		M5218FP
##	IC 656		M5233FP
##	IC 701		CXD1135Q
##	IC 702		CXK5816M
##	IC 703		μPD6355C
##	IC 704		KHA220
##	IC 751		PD4136A
##	IC 752		M51955AFP
##	IC 753 881		M51945AFP

Mark	Circuit Symbol & No.	Part Name	Part No.
##	IC 754		M54546AL
##	IC 851		M5228FP
##	IC 882		PDG011
##	Q 351		2SB822F
##	Q 451(SDK/WG) 452(SDK/WG)	Chip Transistor	DTC343TK
##	Q 453(SDK/WG)	Chip Transistor	UN5210
##	Q 454(SDK/WG) 455(SDK/WG)	Chip Transistor	2SD1819
##	Q 502	Chip Transistor	2SC3295
##	Q 503 504 505 506	Chip Transistor	2SC4116
##	Q 507(SDK/WG, EW, EI)	Chip Transistor	DTC124EU
##	Q 508 509	Chip Transistor	DTA124EU
##	Q 510 511	Chip Transistor	DTC114TU
##	Q 512 513	Chip Transistor	RN2427
##	Q 514 758		2SD1228M
##	Q 515(SDK/WG)		2SD1228M
##	Q 601 651 652 653 701 705 756 760	Chip Transistor	UN2211
##	Q 702 706 759		UN2111
##	Q 703 704	Chip Transistor	2SD1048
##	Q 757		2SD1228M
##	Q 851 852 855 856	Chip Transistor	DTC343TK
##	Q 853	Chip Transistor	2SD1819
##	Q 854 884	Chip Transistor	DTA114EU
##	Q 882 883	Chip Transistor	DTC114EU
##	Q 885	Chip Transistor	UN5210
#	D 451(SDK/WG)	Chip Diode	MA141WA
#	D 452 453 505		MA3056
#	D 501 502 503	Chip Diode	MA141WK
#	D 504		MA143
#	D 506 851 852	Chip Diode	MA141WA
#	D 651		ERA15-02
#	D 652 653		ERA82-004Y
#	D 654 655 656 657 658 659		ERA82-004VH
#	D 661 662		HZS2ALL
#	D 701	Chip Diode	MA151WA
#	D 702	Chip Diode	MA151K
#	D 753		MA3200
#	D 754		HZ6LB1
#	D 755		MA3062
	L 501	Ferri-Inductor 47μH	LAU470K
	L 651	Chok Coil 220μH	CTH1035
	TH 351	Thermistor	CCX1001
	TH 751	Thermistor	CCX-021
##	VR 351	Semi-fixed 47kΩ(B), 10kΩ(B)×2	CCP1005
##	VR 352	Semi-fixed 47kΩ(B)×4	CCP1006
##	VR 604	Semi-fixed 2.2kΩ(B)	HCP-267
##	VR 651	Semi-fixed 47kΩ(B)	HCP-275
	G 501(EW, EI)		DSP-201M-S008
	IB 851(UC)		CWW1097
	IB 851(SDK/WG, EW, EI)		CWW1096
	IB 852		CWW1096
	X 501	Xtal	CSS1030
	X 701	Xtal	CSS1027
	X 751	Ceramic Oscillator	CSS-042
		Buzzer	CPV1005

RESISTORS

Mark	Circuit Symbol & No.	Part Name	Part No.
	R 351		RS1/2P220JL
	R 353 381 536 540 708 709 851 852 881		RS1/10S102J
	R 354 363 378		RS1/10S223J
	R 355 610 625 785		RS1/10S113J
	R 356 357 358 359 669		RS1/10S563J
	R 360 361		RS1/10S124J
	R 362 763		RS1/10S564J
	R 364 365 618 671		RS1/10S105J
	R 366 377 666		RS1/10S562J
	R 367		RS1/10S104J
	R 379 515 525 710 711 722 723		RS1/10S472J
	R 380 617 628 682		RS1/10S203J
	R 382		RS1/10S363J
	R 383		RS1/10S823J
	R 384 630		RS1/10S273J
	R 451 452		RS1/10S562J
	R 453 454		RS1/10S433J
	R 455 456 505 521 527 529 537 673 865		RS1/10S473J
	R 457(SDK/WG)		RS1/10S103J
	R 458(SDK/WG) 459(SDK/WG)		RS1/10S104J
	R 460 461 462 853 854 859 860		RS1/10S223J
	R 463 464 501 502 503 504 523 530 532		RS1/10S222J
	R 506 533 609 614 619 627 773 774		RS1/10S104J
	R 511(SDK/WG, EW, EI)		RS1/10S561J
	R 512(SDK/WG, EW, EI)		RS1/10S332J
	R 513 517 526 528 531 775		RS1/10S103J
	R 514		RS1/10S122J
	R 516 524 634		RS1/10S474J
	R 518 667 684 686 717		RS1/10S472J
	R 519 629		RS1/10S153J
	R 520		RS1/10S393J
	R 522		RS1/10S221J
	R 534 535 538 714 724 725 726 727 728		RS1/10S0R0J
	R 541(SDK/WG)		RS1/10S221J
	R 542(UC)		RS1/10S392J
	R 601 602		RS1/10S101J
	R 606		RS1/10S224J
	R 607 764		RS1/10S883J
	R 608		RS1/10S823J
	R 611		RS1/10S432J
	R 612		RS1/10S623J
	R 613		RS1/10S624J
	R 616		RS1/10S183J
	R 620		RS1/10S332J
	R 621		RS1/10S184J
	R 622 670 687 696 697 715 718 719 751 752		RS1/10S103J
	R 623 765		RS1/10S473J
	R 624 882		RS1/10S393J
	R 631		RS1/10S272J
	R 665 790		RS1/10S821J
	R 668 679		RS1/10S392J
	R 672		RS1/10S364J
	R 674 716		RS1/10S332J
	R 676 677 799		RS1/10S201J
	R 678		RS1/10S223J

Mark	Circuit Symbol & No.	Part Name	Part No.
R	680		RS1P1R5JL
R	681		RS1/10S203J
R	683		RS1/10S101J
R	685 692		RS1/10S105J
R	690		RS1/10S272J
R	691 703 755 855		RS1/10S103J
R	694 786		RS1/10S822J
R	701		RS1/10S100J
R	712 713		RS1/10S392J
R	721		RS1/10S4R7J
R	753 754 756 766 767 779		RS1/10S681J
R	762		RS1/10S391J
R	770 771		RS1/10S222J
R	778 788		RS1/10S0R0J
R	781		RS1/10S303J
R	782		RS1/10S154J
R	856(UC)		RS1/10S0R0J
R	856(SDK/WG, EW, EI)		RS1/10S101J
R	857 858 866		RS1/10S102J
R	867(UC) 868(UC)		RS1/10S0R0J
R	883		RS1/10S204J
R	884 885 886		RS1/10S222J
R	889(UC)		RS1/10S0R0J
R	890 891 892 893		RS1/10S6R8J

CAPACITORS

Mark	Circuit Symbol & No.	Part Name	Part No.
C	351 719 720		CEA101M6R3LS
C	352 611 625 626 662 664 713 724 727 751		CKSQYB103K50
C	353 613 666		CKSYB333K25
C	354 357		CASA330M6R3
C	355 667 668 714		CKSQYB103K50
C	356		CKSYB332K50
C	359 614		CEAR47M50LS
C	360 361		CSZS010M16
C	370 703 704		CCSQCH220J50
C	371 512 615		CKSQYB102K50
C	372		CCSQCH100D50
C	373 627		CCSQCH220J50
C	451 452 453 454		CEA4R7M50LS
C	455 456 602 653 708 709		CEA100M25LS
C	457 458 520 855 856 857 858		CEA101M10LS
C	459		CEA470M16LS
C	460 518 519 606		CEA220M16LS
C	461		CCSQCH330J50
C	462		CCSQCH330J50
C	501 502		CCSQCH270J50
C	503 510 511 513		CKSQYF473Z50
C	505		CCSQSL561J50
C	508(SDK/WG, EW, EI)		CSZSR68M20
C	509 517 728 729 754 758		CKSQYB103K50
C	514		CKSQYF104Z25
C	516 621		CEA4R7M16NPLL
C	521(SDK/WG)		CEA220M10LS
C	522(SDK/WG)		CEA470M16LS
C	601		CKSQYB222K50
C	603 607 612 716		CEA100M6R3LS
C	605 620 622 628 629		CKSYB473K25
C	608		CEA220M6R3NPLL
C	609 756		CKSQYB472K50
C	610 619		CCSQCH221J50
C	616		CEA220M6R3LS
C	617		CEA4R7M16LS
C	618		CKSQYB682K50
C	623		CKSQYB272K50
C	624		CCSQCH391J50
C	651 670		CKSYF224Z25
C	652	470μF/16V	CCH-114
C	654 658		CCSQCH221J50
C	656		CEA100M16LS
C	661 663		CEA010M50NPLL
C	665 678 852		CKSYB473K25
C	671 672		CSZSR68M20
C	674 705		CASA100M6R3
C	675 676		CEA2R2M35LS
C	677 679		CCSQSL681J50
C	680		CCSQSL681J50
C	681		CKSYB393K25
C	701 710 712 726		CASA6R8M6R3
C	702		CASA220M6R3
C	706 707		CCSQCH470J50
C	717 718		CEA470M6R3LS
C	722 723		CEA330M6R3LS
C	752		CCSQCH300J50
C	753		CCSQCH300J50
C	755		CEA101M6R3LS
C	757		CASA6R8M10
C	851(SDK/WG, EW, EI)		CKSYB473K25
C	853 854		CEA3R3M50LS
C	859		CEA220M6R3LS
C	861 862		CEA3R3M25LS
C	881		CKSQYB153K25

http://www.manualscenter.com

Unit Number :
Unit Name : Display Unit

MISCELLANEOUS(UC, SDK/WG, EW)

Mark	Circuit Symbol & No.	Part Name	Part No.
	IC 901(UC, EW)		PD4139A
	IC 901(SDK/WG)		PD4153A
	IC 902		NJM2903M
	Q 901		2SB822
	Q 902	Chip Transistor	UN5210
	Q 903 904 905 906 907	Chip Transistor	DTC124TU
	D 901(UC, EW)	Chip Diode	MA141WA
	D 901(SDK/WG)	Chip Diode	MA141A
	D 902(UC, SDK/WG) 903(UC, SDK/WG)	Chip Diode	MA141A
	D 902(EW) 903(EW)	Chip Diode	MA141WA
	D 904	Chip Diode	MA141A
	D 905	LED	LN260RCPX
	D 906 907	Chip Diode	MA141K
	D 908 909	LED	CL55UR/YORO
	D 910 911 912 913 914 915 916 917 918 919	LED	CL61YCD680
	D 920 921 922 925 928 929 931 933	LED	CL61YCD680
	D 923 924 926 927 930 932	LED	LN460YCPX
	L 901	Inductor 15μH	LAU150K
	S 901 902 903 904 905 906 907 908 909 910	Switch	CSG-255
	S 911 912 913 914 915 916 917 918 919 920	Switch	CSG-255
	S 921 922 923 924 925	Switch	CSG-255
	IL 901 902	Lamp 8V 60mA	CEL1038
	TC 901(UC)	Trimmer	CCL1012
		Xtal	CSS1023
		LCD(UC)	CWW1161
		LCD(SDK/WG, EW)	CWW1203

MISCELLANEOUS(EI)

Mark	Circuit Symbol & No.	Part Name	Part No.
‡‡	IC 901		PD4139A
‡‡	IC 902		NJM2903M
‡‡	Q 901		2SB822
‡‡	Q 902	Chip Transistor	UN5210
‡‡	Q 903 904 905 906 907	Chip Transistor	DTC124TU
‡	D 901 902 903	Chip Diode	MA141WA
‡	D 904	Chip Diode	MA141A
‡	D 906 907	Chip Diode	MA141K
‡	D 905	LED	LN260RCPX
‡	D 908 909	LED	CL55UR/PGORO
‡	D 910 911 912 913 914 915 916 917 918 919	LED	CL61PGCD680
‡	D 920 921 922 925 928 929 931 933	LED	CL61PGCD680
‡	D 923 924 926 927 930 932	LED	LN360GCPX
	L 901	Inductor 15μH	LAU150K
‡‡	S 901 902 903 904 905 906 907 908 909 910	Switch	CSG-255
‡‡	S 911 912 913 914 915 916 917 918 919 920	Switch	CSG-255
‡‡	S 921 922 923 924 925	Switch	CSG-255
‡‡	IL 901 902	Lamp 8V 60mA	CEL1037
		Xtal	CSS1023
		LCD	CWW1162

RESISTORS

Mark	Circuit Symbol & No.	Part Name	Part No.
	R 901		RS1/10S223J
	R 902 907 918 919 920 92 922 925		RS1/10S222J
	R 903		RS1/10S473J
	R 904		RS1/10S221J
	R 905		RS1/10S361J
	R 906		RS1/10S123J
	R 908 924 926		RS1/8S222J
	R 909		RS1/10S222J
	R 910 911 912 913 914 942		RS1/10S204J
	R 915 916 917		RS1/10S104J
	R 927 928 929 930		RS1/10S181J
	R 931 932		RS1/8S331J
	R 933 934		RS1/8S241J
	R 935 936 938 939		RS1/10S331J
	R 937 940		RS1/10S471J
	R 941		RS1/10S391J
	R 943 944		RS1/10S121J

CAPACITORS

Mark	Circuit Symbol & No.	Part Name	Part No.
	C 901		CKSQYF104Z25
	C 902 905 908		CKSYF334Z25
	C 903(SDK/WG, EW, EI)		CCSQCH080D50
	C 904		CCSQCH040C50
	C 906 907		CKSQYB103K50

Unit Number :
Unit Name : Amp Unit

Mark	Circuit Symbol & No.	Part Name	Part No.
‡‡	IC 551		TA8215L
‡‡	Q 551		2SD1859
‡	D 551	Chip Diode	MA3091
	L 551	Choke Coil	CTH1023
	R 551 552		RS1/10S682J
	R 553 554		RS1/10S123J
	R 555 556		RD1/4PS181JL
	R 557 558 559 560		RD1/4PS4R7JL
	R 561		RS1/10S821J
	R 562 563 566		RS1/8S0R0J
	R 564 565		RS1/10S0R0J
	C 551 552		CEA4R7M35LL
	C 553 554		CCSQSL271J50
	C 555 556 571		CEA470M10LL
	C 557 558 559 560		CQEA224J63
	C 569	1000μF/16V	CCH-124
	C 570	220μF/10V	CCH1014
	C 572		CKSYF473Z50

Unit Number :
Unit Name : Power Supply Unit

MISCELNEOUS

Mark	Circuit Symbol & No.	Part Name	Part No.
‡‡	IC 951		M5F7809M-01
‡‡	IC 952		AN6540
‡‡	IC 953		AN7805R
‡‡	Q 951 953		2SB1243
‡‡	Q 952 954 955		2SB1238
‡‡	Q 956 960	Chip Transistor	2SC2712
‡‡	Q 957	Chip Transistor	UN2210
‡‡	Q 958 959	Chip Transistor	UN2212
‡	D 951		ERC05-10B
‡	D 952 953 954 955 956 957		ERA15-02VH
	L 951	Choke Coil	CTH1015
	L 952	Choke Coil	CTH1005

RESISTORS

Mark	Circuit Symbol & No.	Part Name	Part No.
	R 952 955 957 959 961 968		RS1/10S223J
	R 953(SDK/WG, EW, EI)		RS1/10S152J
	R 954(UC)		RS1/10S152J
	R 956 958 960		RS1/10S222J
	R 963		RS1/10S333J
	R 962		RS1/10S152J
	R 965		RS1/10S104J
	R 966 967		RS1/10S153J
	R 969		RS1/10S103J

CAPACITORS

Mark	Circuit Symbol & No.	Part Name	Part No.
	C 951 952 958		CEA010M50LS2
	C 953	1000μF/16V	CCH1003
	C 954 957	2200μF/16V	CCH1001
	C 955	470μF/16V	CCH-114
	C 956		CEA101M10L2
	C 959		CEA101M10LL
	C 960		CEA470M10LS
	C 961 962 963 964		CKSQYB153K50
	C 965 966		CCG-105
	C 967		CEA102M16L2

Unit Number :
Unit Name : Mechanism P.C.Board

Mark	Circuit Symbol & No.	Part Name	Part No.
‡‡	Q 831	Photo Transitor(DISC SENSE)	PH102-F
‡	D 831	LED(DISC SENSE)	SLH-34VC3F
‡‡	M 833	Motor Unit(LOADING)	CXA2129
‡‡	S 832	Switch(DISC SET)	CSN1004

Unit Number :
Unit Name : Carriage P.C.Board

Mark	Circuit Symbol & No.	Part Name	Part No.
‡‡	M 831	Motor Unit(SPINDLE)	CXM1033
‡‡	M 832	Motor Unit(CARRIAGE)	CXA2133
‡‡	S 831	Switch(HOME)	CSN-094

Miscellaneous Parts List

Mark	Circuit Symbol & No.	Part Name	Part No.
		PU Unit	CGY1007

22. PACKING METHOD

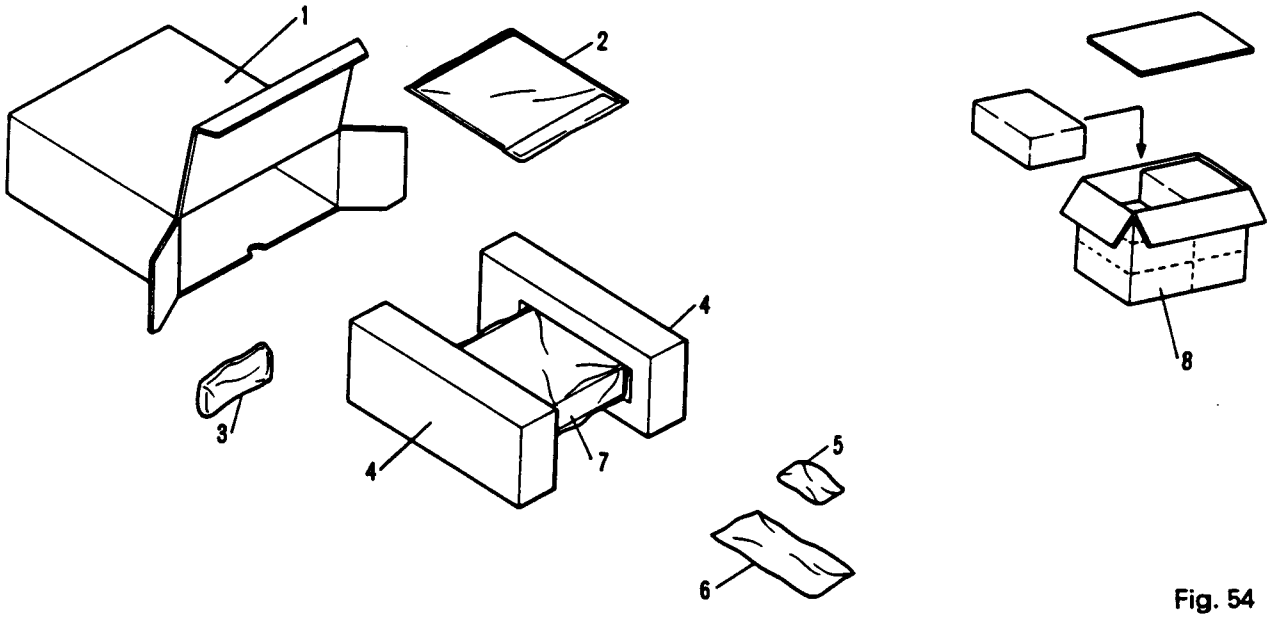

Fig. 54

- **Parts List**

Mark	No.	Part No.	Description
	1	CHG1447	Carton (UC)
		CHG1449	Carton (WG)
		CHG1448	Carton (EW, ES)
	2-1		Card
	2-2	CRW1020	Label (UC)
		CRW1047	Label (WG, EW, EI)
	2-3		Caution Card
	2-4	CRD1168	Owner's Manual (UC)
		CRD1171	Owner's Manual (WG)
		CRD1169	Owner's Manual (EW) (English, French, German, Spanish)
		CRD1170	Owner's Manual (EW) (Swedish, Norwegian, Dutch)
		CRD1195	Owner's Manual (EI)
	2-5		Card (UC)
			Card (WG, EW, EI)
	2-6		Caution Card (WG)
	2-7		Caution Card
	2-8		Card (UC) (×2)
	2-9		Caution Card (WG)
	2-10		Passport

Mark	No.	Part No.	Description
	3	CDE1894	Cord (UC)
		CDE1895	Cord (WG, EW, EI)
	4	CHP1119	Styrofoam
	5	CEA1381	Accessory Assy
	5-1	CBH-865	Spring (×2)
	5-2		Holder (×2)
	5-3	CNF-111	Strap
	5-4	CNV1917	Bush
	5-5		Screw Assy
	5-5-1	BMZ30P050FMC	Screw (×2)
	5-5-2	BMZ40P080FMC	Screw (×4)
	5-5-3	BMZ50P080FMC	Screw (×4)
	5-5-4	CBA-102	Screw (×1)
	5-5-5	CBA1002	Screw (×1)
	5-5-6	HMF40P080FUC	Screw (×1)
	5-5-7	NF50FMC	Nut (×2)
	6	CNS1403	Panel
	7	CEG-114	Cover
	8	CHL1447	Contain Box (UC)

http://www.manualscenter.com

PIONEER®
The future of sound and vision.

Service Manual

SERVICE GUIDE
ORDER NO.
CRT 1161

CD MECHANISM UNIT

CX-173

- This service manual is a description of the CD mechanism found in the model numbers listed in the table below.
- When performing repairs use this manual together with the specific manual for the model under repair.

Model	Service Manual
DEH-66/UC	CRT1166
DEH-66SDK/WG	
DEH-66/EW	
DEH-66/EI	

PIONEER ELECTRONIC CORPORATION 4-1, Meguro 1-Chome, Meguro-ku, Tokyo 153, Japan
PIONEER ELECTRONICS SERVICE INC. P.O. Box 1760, Long Beach, California 90801 U.S.A.
PIONEER ELECTRONICS OF CANADA, INC. 505 Cochrane Drive, Markham, Ontario L3R 8E3 Canada
PIONEER ELECTRONIC [EUROPE] N.V. Keetberglaan 1, 2740 Beveren, Belgium
PIONEER ELECTRONICS AUSTRALIA PTY. LTD. 178-184 Boundary Road, Braeside, Victoria 3195, Australia TEL: [03] 580-9911

FK © JUNE 1988 Printed in Japan

http://www.manualscenter.com

1. DISASSEMBLY

• Disassembly of the Carriage Unit

Note: There may be times when the names of parts used in this manual are not the same as those used in the lists accompanying the Exploded View. If a different name is used here, the part name given in the Exploded View is also provided in parentheses ( ).

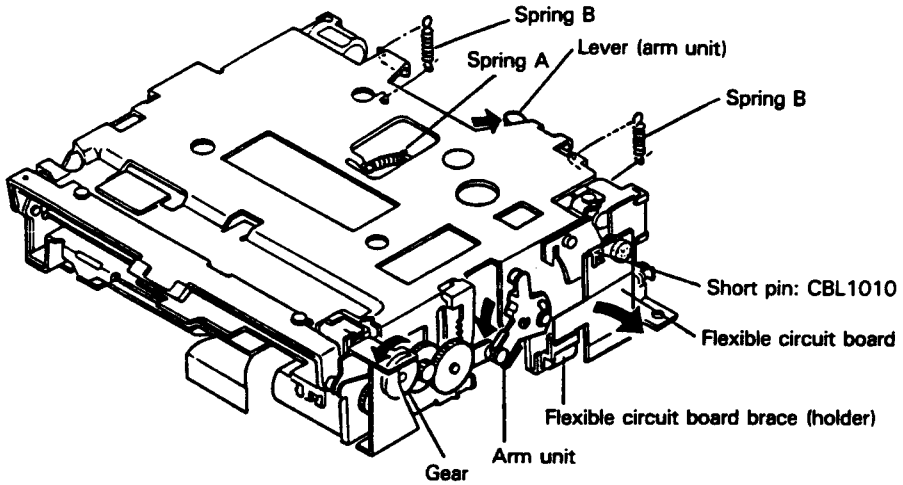

Fig. 1

1. Put the mechanism unit into a loading complete state. (Move the lever back and rotate the gear while pressing down lightly on the arm unit. Rotate the gear until the three carriage unit shafts are free and the unit is supported by the four damper units.
2. Remove Spring A and two Springs B.
3. Remove the flexible circuit board from the flexible circuit board brace.

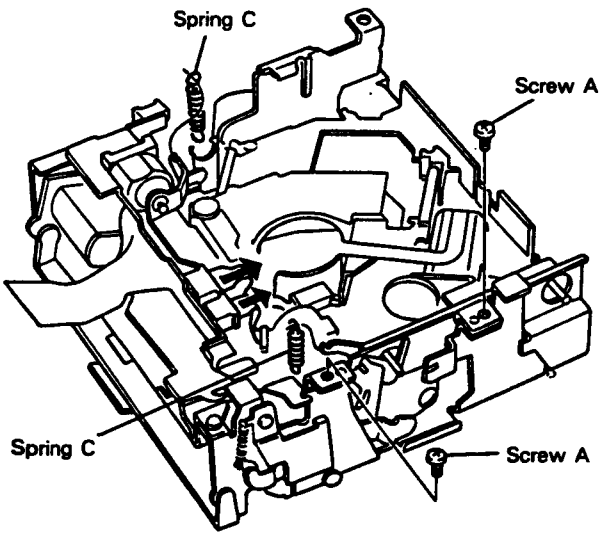

Fig. 2

4. Turn the mechanism unit upside down.
5. Remove the two Springs C.
6. Remove the two flexible circuit boards from their connectors.
7. Remove the two Screws A.

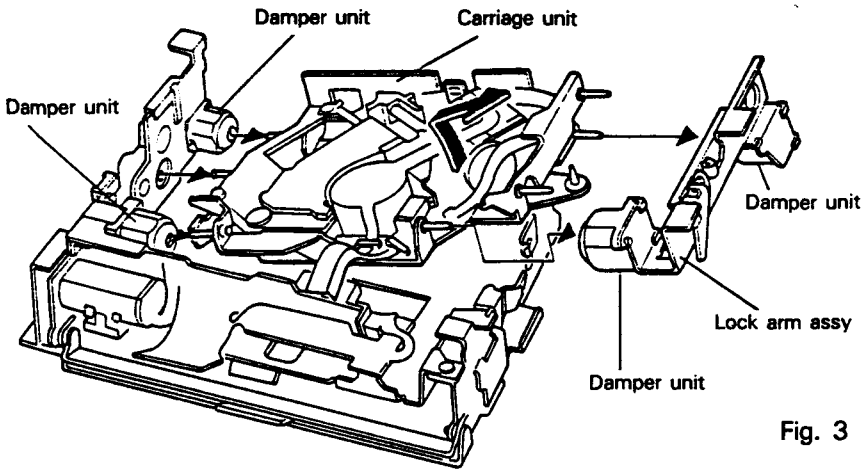

Fig. 3

8. Lift the lock arm assembly and then pull out the carriage unit.
9. Remove the carriage unit from the lock arm assembly.
   Note: The damper units are lined with a thin rubber film. Be careful not to damage this when disassembling.

• Disassembly of the Carriage Motor Unit

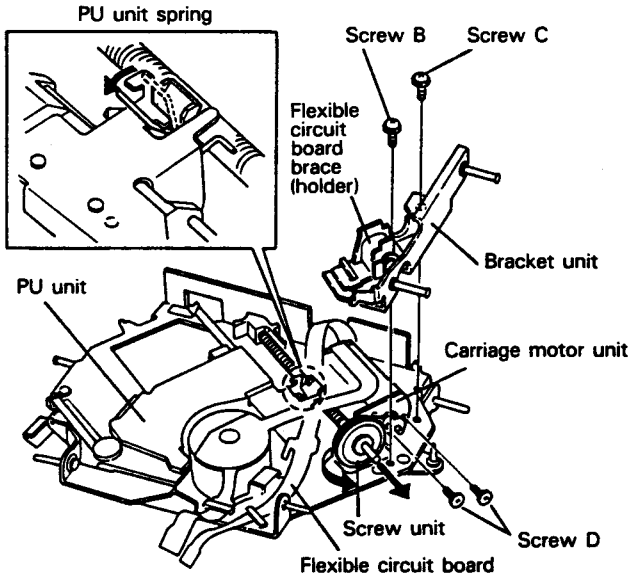

Fig. 4

1. After removing the Screw B and Screw C, remove the bracket unit. At this time remove the flexible circuit board from the flexible circuit board brace.
2. Remove the belt.
3. Cock the PU unit spring as shown in Fig. 4 and then move the PU unit to its outermost position.
   (Cocking the spring disengages the screw unit so that the PU unit can be moved by hand from above.)
4. Pull the screw unit out of the assembly.
5. Remove the two Screws D and then the carriage motor unit.
   Note: When reinstalling the carriage motor unit, tighten Screw D and seal it.

http://www.manualscenter.com

• Disassembly of the PU Unit

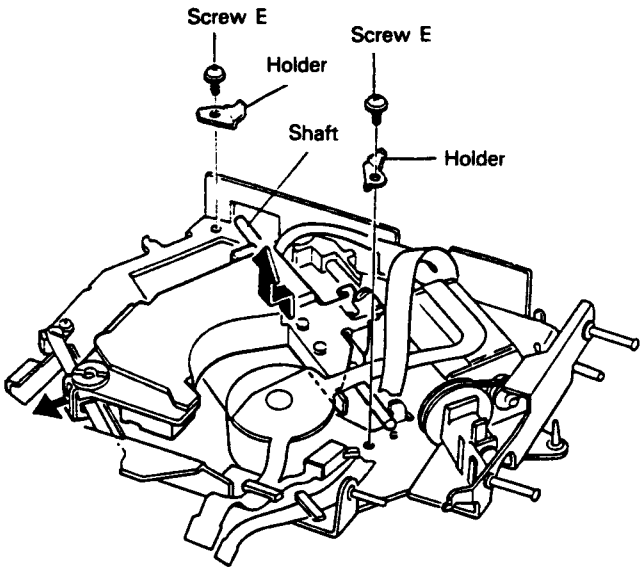

Fig. 5

1. Cock the PU unit spring as shown in Fig. 4. Move the PU unit to the center of the shaft for easy removal.
2. Remove the two Screws E and then the holders.
3. Remove the PU unit, lifting it from the shaft side where the holders have been removed and being careful not to catch the shaft on the opposite side.
4. Pull the shaft out of the PU unit.

• Disassembly of the Spindle Motor Unit

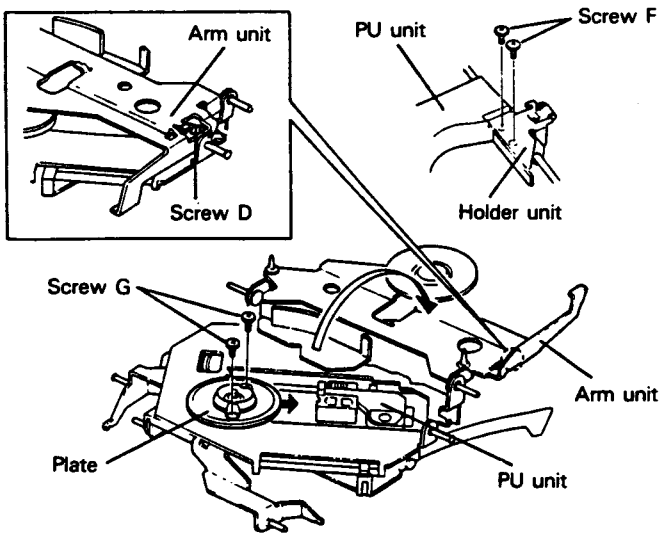

Fig. 6

1. Remove the two Screws F and then remove the holder unit from the PU unit.
2. Cock the PU unit spring as shown in Fig. 4 and move the PU unit to its outermost position.
3. Turn the whole carriage unit right side up.
4. Remove Screw D and turn the arm unit upside down.
5. Turn the spindle motor plate so that the holes on the plate are at the position of the screws underneath.
6. Remove the two Screws G.
   Note: When reinstalling the spindle motor unit, tighten the Screws G and seal them.
7. Slide the spindle motor unit onto its side and remove it.

• Disassembly of the Loading Motor Unit

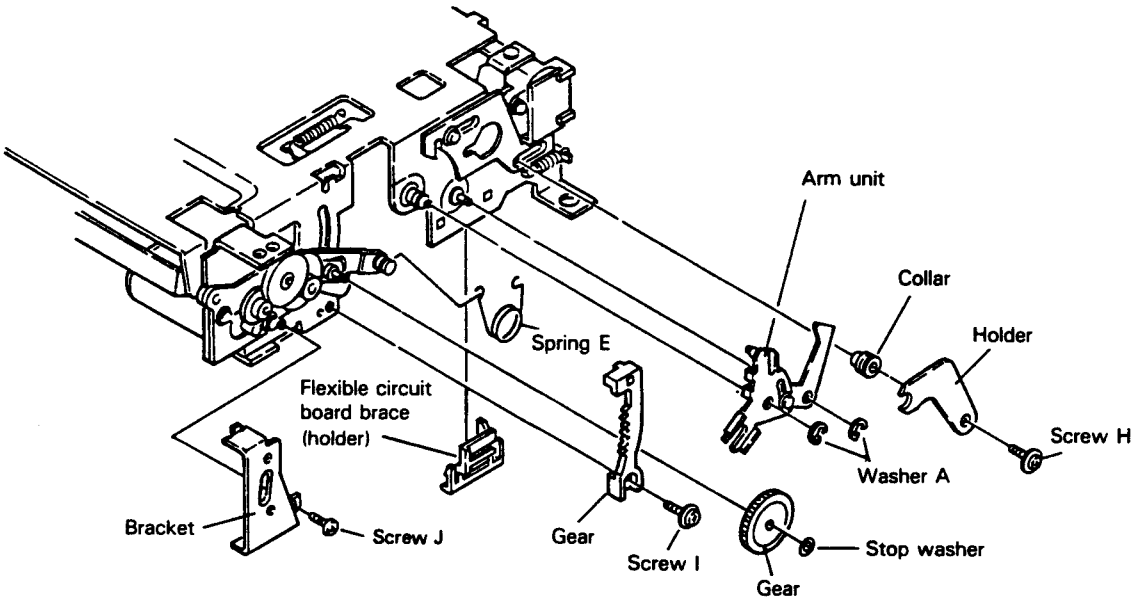

Fig. 7

1. Remove the carriage unit.
   (Refer to the previous section entitled, "Disassembly of the Carriage Unit.")
2. Remove the flexible circuit board brace.
3. Remove Screw H and then the holder.
   Note: When Screw H is removed, the collar will also come free. Be sure not to lose it.
4. Remove the Screw E.
5. Remove the two Washers A and then the arm unit.
6. Remove the stop washer and then the gear.
7. Remove Screw I and then the gear.
8. Remove Screw J and then the bracket.

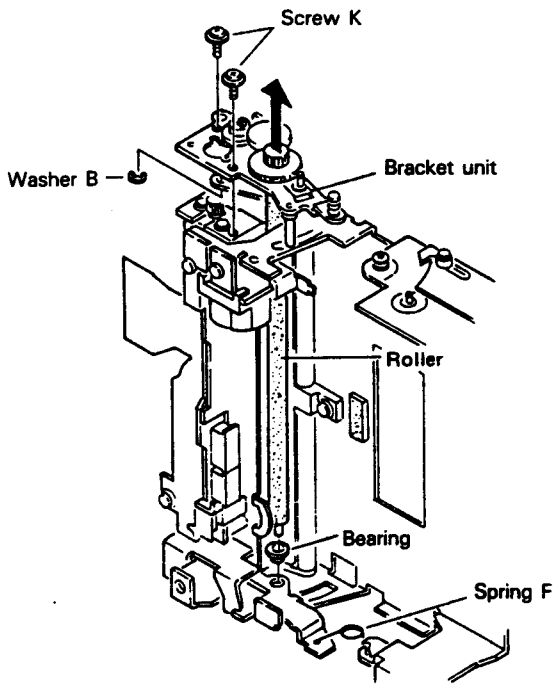

Fig. 8

9. Remove Spring F.
10. Remove washer B.
11. Remove the two Screws K and then pull out the bracket unit.
    Note: The bearing at the tip of the roller will also come loose. Be careful not to lose it.

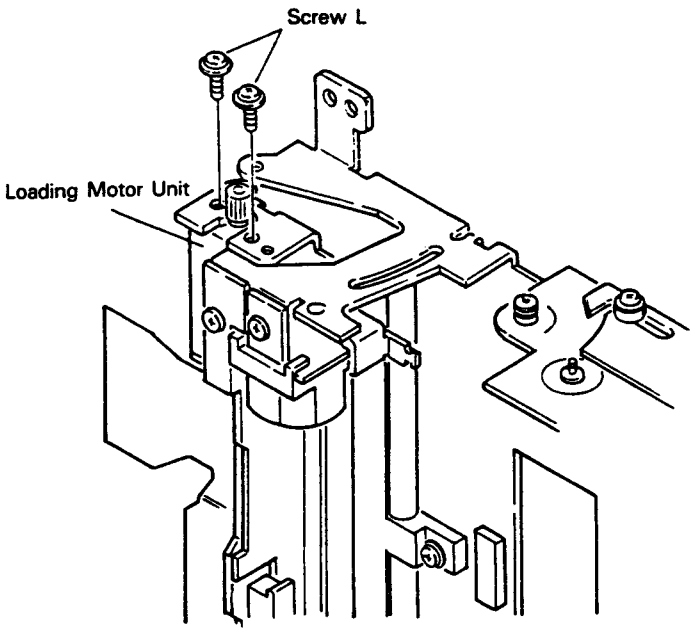

12. Remove the two Screws L and then the loading motor unit.

Fig. 9

2. MECHANISM DESCRIPTION

- **Loading Operation**

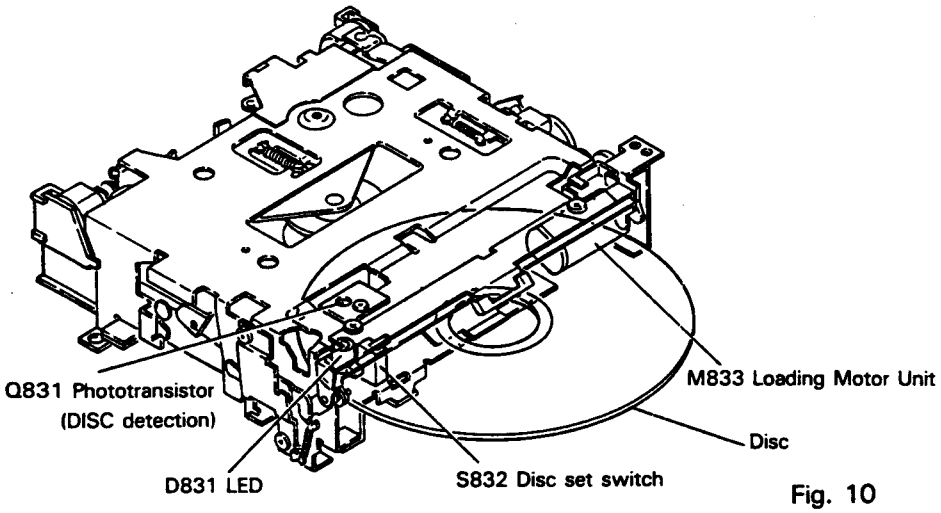

Fig. 10

1. When a disc is inserted into the unit, it enters between the LED and the phototransistor with the result that the light from the LED to the phototransistor is blocked.
2. When the phototransistor detects a disc presence in the unit, the loading motor begins to rotate and loading begins.
3. When the loading motor rotates, the roller is turned and the disc is moved into the unit. (Fig. 11)

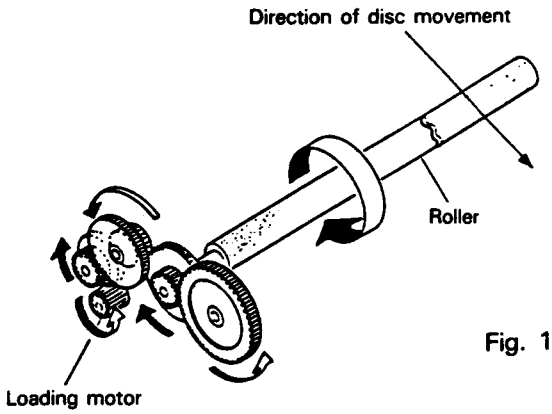

Fig. 11

http://www.manualscenter.com

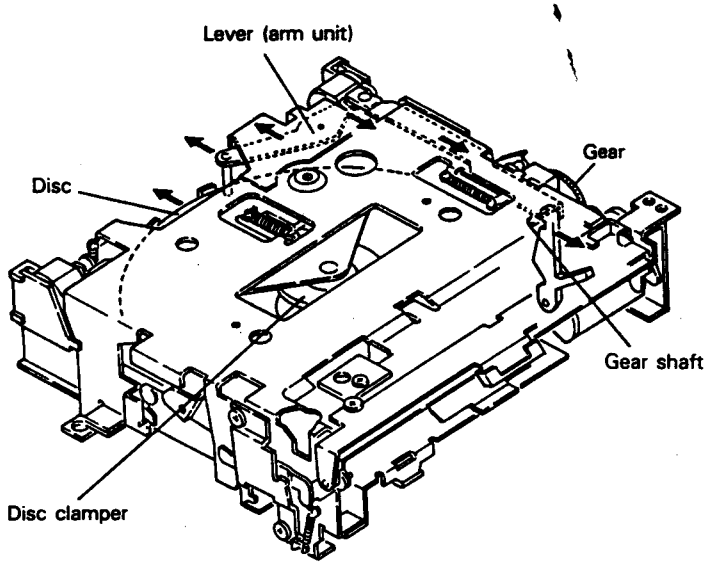

Fig. 12

4. When the disc pushes on the lever, the gear shaft lock is released. The gear meshes with another internal toothed gear and is lowered. (See Figs. 12, 13)
5. The action of the gear shaft moving down lowers the disc clamp and the disc is held in place.
6. As the gear is lowered when it meshes with the internal toothed gear, the gear unit also is lowered and the disc set switch pressed.
7. At the same time, the disc door is lowered and the disc insert door is blocked to prevent the introduction of another disc.
   The three shafts of the carriage unit are in a free mode and the carriage unit is in an anti-vibration mode supported by the four damper units. (Fig. 14)
   When the disc set switch is turned on, loading motor rotation stops and the loading operation is complete.

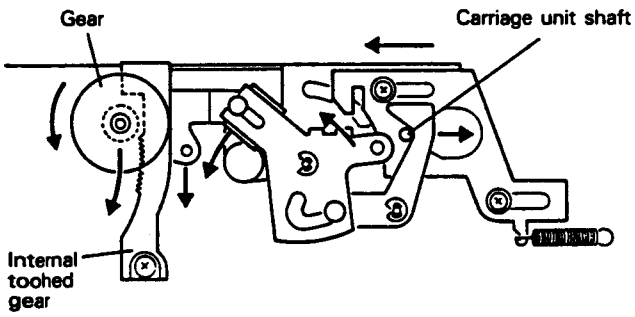

Fig. 13

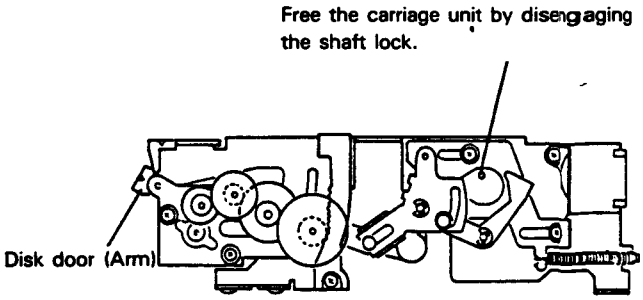

Fig. 14

(view of reverse side)

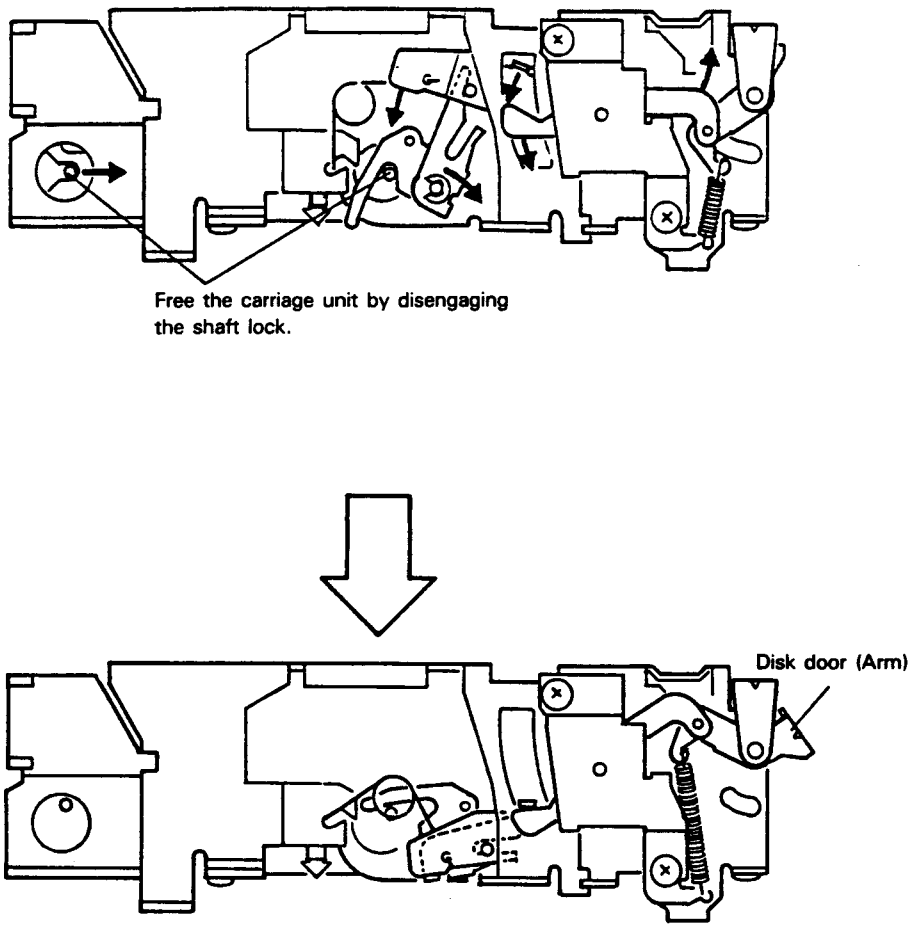

Fig. 15

http://www.manualscenter.com

PIONEER®
The future of sound and vision.

Service Manual

ORDER NO.
CRT 1177

COMPACT DISC PLAYER

CDX-3 UC, EW

COMPACT disc DIGITAL AUDIO

Note:
- **See the separate manual CX-173 (CRT1161) for the CD mechanism description.**
- **Refer to the service manual CDX-M100 (CRT1136) for finding circuit description which are not shown in this manual.**

- **The following power supply parts differ according to the unit's serial number.**

	Serial No.	Serial No.
	00001 ~ 00500	00501 ~
IC951	KHA1001B D/D Converter	L780S05-LR Regulator
C957	–	CKSYF334Z25
C958	–	CKSYF104Z25

CONTENTS

1. CONNECTION 1
2. SAFETY INFORMATION 2
3. PLAYING COMPACT DISCS 3
4. CIRCUIT DESCRIPTION 4
5. DISASSEMBLY 11
6. BLOCK DIAGRAM 12
7. ADJUSTMENT 14
8. SCHEMATIC CIRCUIT DIAGRAM 52
9. CONNECTION DIAGRAM 56
10. CHASSIS EXPLODED VIEW 63
11. CD MECHANISM UNIT EXPLODED VIEW 66
12. ELECTRICAL PARTS LIST 70
13. PACKING METHOD 73

PIONEER ELECTRONIC CORPORATION 4-1, Meguro 1-Chome, Meguro-ku, Tokyo 153, Japan
PIONEER ELECTRONICS SERVICE INC. P.O. Box 1760, Long Beach, California 90801 U.S.A.
PIONEER ELECTRONICS OF CANADA, INC. 505 Cochrane Drive, Markham, Ontario L3R 8E3 Canada
PIONEER ELECTRONIC [EUROPE] N.V. Keetberglaan 1, 2740 Beveren, Belgium
PIONEER ELECTRONICS AUSTRALIA PTY. LTD. 178-184 Boundary Road, Braeside, Victoria 3195, Australia TEL: [03] 580-9911

© PIONEER ELECTRONIC CORPORATION 1988

FS OCT. 1988 Printed in Japan

http://www.manualscenter.com

• CD Player Service Precautions

1. Since these screws protects the mechanism during transport, be sure to affix it when it is transported for repair, etc.
2. For pickup unit (CGY1007) handling, please refer to "Disassembly"(Fig. 13) During replacement, handling precautions shall be taken to prevent an electrostatic discharge (protection by a short pin).
3. During disassembly, be sure to turn the power off since an internal IC might be destroyed when a connector is plugged or unplugged.

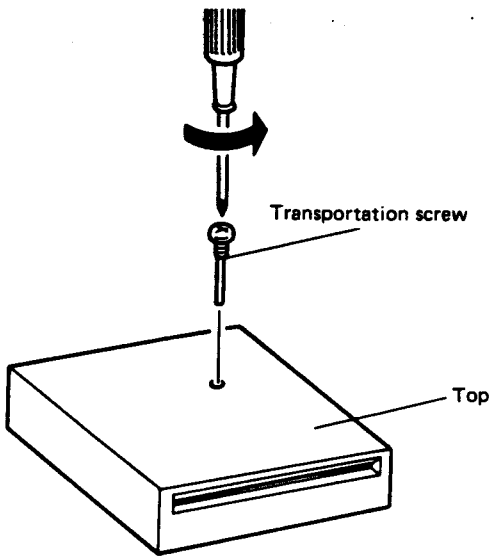

SPECIFICATIONS

General

System ..... Compact disc audio system
Usable discs ..... Compact discs
Signal format ..... Sampling frequency: 44.1 kHz
Number of quantization bits: 16; linear
Power source..... 14.4 V DC (10.8–15.6 V allowable)
Grounding system ..... Negative type
Power consumption ..... 5.5 W
Maximum power consumption ..... 9 W
Dimensions (chassis) .....180(W) × 50(H) × 150(D) mm
(nose).....170(W) × 46(H) × 7(D) mm
Weight ..... 1.3 kg(2.9 lbs.)

Audio

Frequency characteristics ..... 5–20,000 Hz (±1 dB)
Signal-to-noise ratio ..... 85 dB (1 kHz) (IEC-A network)
Dynamic range ..... 87 dB (1 kHz)
Wow and flutter ..... Below measurement range
Distortion factor ..... 0.008% (1 kHz, 0 dB)
Output voltage ..... 250 mV (1 kHz, 0 dB)
Number of channels ..... 2 (stereo)

Note:
Specifications and the design are subject to possible modification without notice due to improvements.

1. CONNECTION

- Before making final connections, make temporary connections then operate the unit to check for any connecting cord problems.
- Refer to the instruction manual for details on connecting the various cords of the deck and power amp then make connections correctly.

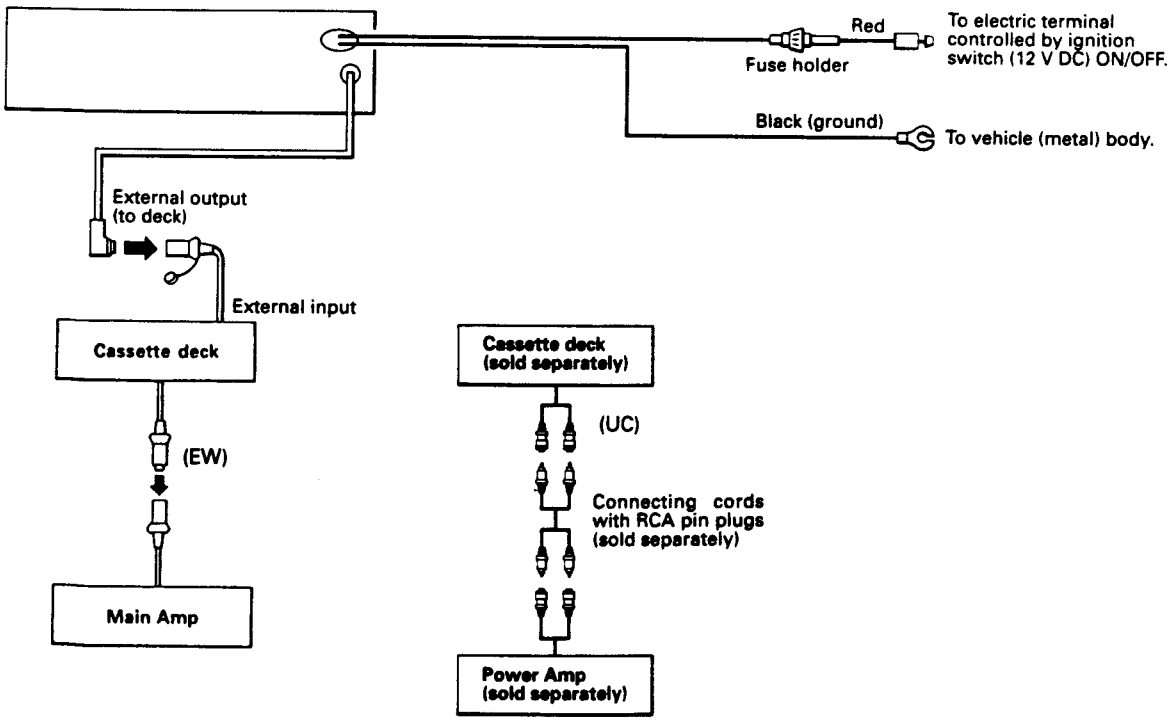

2. SAFETY INFORMATION (CDX-3/EW)

1. Safety Precautions for those who Service this Unit.

- Follow the adjustment steps (see pages 14 through 35) in the service manual when servicing this unit. When checking or adjusting the emitting power of the laser diode exercise caution in order to get safe, reliable results.

Caution:

1. **During repair or tests, minimum distance of 13cm from the focus lens must be kept.**
2. **During repair or tests, do not view laser beam for 10 seconds or longer.**

2. A "CLASS 1 LASER PRODUCT" label is affixed to the bottom of the player.

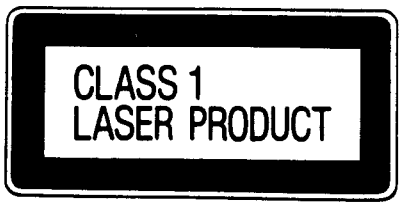

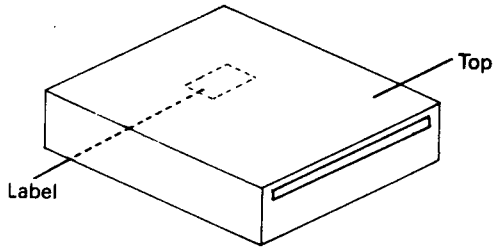

3. The triangular label is attached to the mechanism unit plate unit.

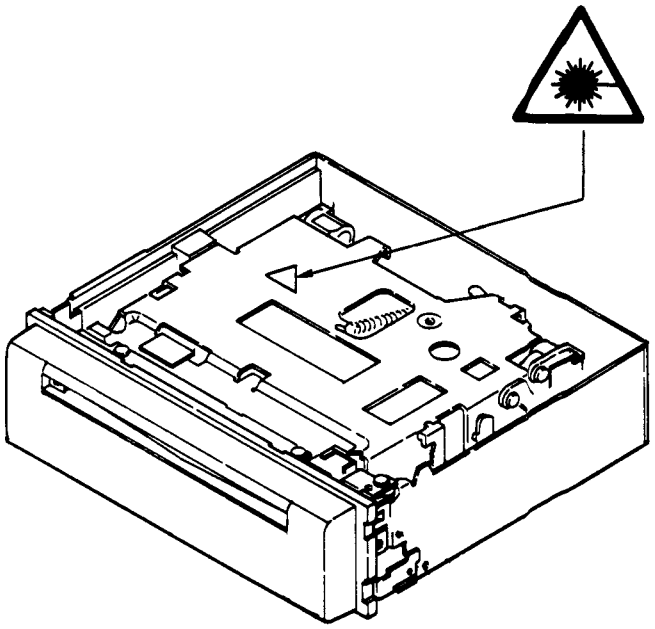

4. Specifications of Laser Diode

Specifications of laser radiation fields to which human access is possible during service.

Wavelength	=	780 nanometers
Radiant power	=	69.7 microwatts (Through a circular aperture stop having a diameter of 80 millimeters)
		0.55 microwatts (Through a circular aperture stop having a diameter of 7 millimeters)

3. PLAYING COMPACT DISCS

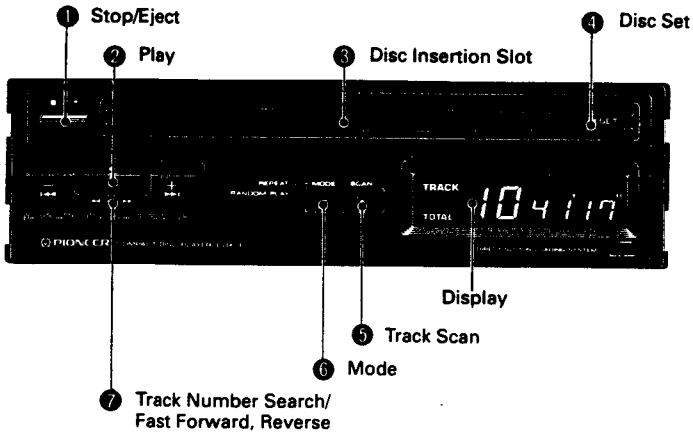

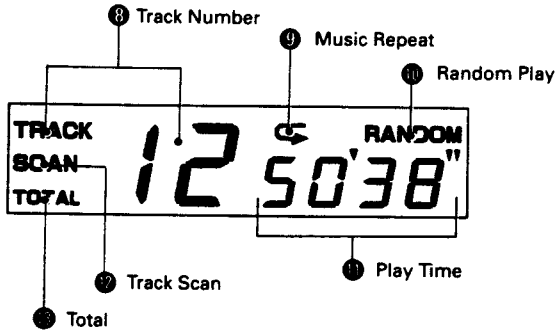

- When a space of a few seconds exists between the selections of the disc being used, ● will show –'02, –'01 when the spaces are passed.

Using Track Scan

This function lets you scan through the tracks on a disc by playing only the first ten seconds of each track.

1. Press button 5 ("SCAN" ● will appear on the display).
2. To cancel track scan and continue playing the current track, press button 5 again.

- After track scan has played through all of the tracks, disc play resumes from the beginning of the track from which track scan was started.

Using Music Repeat and Random Play

Each time 10 is pressed, the mode is changed in the following order: Repeat ("⇄" 9 appears)→Random Play ("RANDOM"● appears)→ Release.

Music Repeat

To repeat the music you are listening to, select the repeat mode ("⇄" 9 appears).

- When music repeat is not operational, the whole disc will be played repeatedly.

Random Play

To play music randomly, select the random play mode ("RANDOM" ● appears). Once the current track has been played, the microprocessor will randomly select the next and subsequent tracks.

- Since selections are played in random order, the same selection may be played twice in succession.

- Turn the cassette deck power switch or the tuner power switch to the OFF position.

1 When a disc is inserted half-way into the disc insertion slot 3 with its label side upward, the disc is automatically loaded and played.

During the first five seconds after loading the disc, the "TOTAL" indicator ● appears in the display, and the total number of tracks 8 and their total playing time ● are indicated.

2 Use track number search to select a track.

Press the (+) side of button 7 to increase the number at position 8, or the (–) side to decrease the number. Holding either side of button 7 down changes the track number at high speed.

3 Set the volume, balance, bass and treble to the desired level using the cassette deck controls.

4 To stop CD play, press button 1.

(To restart CD play, press button 2. CD play restarts from the point where it was stopped.) To eject the disc, press button 1 again. If the ejected disc is pushed back in, it is loaded and played again.

Note:

- It takes a short time after a disc is loaded before it is played. This is because the CD player requires a setup time to read digital signals from the disc.
- When ◄ SET 3 is displayed, a disc is loaded. If another disc is inserted into the slot at this time, the discs may be damaged or the player may malfunction.
- Do not insert two discs into the slot at the same time. This may cause a malfunction.
- The cassette tape deck and tuner can be used while a disc is in the set position.
- If the engine is started during CD play, or if the ignition key is turned OFF and is then turned to ACC or ON, CD play stops. Press button 2 to restart CD. Playing will resume close to where it left off.

Using Fast Forward and Reverse

To fast forward, hold down button 2 and press the (+) side of button 7. To reverse, hold down button 2 and press the (–) side of button 7.

- Sound is output during fast forward and reverse operations.

4. CIRCUIT DESCRIPTION

(1) DIB, AUXB Signals

These signals are used to control the operations of the CD player. The DIB signal is output from the main unit (tuner, cassette deck, etc.), and goes high while the main unit is operating. When this signal is received, IC751 pin ㉝ goes low; the CDX-3 stops operation then enters the standby mode.

When the main unit stops operation, the DIB signal goes low to enable the operation of the CDX-3. At this time, if the CDX-3 is stopped during playing, play starts automatically from the tune which was being played when the CDX-3 was stopped.

The same operation is also performed when the ACC function is deactivated.

When the DIB signal goes high while the CDX-3 is operating, the CDX-3 stops operation and enters the stop mode.

The AUXB signal is output at high level while the CDX-3 is operating, signaling to the main unit that the CDX-3 is operating.

(Note: Low = 0 V, High = 14.4 V)

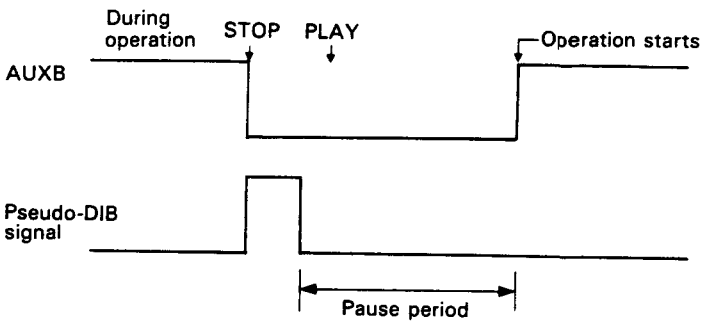

Fig. 1

(2) Focus Servo Circuit

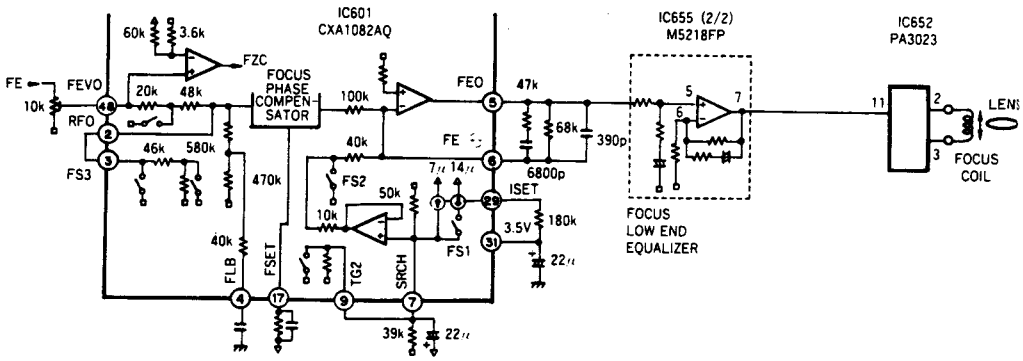

FEVO and FEO are in phase.

Fig. 2 Focus Servo Section Block Diagram

A block diagram of the focus servo circuit is shown above. The capacitor connected to pin ④ provides a time constant to boost the low-frequency response in the continuous play mode. The internal constant current (ISET current) is determined by the resistance connected to pins ㉙ and ㉛ : 7 μA when a 180-kohm resistor is connected.

ISET current = 1.276 V/R

This current is used for the focus search, tracking jump and the carriage kick operations. The reference voltage for the inverted input of the FZC comparator is set to (VCC-VC) × 5.7% (approx. 140 mV).

http://www.manualscenter.com

a) In-focus (search voltage):

An in-focus sequence is used to drive the laser lens within the focus S-curve (approx. 10 μm) to close the servo loop when it is focused. The search voltage is determined by the sensitivity of the focus actuator which is designed so that the lens drive distance is set to ± 1mm. In this system, the following voltages are obtained at pin ⑦.

When FS1 is OFF:

−7 [μA] × 22 [kohms] × 0.63 = −0.097 ≃ −0.1 [VC]: → Lens UP

(22 kohms = 50kohm//37 kohm)

When FS1 is ON:

(14 − 7) [μA] × 22 [kohms] × 0.63 ≃ +0.1 [VC]: → Lens DOWN

As above, FS1 is turned ON and OFF alternately to move the lens up and down. (The time constant for moving up/down is determined by the resistor and capacitor connected to pin ⑦.)

The focus operation is not designed for auto sequence operation. It is executed by following the timing chart (see Fig. 3). This is because the "focus close" command is output only when the lens is moved up to prevent the focus operation from malfunctioning.

* "Lens UP" shows that the lens is moved up close to the disc surface.

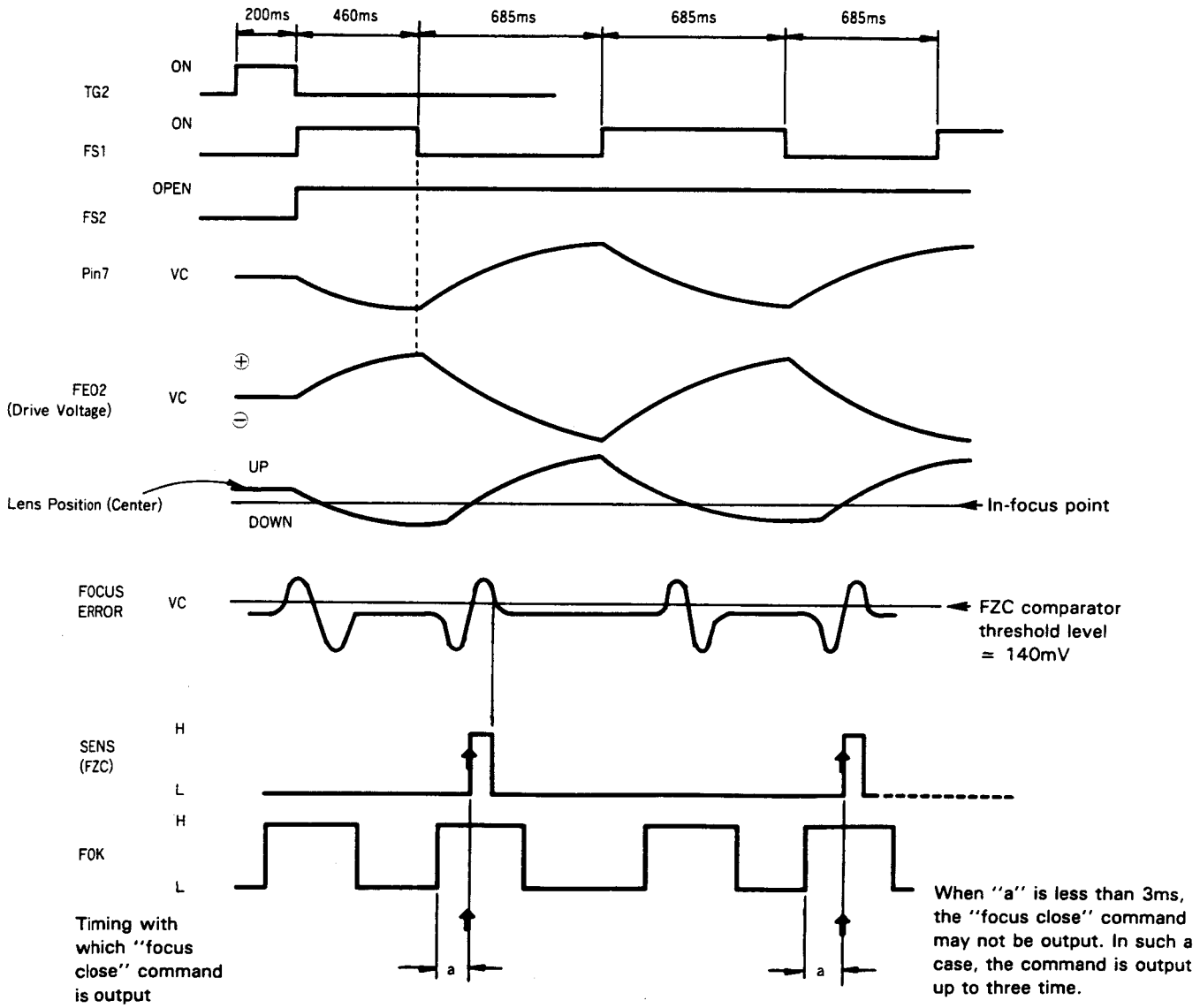

Fig. 3 Focus Close Timing Chart

(4) APC (Automatic Power Control) Circuit

As the laser diode has negative temperature characteristics as well as high-level optical output when driven by a constant current, it is necessary to control the current using a monitoring photodiode to stabilize the output power. For this purpose, an APC (Automatic Power Control) circuit is employed. In this system, an LDI of approx. 50 — 60 mA is used.

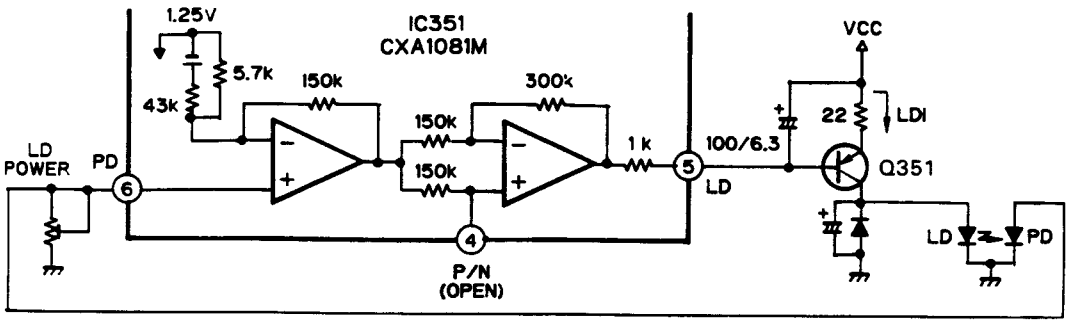

Fig. 5 APC Circuit

(5) Search Sequence

Example: To search the 4th tune when playing the 3rd tune

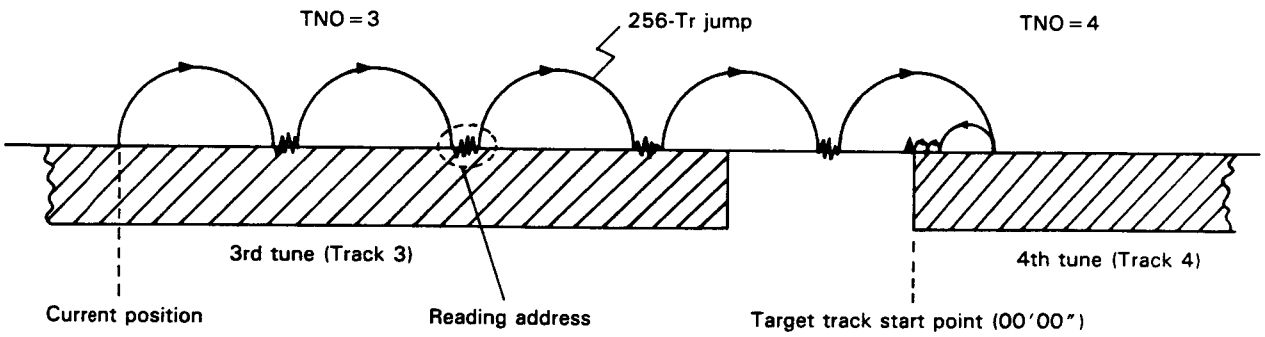

Fig. 6

① After comparing the current track number with the target track number, since the target track number is higher than the current one, the laser pick-up jumps outward by 256 Tr.

② The address of the current position is read to compare the track numbers again.

③ Since the target number is higher, the laser pick-up jumps outward by 256 Tr again.
When operations ② — ③ are repeated, the current track number will become the same as the target track number.

④ Then the number of tracks between the relative address and the beginning of the next tune is calculated and the laser pick-up jumps.

⑤ The relative address at the current position is read to compare it with the target (00'00"). If both addresses are the same, the searching sequence finishes. If not, the calculation and jump operation will be performed again.
When the operations in ④ and ⑤ are repeated, [00'00"] is obtained, the search sequence will be released and the player enters the PLAY mode.

* In actual operation, the laser pick-up returns by 1 Tr to prevent missing the beginning of the tune before starting play.

(3) Tracking, Carriage Servo Circuit

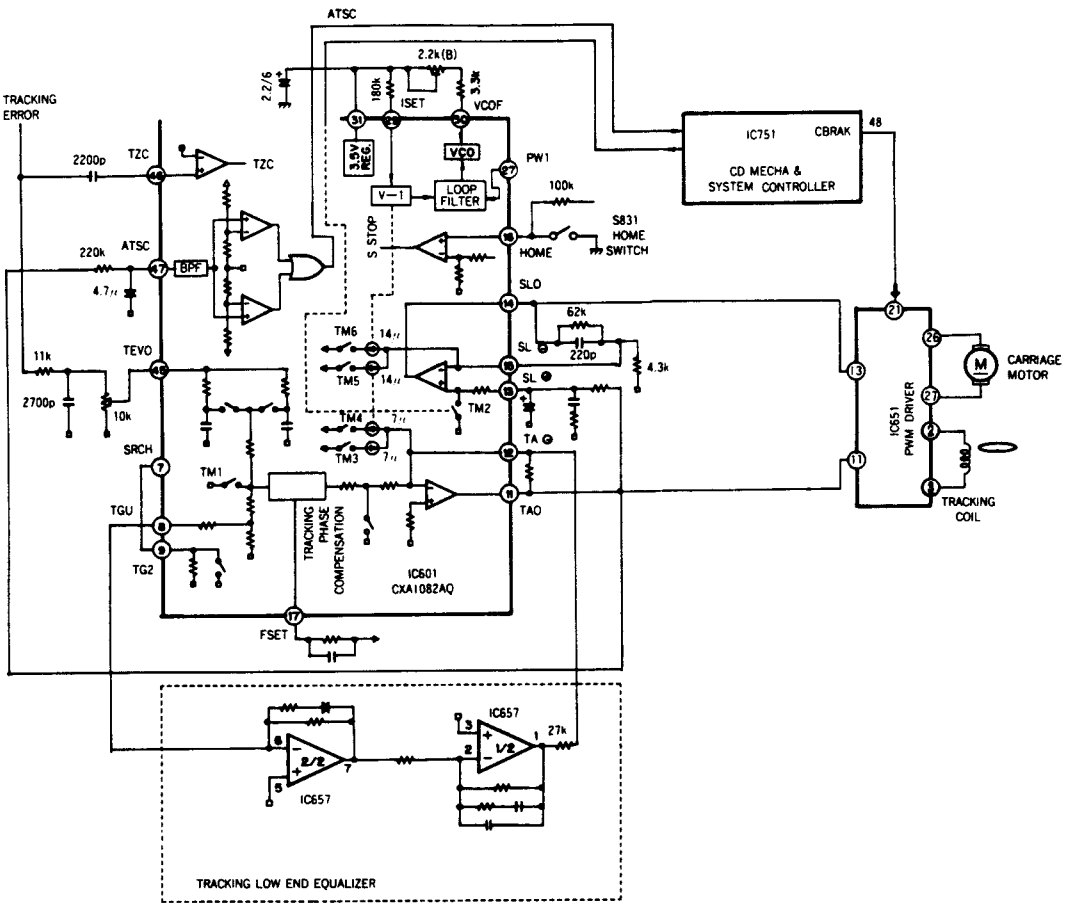

Fig. 4 Tracking, Carriage Servo System Block Diagram

The above figure is a block diagram of the tracking/carriage servo circuit. To perform tracking jump operation (of the laser pick-up) in the FWD (forward) or REV (reverse) direction, TM1 is turned ON and at the same time, TM3 and TM4 are turned ON and OFF. At this time, the voltage generated at pin ⑪ TAO is determined by the current flowing in TM3/TM4 and the feedback resistance from pin ⑫.
That is:

Track jump peak voltage (TAO) = ISET i (tracking) × R_{TAO} = 7 [μA] × 82 (kohms) = 0.57 [VC]

To perform carriage kick operation in the FWD (forward) or REV (reverse) direction, TM2 is turned ON and at the same time, TM5 and TM6 are turned ON and OFF. At this time, the voltage generated at pin ⑭ SLO is determined by the current flowing in TM5/TM6 and the feedback resistance from pin ⑮.
That is:

Carriage kick voltage (SLO) = ISET i (carriage) × R_{SLO} = 14 [μA] × 62 [kohms] = 0.87 [VC]

The polarities of pin ㊺ TEVO and pin ⑪ TAO are reversed.

a) Tracking Equalizer:

This circuit is constructed in 2 stages and consists of a phase compensator (for high frequencies) incorporated in an IC and externally connected low-frequency compensator connected in parallel. The former is the main path and the latter from the side path. These signals are added in pin ⑫ of the TAO amp so that the specified equalization characteristics are obtained.

(6) SETUP Sequence

* If the condition "(LOCK=H) AND (subcode can be read)" is satisfied within 1 second after all servo controls are closed, it is judged that the "setup" has been completed.

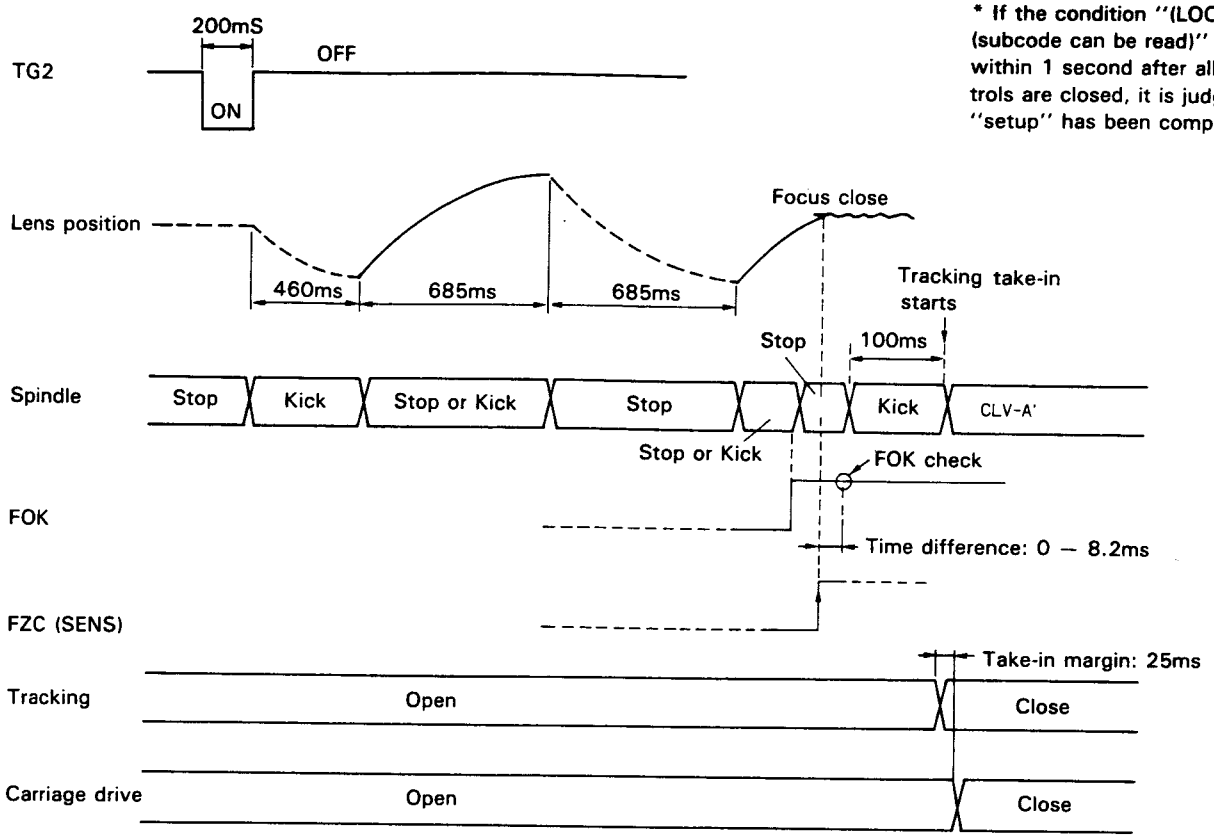

Fig. 7

(7) Spindle Stop Sequence

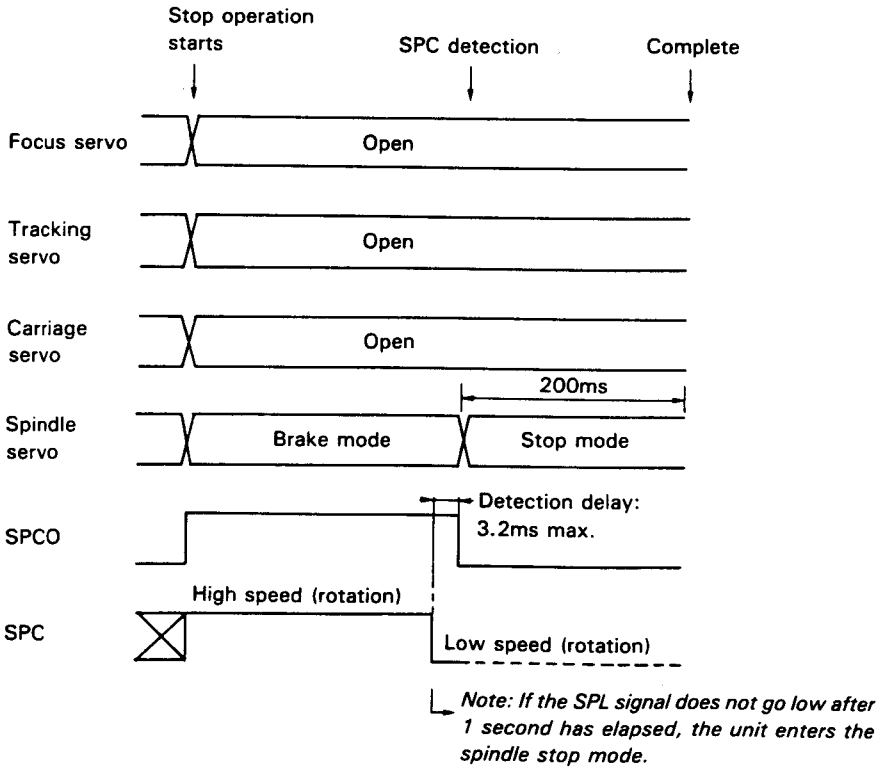

Fig. 8

http://www.manualscenter.com

(8) Flow Chart

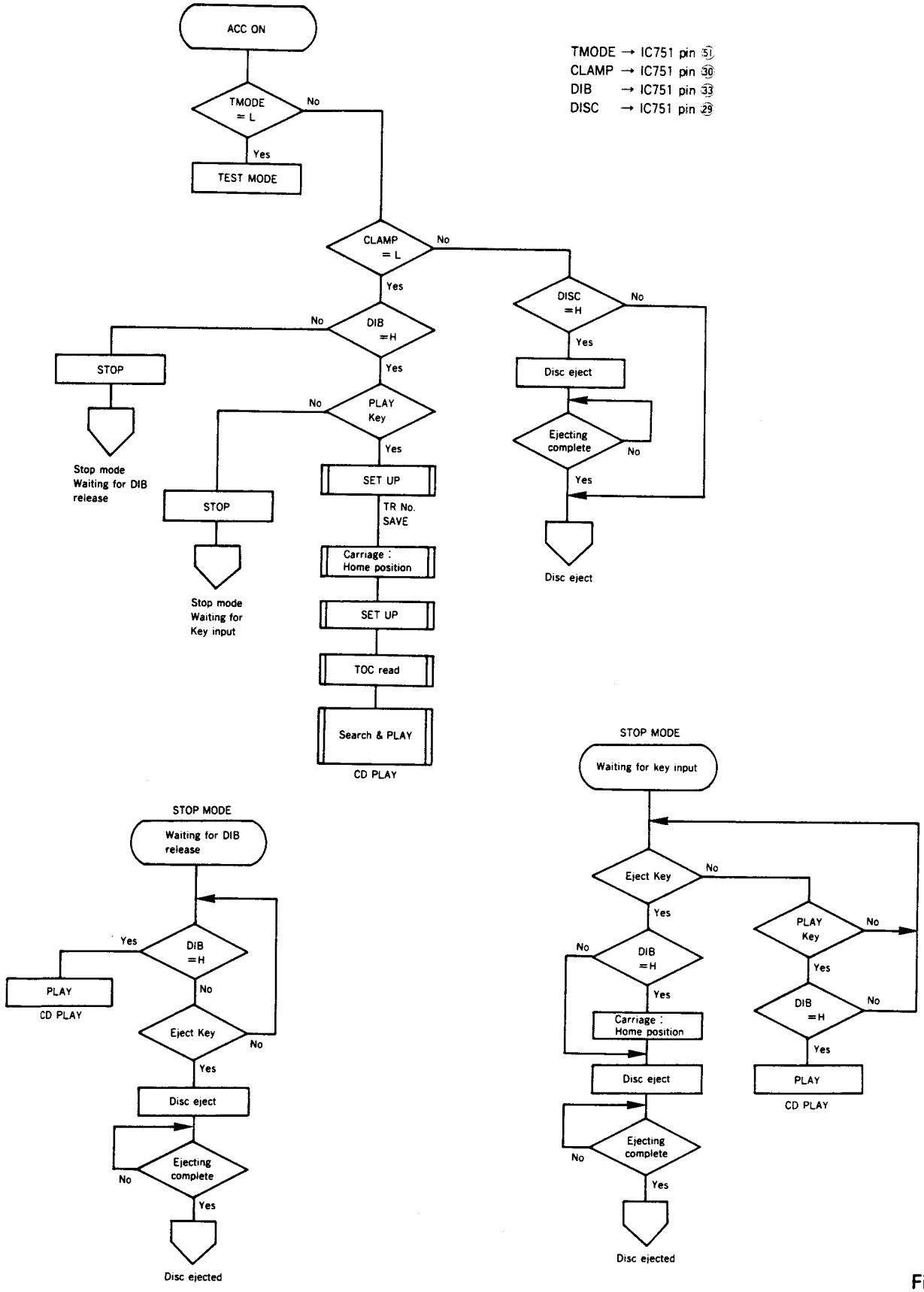

Fig. 9

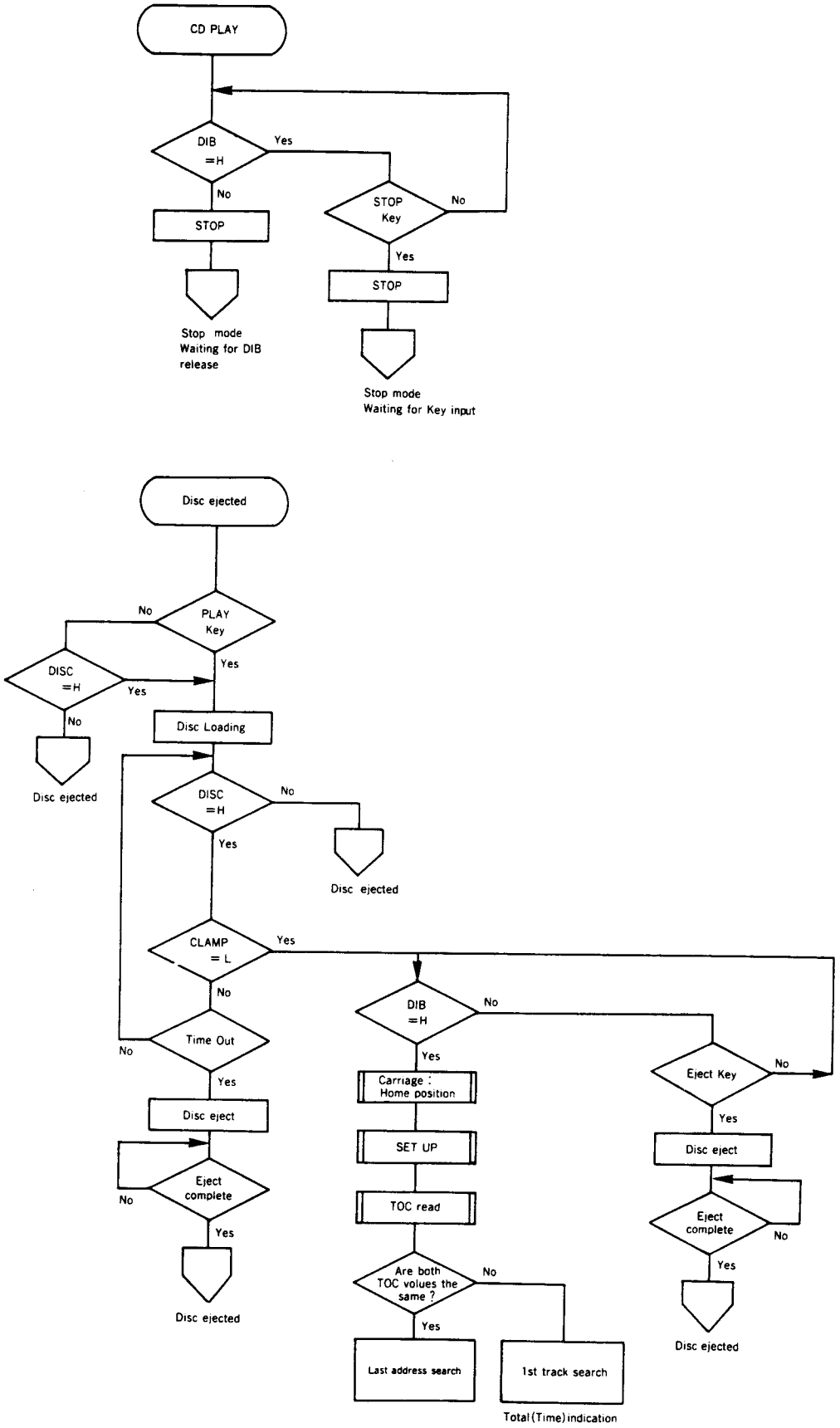
CD PLAY
DIB =H
Yes
No
STOP
STOP Key
No
Yes
STOP
Stop mode Waiting for DIB release
Stop mode Waiting for Key input
Disc ejected
PLAY Key
No
Yes
DISC =H
Yes
No
Disc ejected
Disc Loading
DISC =H
No
Yes
Disc ejected
CLAMP = L
Yes
No
Time Out
No
Yes
Disc eject
Eject complete
No
Yes
Disc ejected
DIB =H
No
Yes
Carriage : Home position
SET UP
TOC read
Are both TOC values the same ?
No
Yes
Last address search
1st track search
Total (Time) indication
Eject Key
No
Yes
Disc eject
Eject complete
No
Yes
Disc ejected

Fig. 10

5. DISASSEMBLY

- **Removing the Case**

1. Insert and turn a flat screwdriver to remove the case.

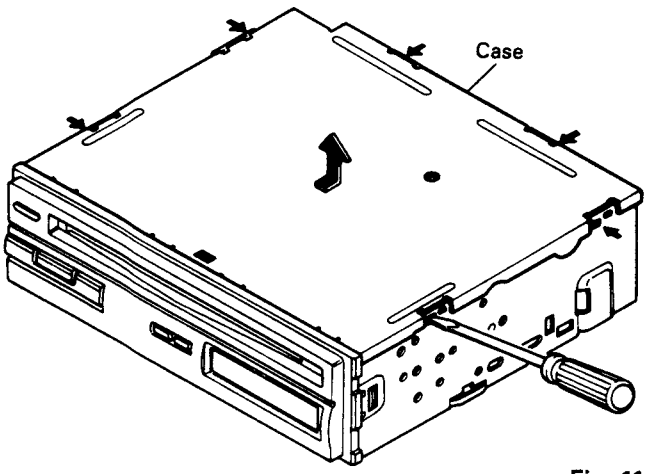

Fig. 11

- **Removing the Grille Assy**

1. Press claws at three locations indicated by arrows, and pull out grille assy.
2. Disconnect the connector, and then remove the grille assy.

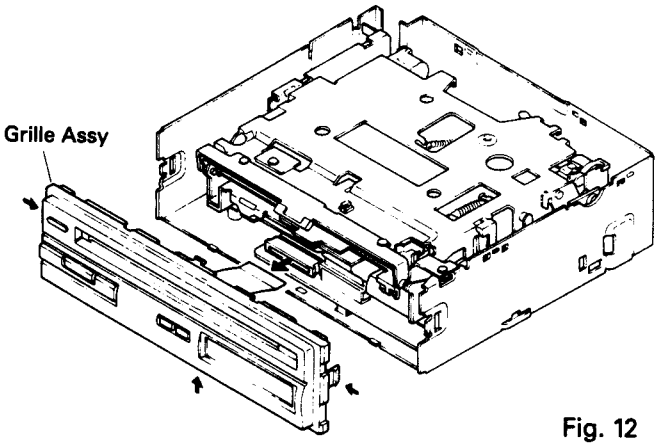

Fig. 12

- **Removing the CD Mechanism Unit**

1. Remove the four screws.
2. Disconnect the two connectors, and then remove the CD mechanism unit.

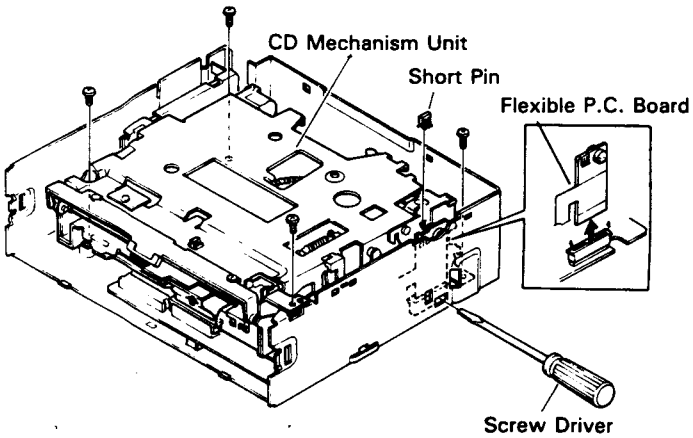

Fig. 13

NOTE: When remove the flexible p.c. board, always insert a shorting pin or insert an inter-pattern short (jumper) before disconnecting the flexible p.c. board from the connector.

6. BLOCK DIAGRAM

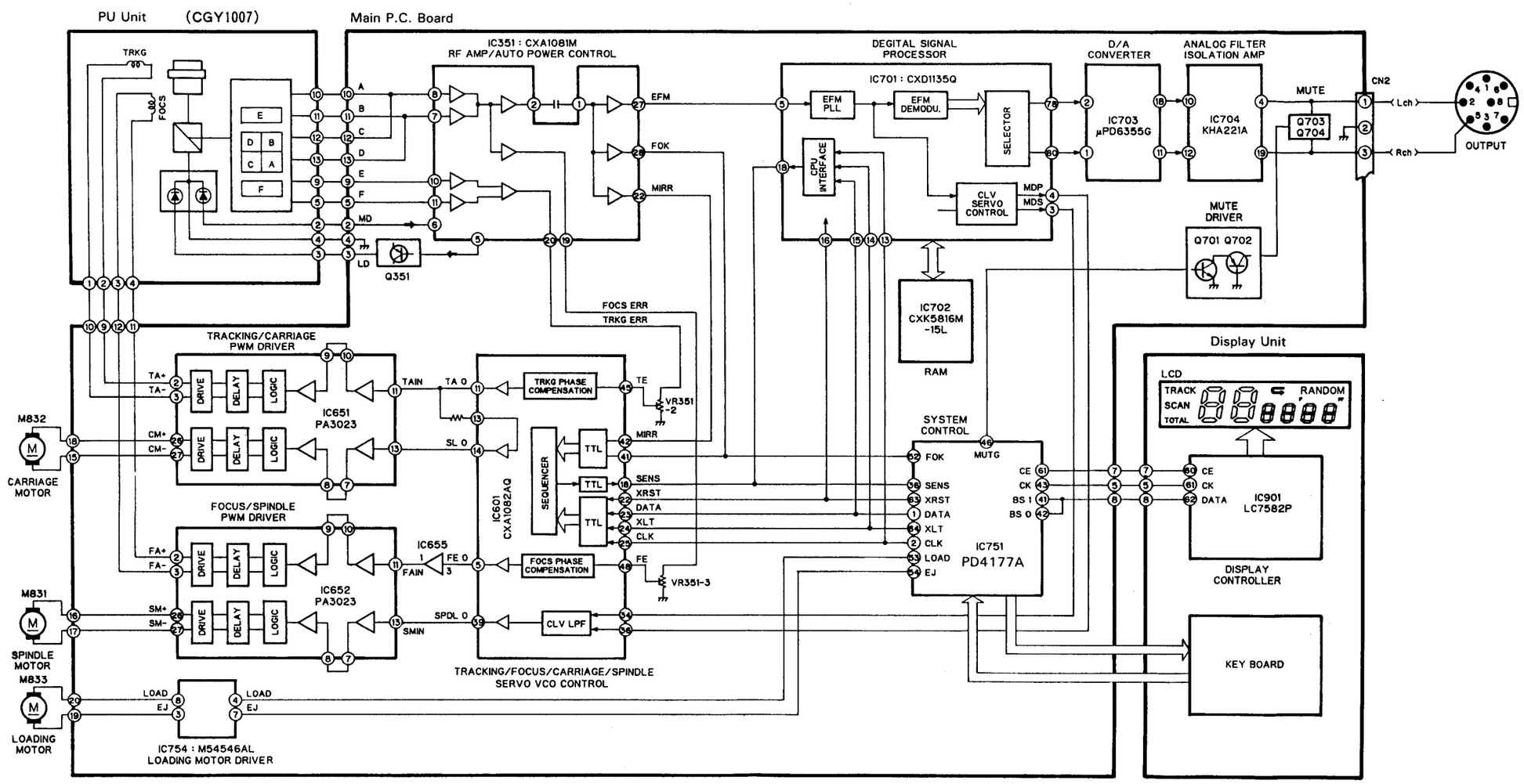

Fig. 14

http://www.manualscenter.com

7. ADJUSTMENT

1) Precautions

- CDX-3 uses a single power supply (+5V) of the regulator. The signal reference botanical, therefore, is connected to pin no. 14 (approx. 2.5V) of IC351 (CXA1081M) instead of GND. (VC at test point)

If VC and GND are connected to each other by mistake during adjustments, not only will it be impossible to measure the potential correctly, but the servo will malfunction and a severe shock will be applied to the pick-up. To avoid this, take special note of the following.

Do not connect the negative probe of the measuring equipment to VC and GND together. It is especially important not to connect the channel 1 negative probe of the oscilloscope to VC with the channel 2 negative probe connected to GND.

And since the frame of the measuring instruments is usually at the same potential as the negative probe, change the frame of the measuring instrument to floating status.

If by accident VC comes in contact with GND, immediately switch the regulator or power OFF.

- Always make sure the regulator is OFF when connecting and disconnecting the various filters and wiring required for measurements.
- Before proceeding to further adjustments and measurements after switching regulator ON, let the player run for about one minute to allow the circuits to stabilize.
- Since the protective systems in the unit's software are rendered inoperative in test mode, be very careful to avoid mechanical and/or electrical shocks to the system when making adjustments.
- Test mode starting procedure

1. Connect test point TMODE to GND.
2. Turn ACC ON.

- Test mode cancelation

1. Disconnect test point TMODE from GND.
2. Turn ACC ON.

- Disc detection during loading and eject operations is performed by means of a photo transistor in this unit. Consequently, if the inside of the unit is exposed to a strong light source when the outer casing is removed for repairs or adjustment, the following malfunctions may occur.
  - ○ During PLAY, even if the eject button is pressed, the disc will not be ejected and the unit will remain in the PLAY mode.
  - ○ The unit will not load a disc.

When the unit malfunctions this way, either re-position the light source, move the unit or cover the photo transistor.

2) Adjustment Point

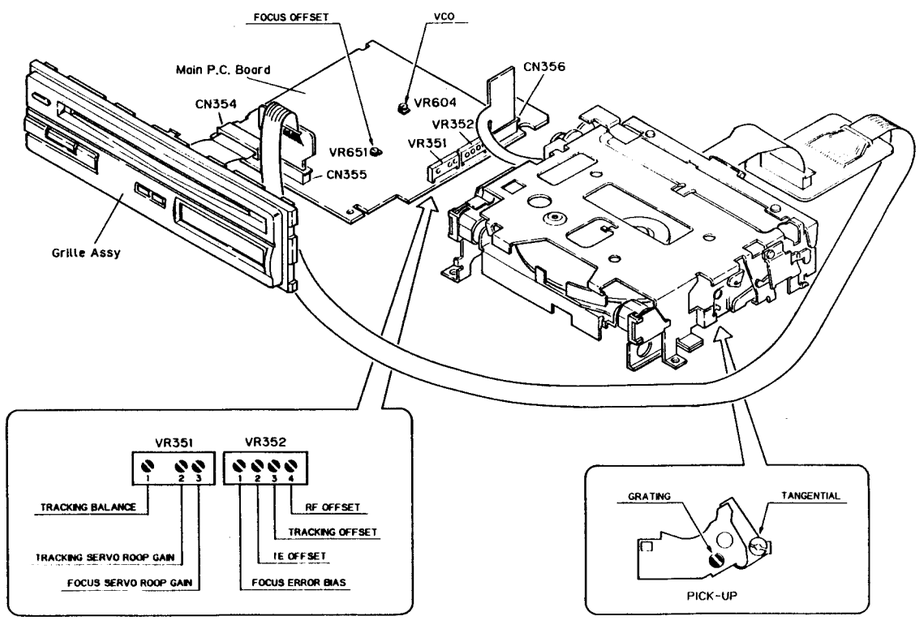

Fig. 15

- **Flow Chart**

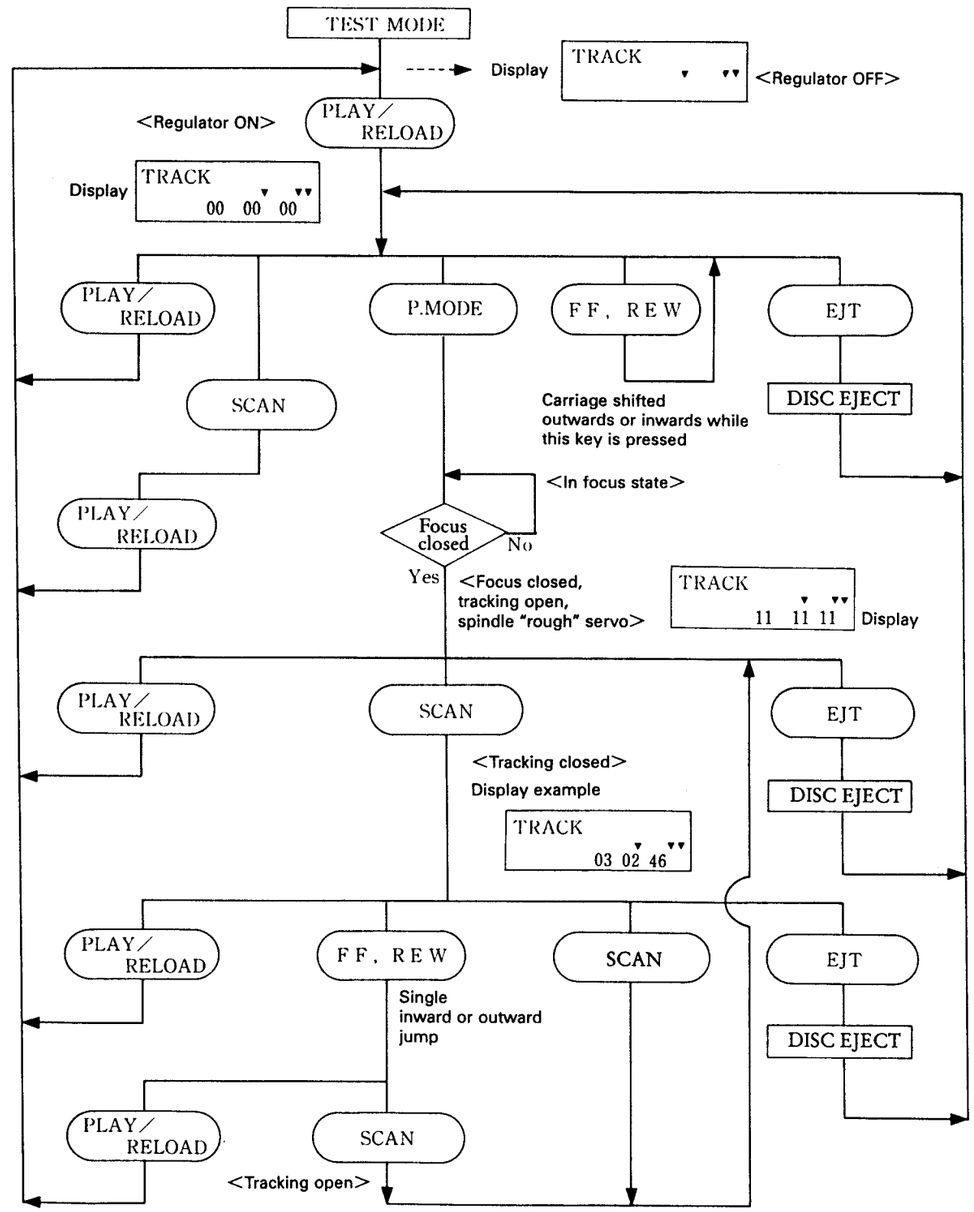

- **Test Point**

Main P.C. Board

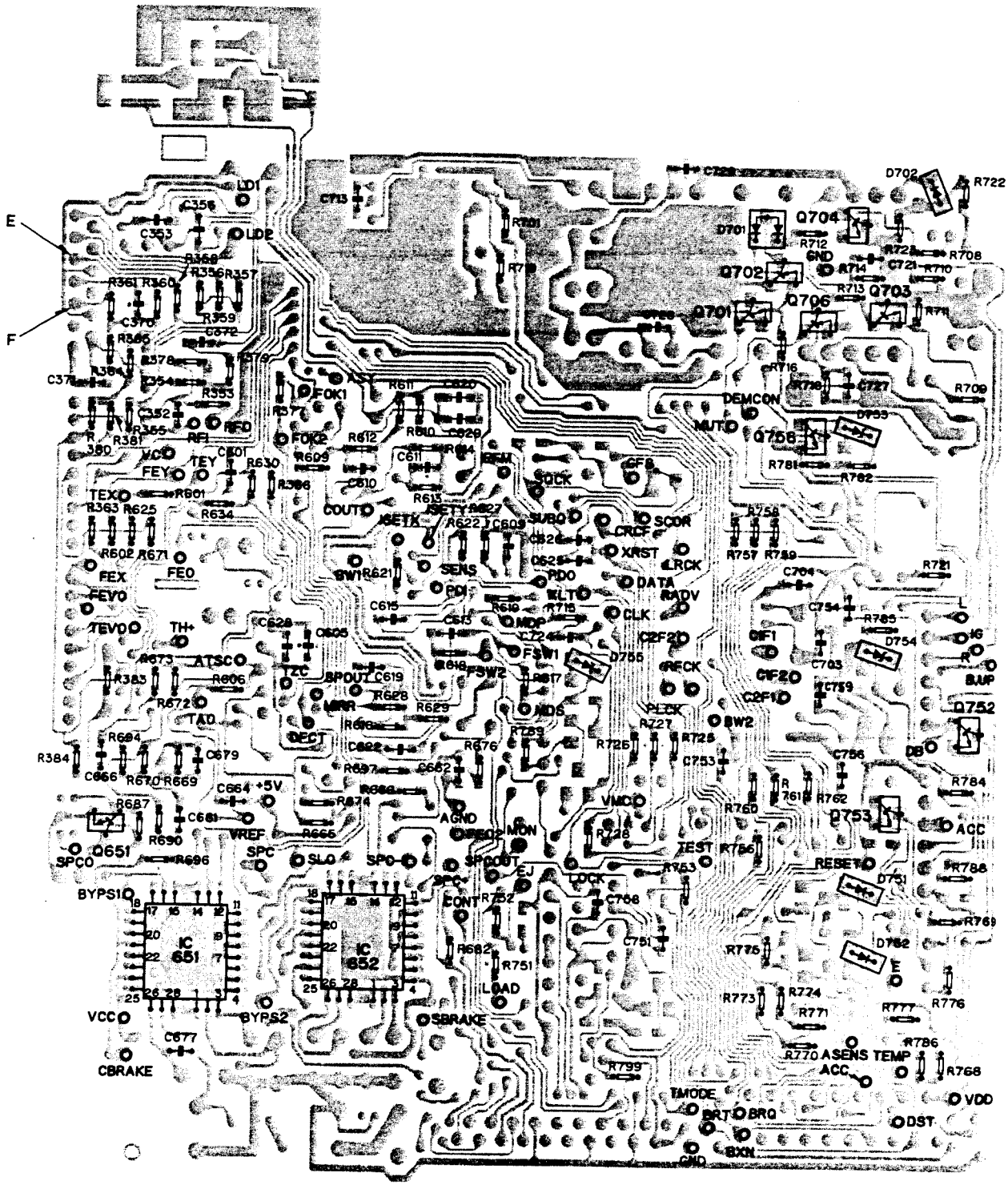

Fig. 16

http://www.manualscenter.com

7.1 Focus Offset Adjustment

● Purpose: To adjust the electrical offset of the focus amplifier to zero.

● Maladjustment symptoms: No focus closing

● Measuring equipment/ jigs	• Multi-meter or oscilloscope
● Measuring point	• FEO2
● Test disc and setting	• No disc, test mode
● Adjustment position	• VR651

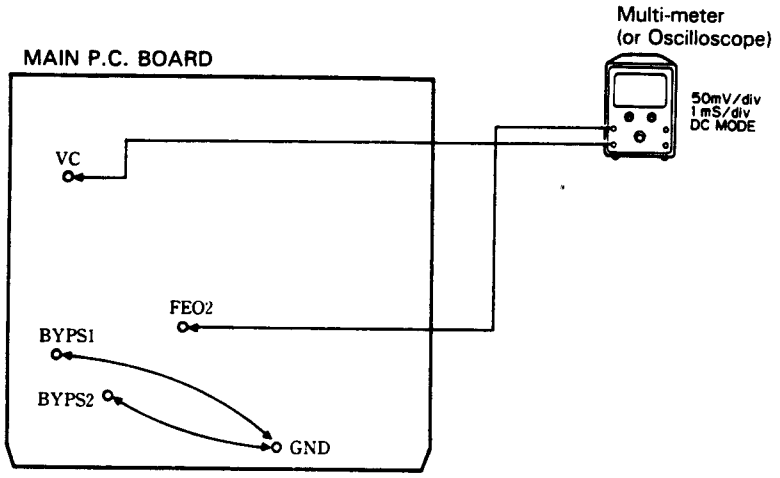

Fig. 17

Adjustment Procedure

1. Connect BYPS 1 and BYPS 2 to GND.
   (Perform the following steps to stop the PWM drive.)
2. Switch regulator ON.
3. Using VR651, adjust the FEO2 DC voltage in reference to VC to a value of 0 ±25mV.
4. Perform the following steps while BYPS 1 and BYPS 2 are connected to GND.

7.2 VCO Free Run Frequency Adjustment

● Purpose: To adjust the EFM decoder reference clock free- run frequency to a suitable value

● Maladjustment symptoms: Spindle lock not possible, distorted sound or no sound at all

● Measuring equipment/ jigs	• Frequency counter, extension cables
● Measuring point	• Pin no.70 (PLCK) of IC701 (CXD1135Q)
● Test disc and setting	• No disc • Test mode
● Adjustment position	• VR604

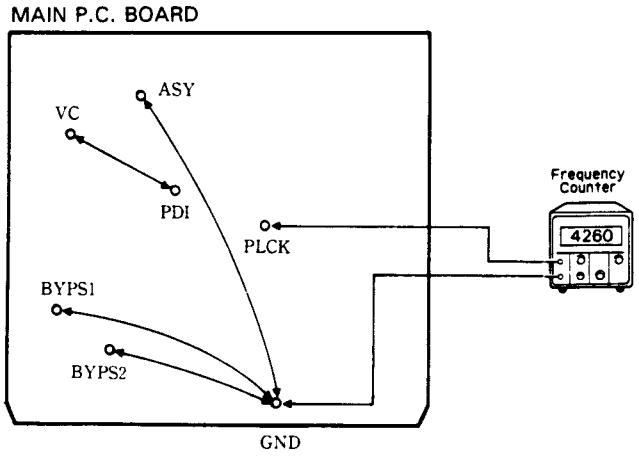

Fig. 18

Adjustment Procedure

1. Connect pin no.26 (TP ASY) of IC351 to GND.
   Connect BYPS 1 and BYPS 2 to GND.
2. Connect pin no.1 (TP VC) of IC601 to pin no.28 (TP PDI).
3. Switch regulator ON while in test mode.
4. Connect the frequency counter to pin no.70 (TP PLCK) of IC701 (CXD1135Q).
5. Adjust VR604 to obtain a frequency of 4.26 ±0.005MHz.
6. Switch regulator OFF.
7. Disconnect the leads connecting TP VC to TP PDI, and TP ASY to GND.

Note: Connect TP VC and TP PDI with leads kept as short as possible.

Note: Connect the frequency counter ground to TP GND as shown in the figure.

7.3 RF Offset Adjustment

● Purpose: To adjust the RF amplifier offset to a suitable value

● Maladjustment symptoms: Focus closure fails readily

● Measuring equipment/ jigs	• Oscilloscope
● Measuring point	• RFO
● Test disc and setting	• No disc • Test mode
● Adjustment position	• VR352-4 (RFO)

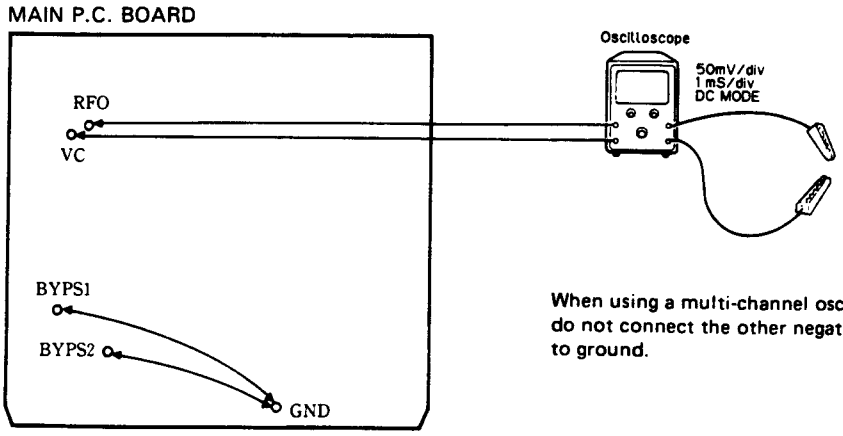

When using a multi-channel oscilloscope, do not connect the other negative probe to ground.

Fig. 19

Adjustment Procedure

1. Connect BYPS 1 and BYPS 2 to GND.
2. Switch regulator ON.
3. Using the oscilloscope, measure the RFO DC voltage in reference to VC, and adjust VR352-4 (RFO) to obtain a reading of +250 ± 25mV.

7.4 Tracking Offset Adjustment

- Purpose: To adjust the electrical offset of the tracking amplifier to zero
- Maladjustment symptoms: Search times too long, carriage run-away

● Measuring equipment/ jigs	• Oscilloscope
● Measuring point	• TAO low-pass filter output
● Test disc and setting	• No disc • Test mode
● Adjustment position	• VR352-3 (TO)

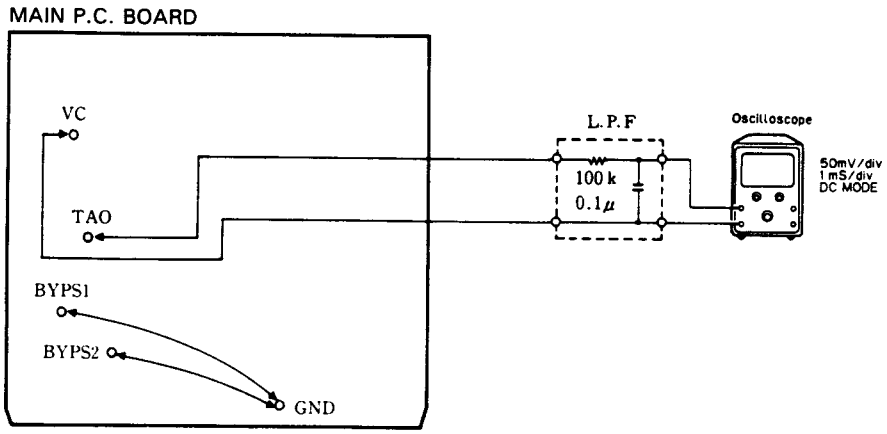

Fig. 20

Adjustment Procedure

1. Insert a low-pass filter between TAO and VC.
2. Check that BYPS 1 and BYPS 2 are connected to GND.
3. Switch regulator ON.
4. Using the oscilloscope, measure the TAO LPF output DC voltage in reference to VC, and adjust VR352-3 (TO) to obtain a reading of 0 ± 25mV.
   The low-pass filter may be left in place for later adjustments.

7.5 TE Offset Adjustment - I

● Purpose: To adjust the electrical offset of the tracking servo to zero.

● Maladjustment symptoms: Search times too long, carriage run-away

● Measuring equipment/ jigs	• DC voltmeter
● Measuring point	• TAO low-pass filter output
● Test disc and setting	• No disc • Test mode
● Adjustment position	• VR352-2 (TEO)

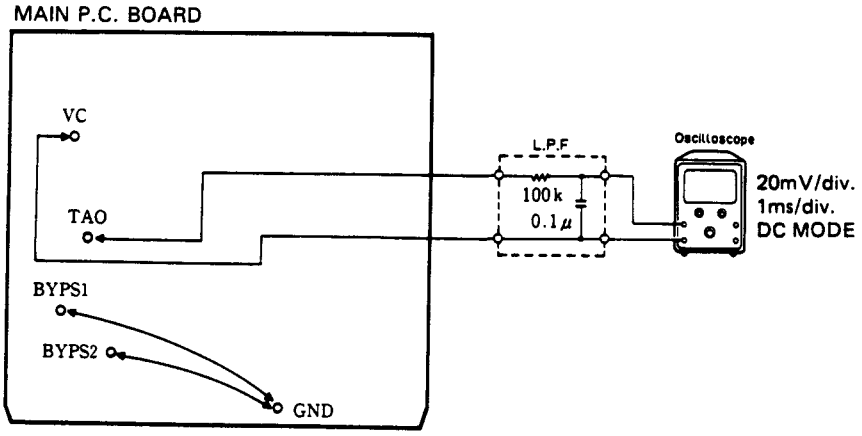

Fig. 21

Adjustment Procedure

1. Check that BYPS 1 and BYPS 2 are connected to GND.
2. Switch regulator ON while in test mode.
3. Press the SCAN key to close tracking.
4. Using VR352-2 (TEO), adjust the TAO LPF output DC voltage in reference to VC to a value of 0 ± 10mV.
5. Switch regulator OFF.

7.6 Tracking Balance Adjustment - I

● Purpose: To adjust the tracking servo offset to zero.

● Maladjustment symptoms: Search times too long, poor playability, carriage run-away

● Measuring equipment/ jigs	• Oscilloscope
● Measuring point	• TEY (Tracking error signal), low-pass filter output
● Test disc and setting	• SONY TYPE 4 (or TYPE 3) • Test mode
● Adjustment position	• VR351-1 (T. BAL)

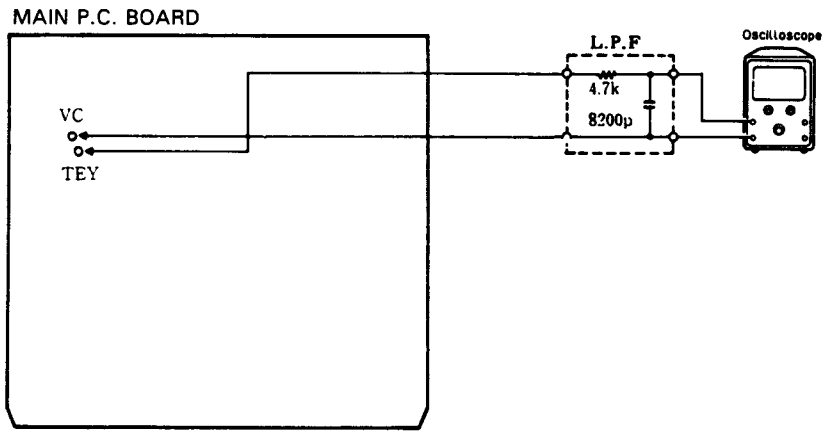

Fig. 22

Adjustment Procedure

1. After checking that regulator is OFF, connect the low-pass filter as shown in the diagram.
2. Disconnect BYPS 1 and BYPS 2 from ground.
3. Load the test disc (SONY TYPE 4). Switch regulator ON.
4. Using the FF or REW key, move the pick-up to about the center of the signal surface.
5. Press the P.MODE key to close focus.
6. Using an oscilloscope, observe the TEY signal in respect to VC. Then adjust VR351-1 (T.BAL) to set the positive and negative amplitudes to the same levels. (See Fig. 23-25)
7. Switch the power OFF.
   The low-pass filter may be left in place for later adjustments.

http://www.manualscenter.com

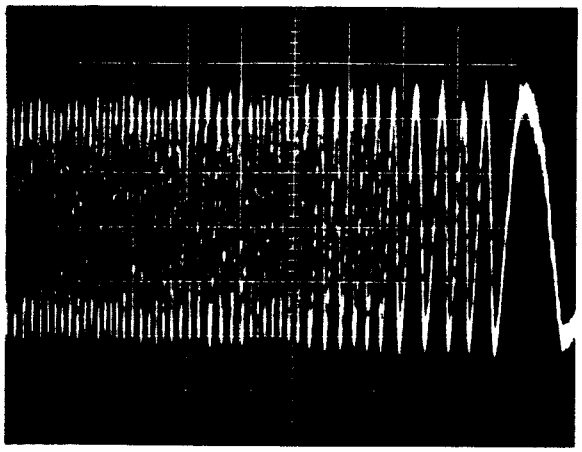

+5% NG

Fig. 23

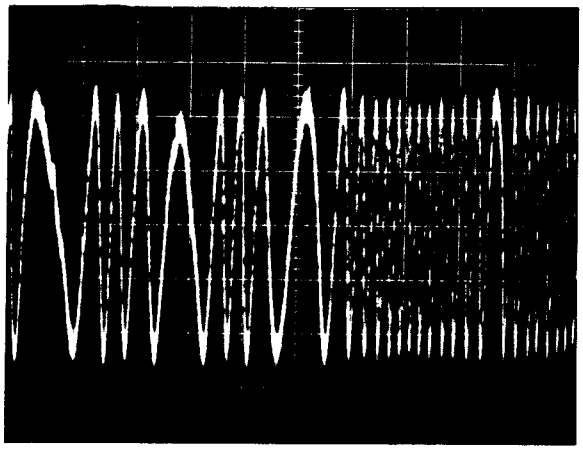

±0% OK

Fig. 24

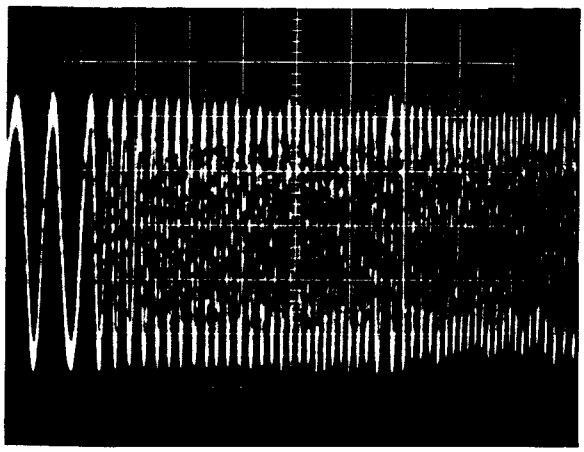

−5% NG

10ms/div.
0.2V/div.
DC Mode

Fig. 25

7.7 Tangential Skew Check

● Purpose: To check whether tangential skew has been misaligned or not when replacing the pick-ip unit.

● Maladjustment symptoms: No disc playback; track jumping

● Measuring equipment/ jigs	• Oscilloscope, extension connectors, screwdriver
● Measuring point	• RFO
● Test disc and setting	• SONY TYPE 4 (or TYPE 3) • Normal mode
● Adjustment position	• Pick-up tangential adjustment screw

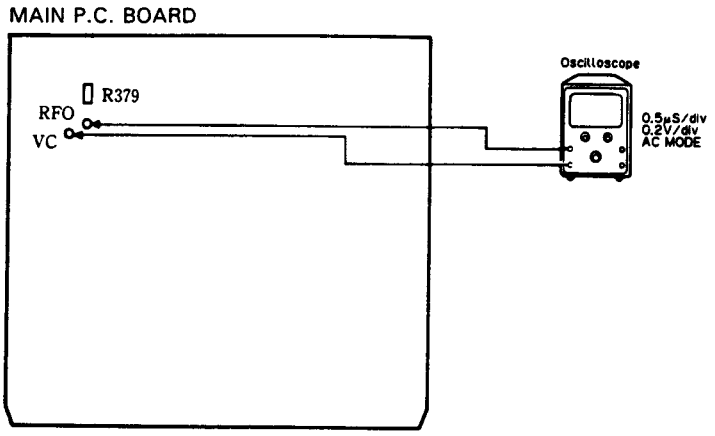

Fig. 26

Adjustment Procedure (with R379 removed)

1. Remove R379 (but reconnect after completing adjustment).
2. Play tune TNO 7 in normal mode. (TYPE 3: TNO 23)
3. Check that the valley at the 11T section of the RF waveform is flat.
4. If out of adjustment, readjust to obtain a flat RF waveform. (See Fig. 27-32) Take care not to knock the pick-up with the screwdriver at this stage. (This kind of accident can result in loss of focus.)
5. Switch the power OFF and reconnect R379.
6. Apply "screw-lock" to the tangential adjustment screw.
7. After adjusting tangential skew, also adjust the grating.
8. If tangential skew is seriously out of adjustment, carriage stopping and run-away tend to occur in normal mode. In this case,

a) Switch to test mode,
b) Shift the pick-up to signal surface center using [FF] or [REW] key.
c) Press the [P.MODE] key to close focus.
d) Press the [SCAN] key to close the tracking.
e) Observe RFO in respect to VC, and turn the tangential adjustment screw to obtain a flat waveform at the 11T section.
f) Repeat the adjustment resuming from step 2.

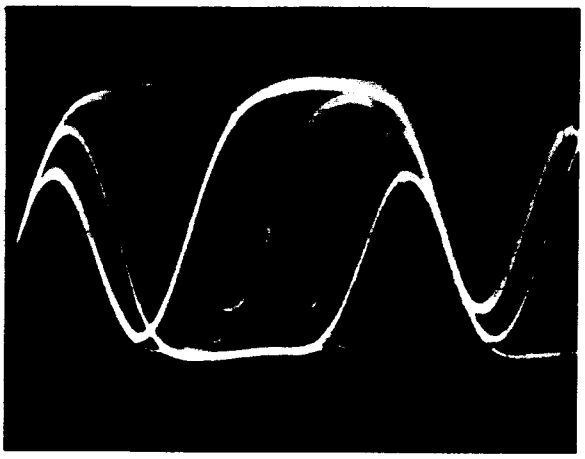

NG Fig. 27

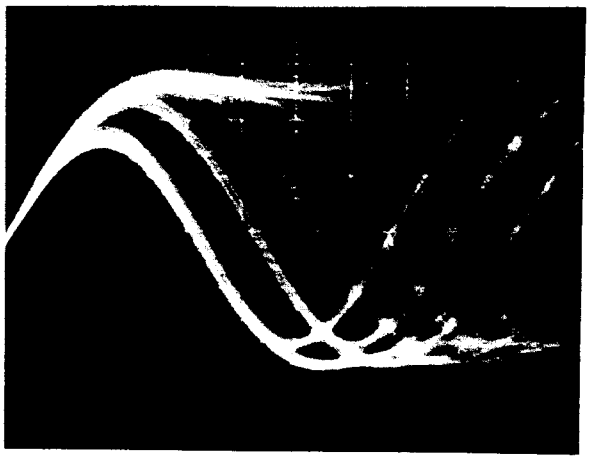

NG Fig. 28

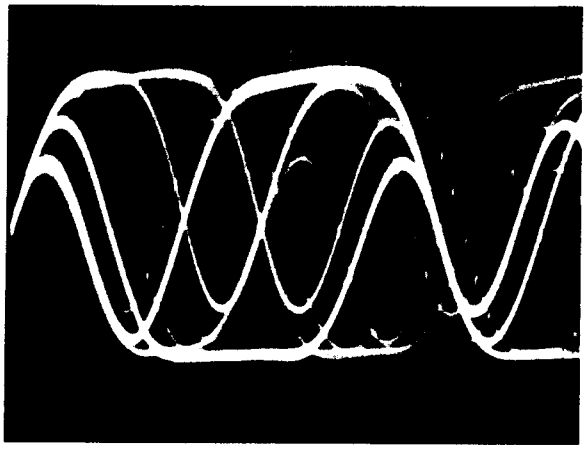

OK Fig. 29

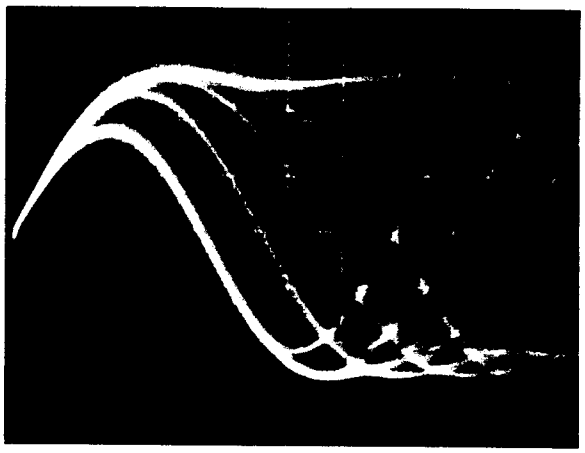

OK Fig. 30

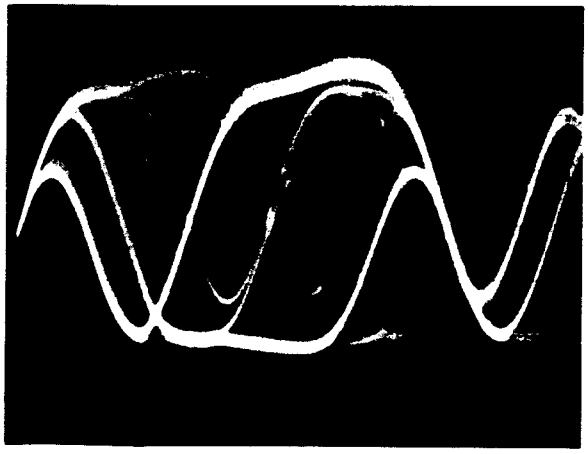

NG Fig. 31

Play tune TNO 7 (TYPE4)

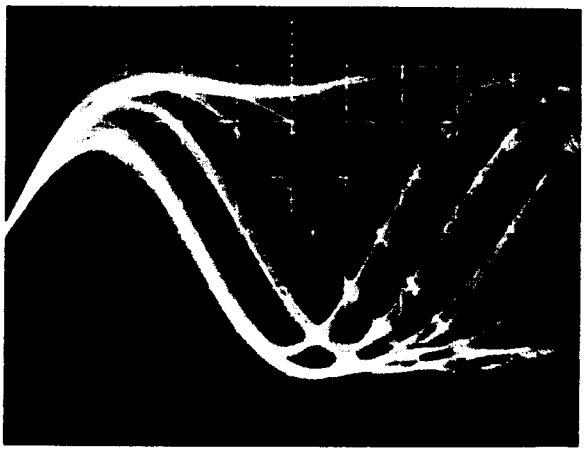

NG Fig. 32

Play tune TNO 12 (TYPE4)

Adjustment Procedure (without R379 removed)

1. Play tune TNO 12 in normal mode. (TYPE 3: TNO 14)
2. Turn the tangential adjustment screw to obtain a good RF waveform eye pattern. Turn the adjustment screw both clockwise and counterclockwise to points where the eye pattern deteriorates, and take the midway point as the adjustment point. As a general guide, look for an overall clear waveform, and one of the diamond shapes in the eye pattern. The diamond shapes should appear in fine lines at the point of optimum adjustment. Take care not to knock the pick-up with the screwdriver at this stage. (This kind of accident can result in loss of focus.) (See Fig. 33-35)
3. Apply "screw-lock" to the tangential adjustment screw.
4. After adjusting tangential skew, also adjust the grating.

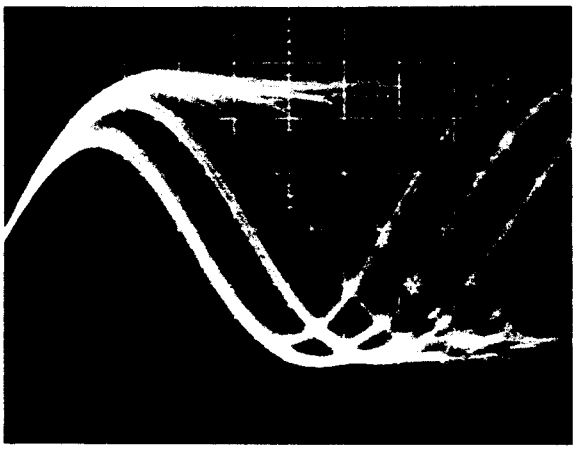

NG Fig. 33

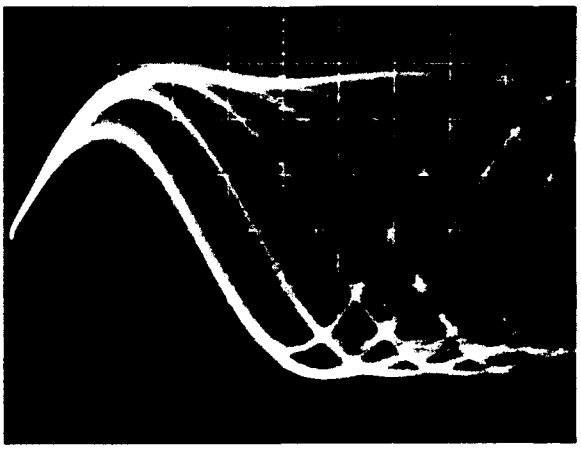

OK Fig. 34

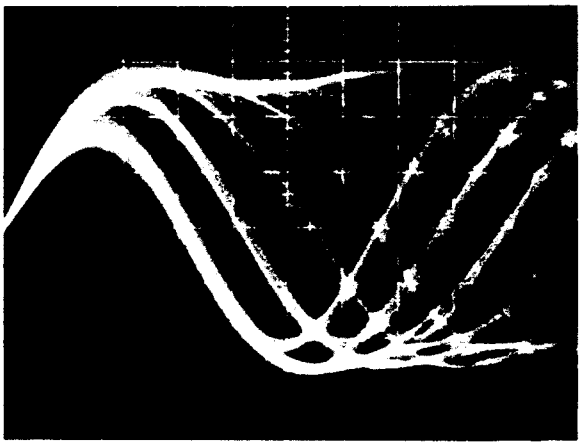

NG Fig. 35

http://www.manualscenter.com

7.8 Grating Adjustment

● Purpose: The grating may need adjustment in a replaced pick-up assembly.

● Maladjustment symptoms: No disc playback; track jumping

● Measuring equipment/ jigs ● Measuring point ● Test disc and setting ● Adjustment position	• Oscilloscope, clock driver, grating adjustment filter (bandpass filter), AC millivoltmeter, two low-pass filters • TEY, E LPF output, F LPF output • SONY TYPE 4 (or TYPE 3) • Test mode • Pick-up grating adjustment hole

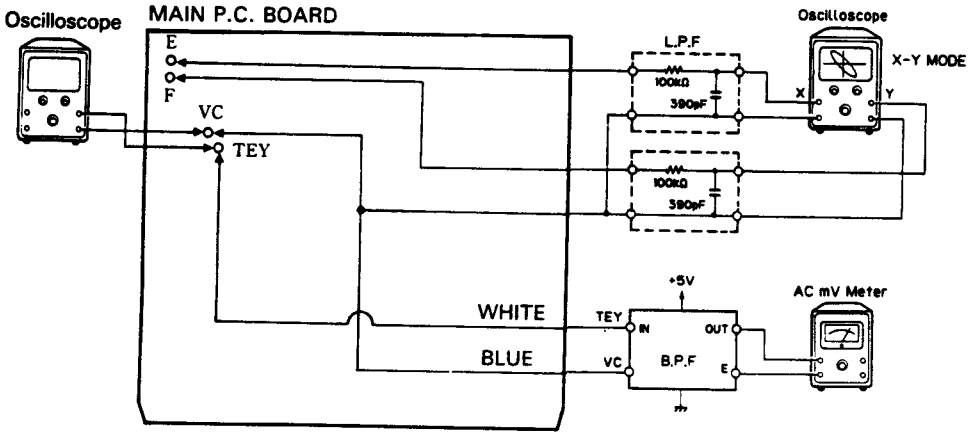

Fig. 36

Adjustment Procedure

1. Connect a low-pass filter (100k, 390p) to test points E, F, and VC as shown in the above diagram.
2. Switch regulator ON in test mode, and load a disc.
3. Press the [P.MODE] key to close focus.
4. Press the [SCAN] key to close tracking.
5. Press the [FF] or [REW] key, move the pick-up to about the center of the signal surface (tune TNO 6). (TYPE 3: TNO 7)
6. Press the [SCAN] key to open tracking.
7. While monitoring the TEY filter output by AC milli- voltmeter, turn the grating adjustment hole slowly. The AC voltage increases and decreases while turning the screw. Search for the minimum voltage level. (This corresponds to the position where the grating is on a track, and is referred to as the null point.)
8. Then while monitoring TEY by oscilloscope, turn the driver slowly clockwise from the null point (as seen from under the lens) until the first waveform peak amplitude is reached. (See Fig. 38-43)

9. With the E low-pass filter output connected to the X axis of the oscilloscope, and the F low-pass filter output connected to the Y axis, apply an input in AC mode and observe the Lissajous figure.
10. Using the driver, adjust the Lissajous figure to a single line (or as close as possible).
11. Switch regulator OFF and remove the filters.

B.P.F.

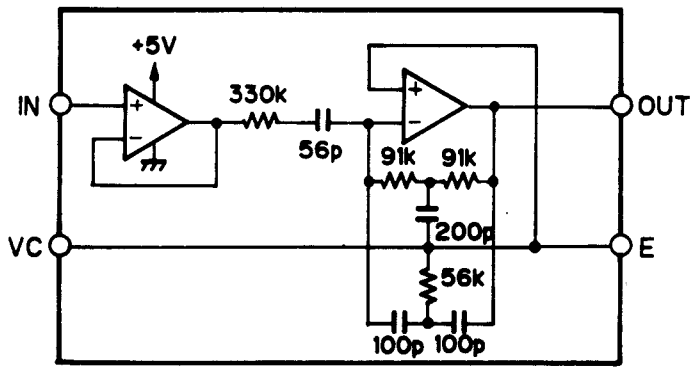

Fig. 37

TEY waveform 10ms/div, 500mV/div

Null Point

Lissajous figure (AC input)
Horizontal axis E 20mV/div
Vertical axis F 20mV/div

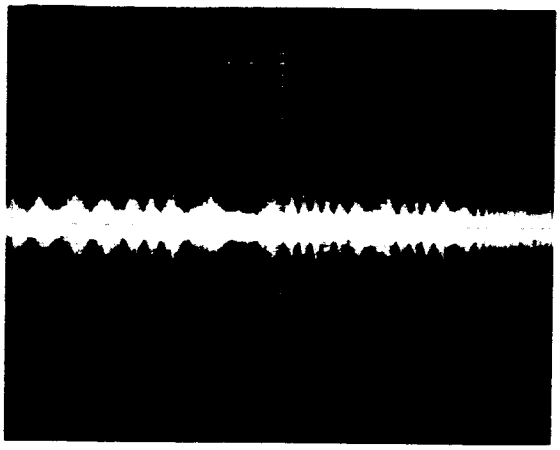

Fig. 38

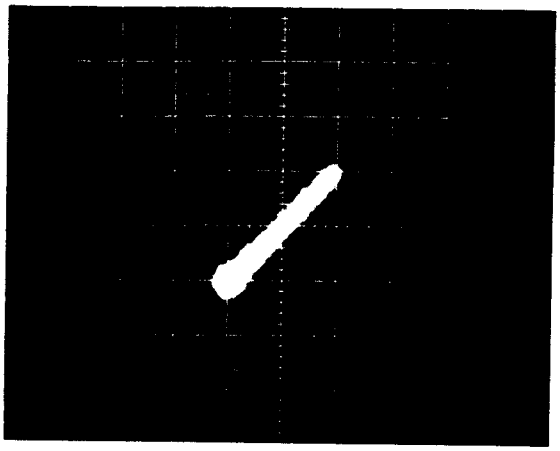

Fig. 39

"Rough" adjustment

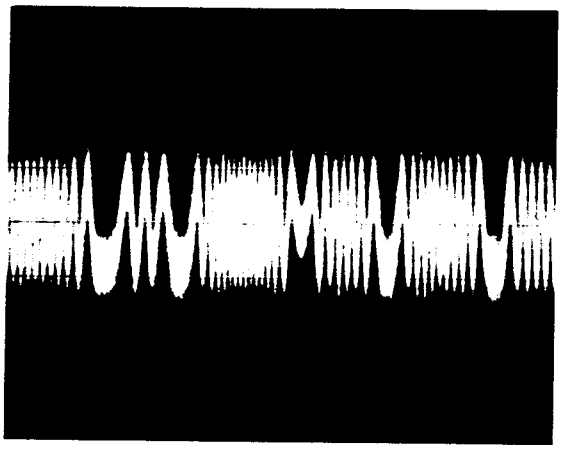

Fig. 40

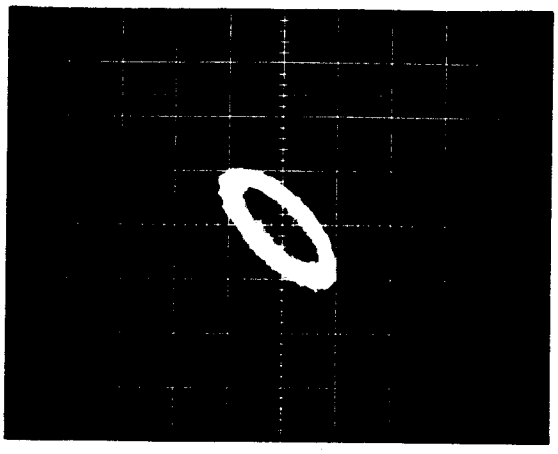

Fig. 41

Final adjustment

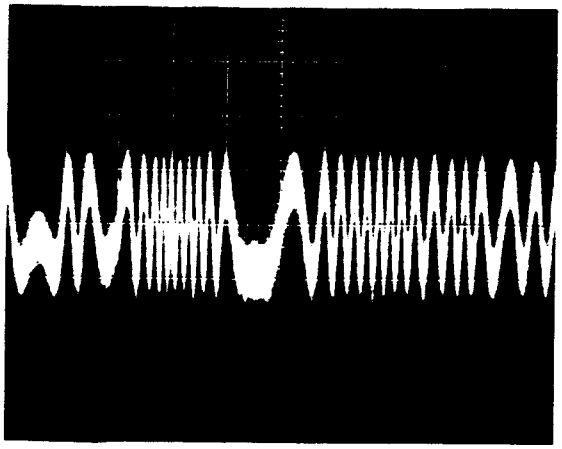

Fig. 42

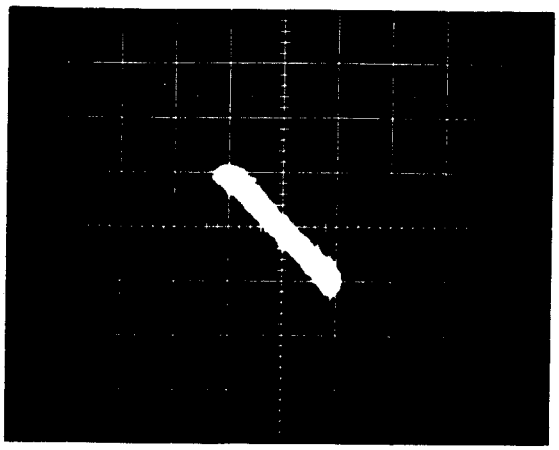

Fig. 43

7.9 Focus Bias Adjustment

● Purpose: To adjust the focus servo bias to an optimum value

● Maladjustment symptoms: Focus closing difficulty, poor playability

● Measuring equipment/ jigs	• Oscilloscope
● Measuring point	• RFO
● Test disc and setting	• SONY TYPE 4 (or TYPE 3) • Normal mode
● Adjustment position	• VR352-1 (FEB)

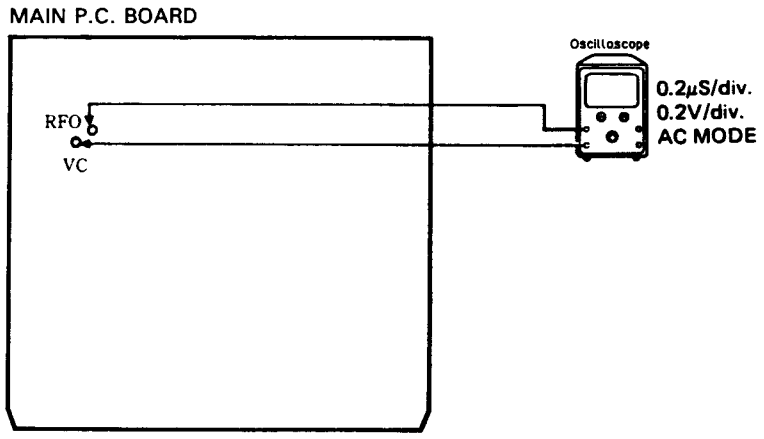

Fig. 44

Adjustment Procedure

1. Play tune TNO 12 in normal mode. (TYPE 3: TNO 14)
2. Observe RFO in respect to VC in the oscilloscope, and adjust VR352-1 (FEB) to obtain maximum RF and optimum eye pattern. (See Fig. 45 and 46)

OK Fig. 45

0.2μs/div.
0.2V/div.
AC Mode

Before adjustment Fig. 46

http://www.manualscenter.com

7.10 Focus Servo Loop Gain Adjustment

- Purpose: To adjust the focus servo loop gain to an optimum value
- Maladjustment symptoms: Poor playability, reduced resistance to vibration, focus closure fails readily

● Measuring equipment/ jigs	• Oscillator, gain adjustment filter, dual meter milli-voltmeter (Same as for CDX-2)
● Measuring point	• FEX, FEY
● Test disc and setting	• SONY TYPE 4 (or TYPE 3) • Normal mode
● Adjustment position	• VR351-3 (FG)

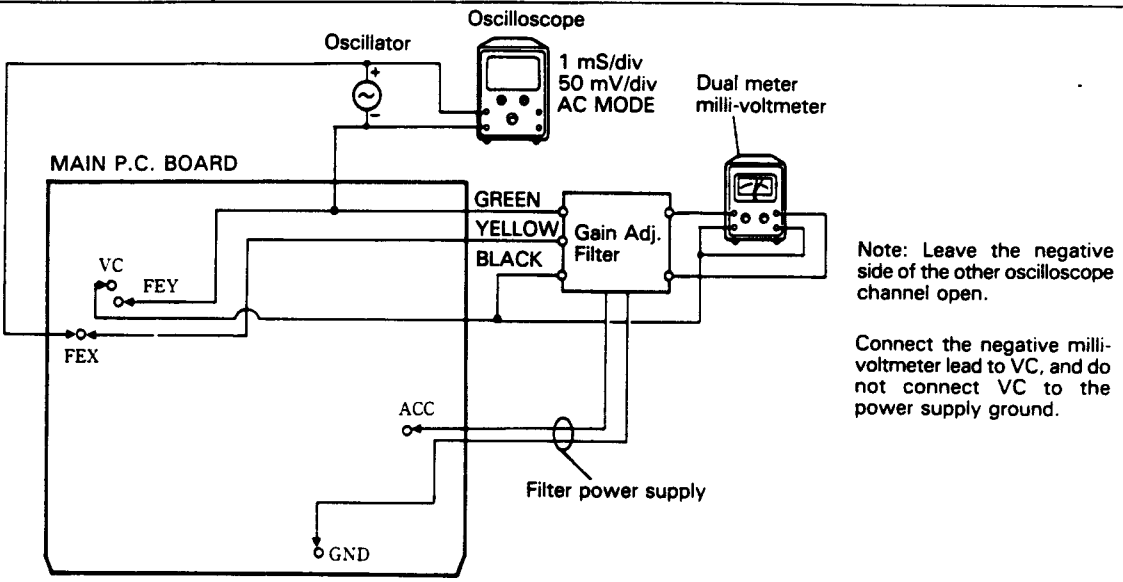

Fig. 47

Adjustment Procedure

1. After checking that the power is OFF, connect the gain adjustment filter and measuring equipment as shown in the above diagram.
2. Play tune TNO 12 in normal mode. (TYPE 3: TNO 14)
3. Set the oscillator to 1kHz, and observe the FEX/FEY output in the oscilloscope. Adjust the oscillator output to obtain a FEX/FEY output of 200mVp-p.
4. Adjust VR351-3 (FG) to obtain a milli-voltmeter difference of 0 ± 0.5dB.

7.11 Tracking Servo Loop Gain Adjustment

● Purpose: To adjust the tracking servo loop gain to an optimum value

● Maladjustment symptoms: Poor playability, reduced resistance to vibration

● Measuring equipment/ jigs	• Oscillator, gain adjustment filter, dual meter milli-voltmeter
● Measuring point	• TEX, TEY
● Test disc and setting	• SONY TYPE 4 (or TYPE 3) • Normal mode
● Adjustment position	• VR351-2 (TG)

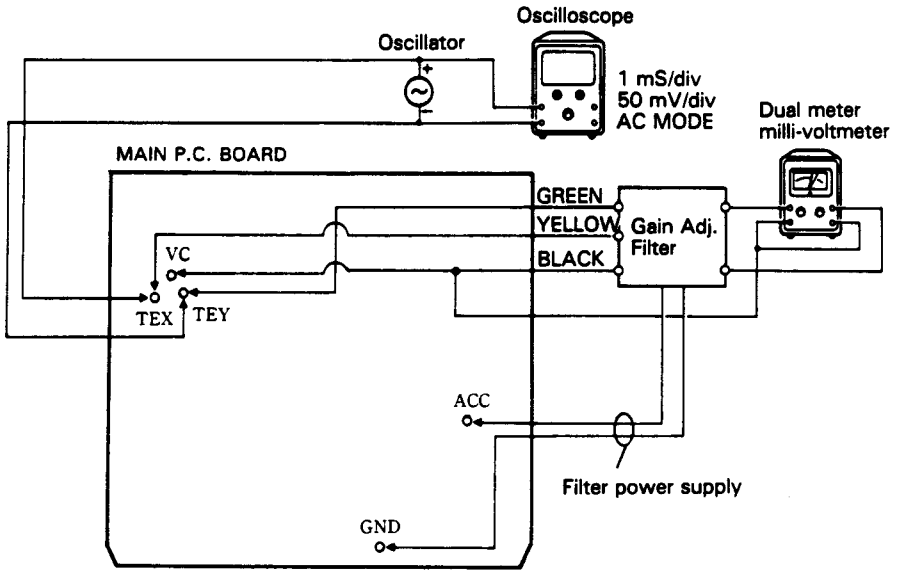

Note: Leave the negative side of the other oscilloscope channel open.

Connect the negative milli-voltmeter lead to VC, and do not connect VC to the power supply ground.

Fig. 48

Adjustment Procedure

1. After checking that the power is OFF, connect the gain adjustment filter and measuring equipment as shown in the above diagram.
2. Play tune TNO 12 in normal mode. (TYPE 3: TNO 14)
3. Set the oscillator to 1.4kHz, and observe the TEX/TEY output in the oscilloscope. Adjust the oscillator output to obtain a TEX/TEY output of 200mVp-p.
4. Adjust VR351-2 (TG) to obtain a milli-voltmeter difference of 0 ± 0.5dB.

7.12 TE Offset Adjustment - II

● Purpose: To adjust the electrical offset of the tracking servo to zero.

● Maladjustment symptoms: Search times too long, carriage run-away

● Measuring equipment/ jigs	• DC voltmeter
● Measuring point	• TAO low-pass filter output
● Test disc and setting	• No disc • Test mode
● Adjustment position	• VR352-2

Adjustment Procedure

Same as for TE offset adjustment - I, but with the DC voltage of the TAO LPF output adjusted to 0 ± 50mV.
The purpose of this additional adjustment is to correct any deviations generated when carrying out the tracking balance and tracking servo loop gain adjustments after completing TE offset adjustment - I.

7.13 Tracking Balance Adjustment - II

● Purpose: To adjust the tracking servo offset to zero.

● Maladjustment symptoms: Search times too long, poor playability, carriage run-away

● Measuring equipment/ jigs	• Oscilloscope
● Measuring point	• TEY low-pass filter output
● Test disc and setting	• SONY TYPE 4 (or TYPE 3) • Test mode
● Adjustment position	• VR351-1

Adjustment Procedure

Steps 1 thru 5 same as tracking balance adjustment-I.

6. Check that the level difference between the positive and negative amplitudes of the TEY signal is within 5% (See Fig. 23-25). If greater than 5%, adjust with VR351-1.
7. If further adjustment was necessary in step 6, repeat TE offset adjustment - II.

• ICs and Transistors

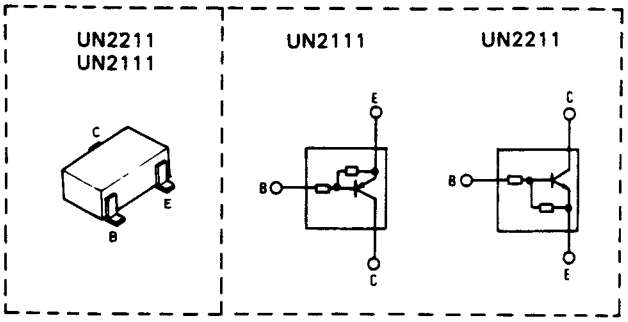

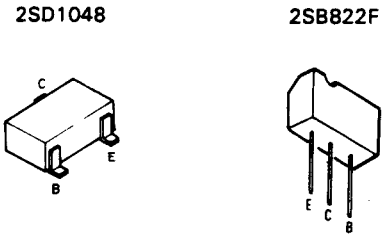

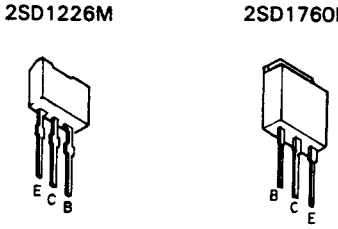

IC901:LC7582P

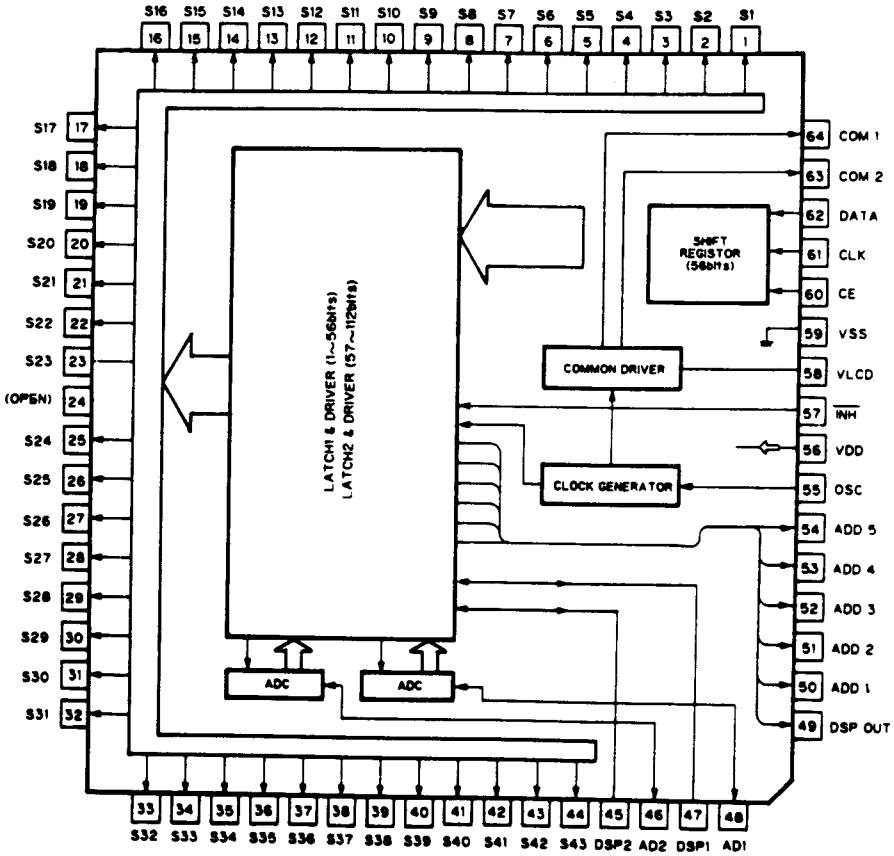

http://www.manualscenter.com

IC754:M54546L

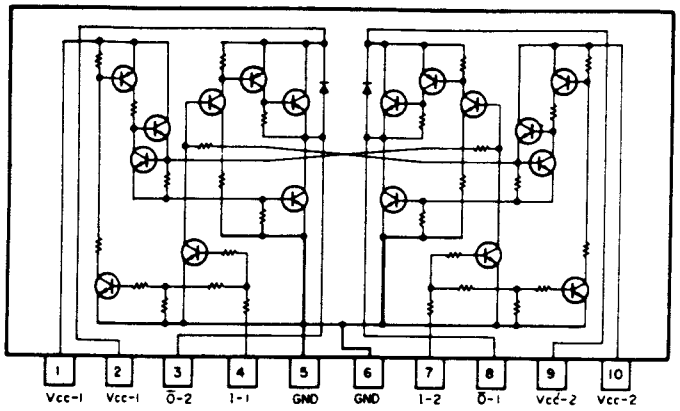

IC752:M51955AFP

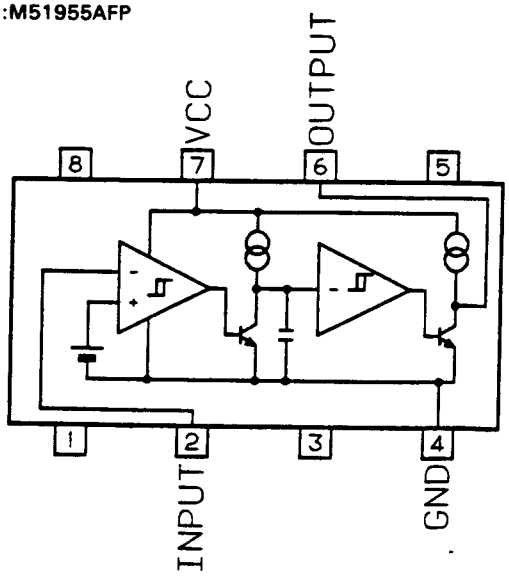

IC704:KHA221A

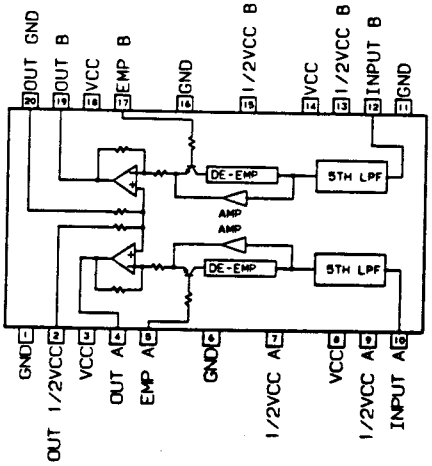

IC655,657,658:M5218FP

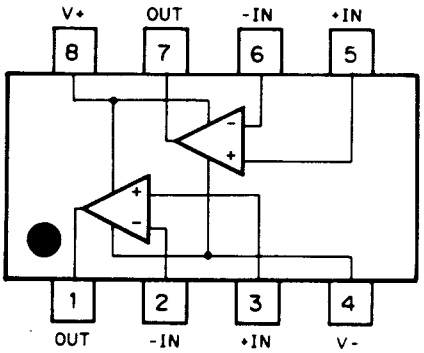

IC656:M5233FP

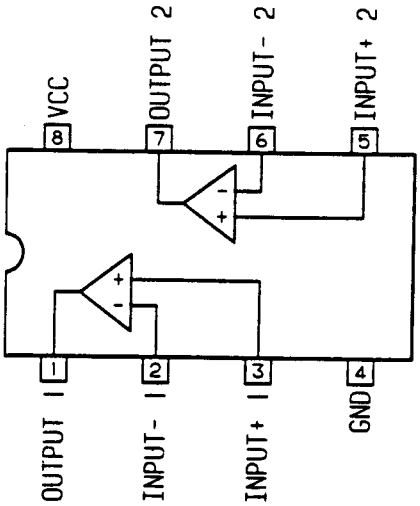

IC753:M51945AFP

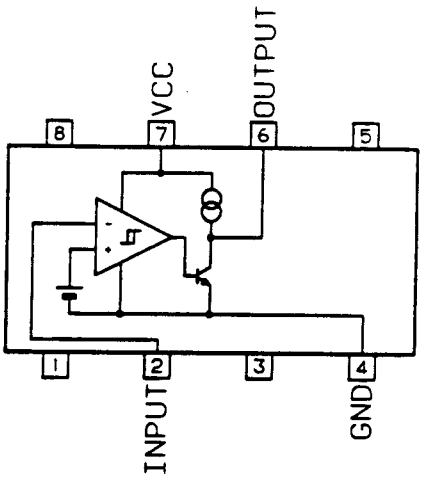

*IC751:PD4177A

*IC's marked by * are MOS type.*
Be careful in handling them because they are very liable to be damaged by electrostatic induction.

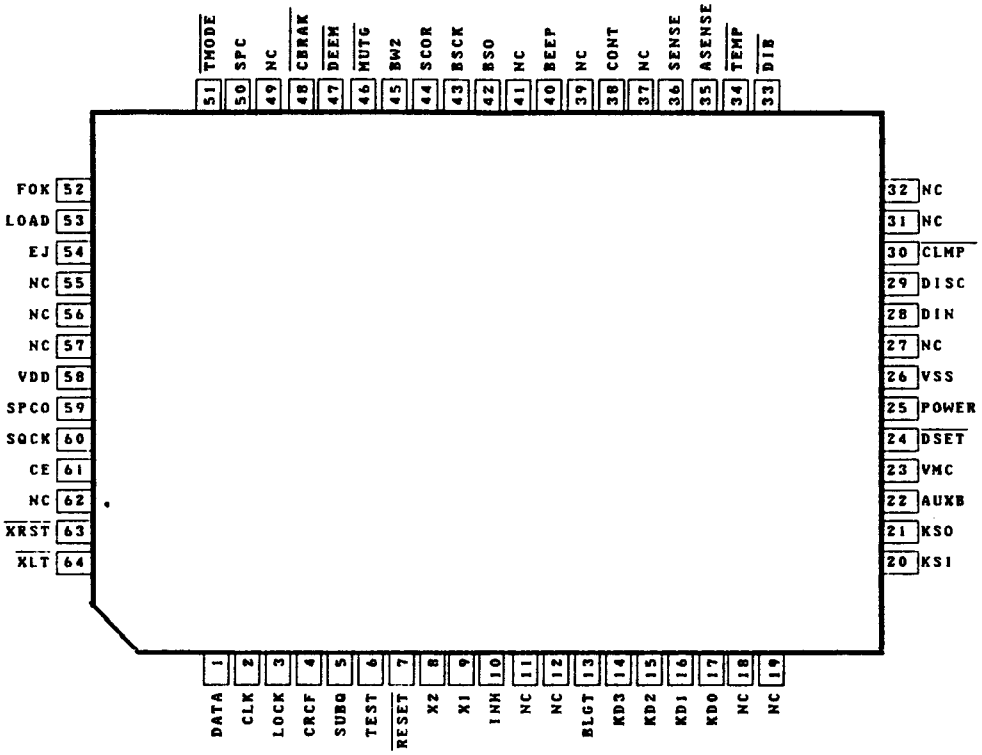

• Pin Functions (PD4177A)

Pin No.	Pin Name	I/O	Function and Operation
1	DATA	CMOS OUT	Serial data output.
2	CLK	CMOS OUT	Serial data clock output.
3	LOCK	CMOS IN	Spindle lock monitor. "H = Lock
4	CRCF	CMOS IN	CRC check result input. "H" = CRC OK
5	SUBQ	CMOS IN	Sub-code data input.
6	TEST	CMOS IN	Test input.
7	$\overline{\text{RESET}}$	CMOS IN	Reset input.
8	X2	CMOS OUT	Oscillator output.
9	X1	CMOS IN	Oscillator input.
10	INH	CMOS OUT	Display driver control "L" = Light OFF
13	BLGT	CMOS OUT	LCD back light control output. "H" = ON
14	KD3	INPUT	Key matrix input.
15	KD2	INPUT	
16	KD1	INPUT	
17	KD0	INPUT	
20	KS1	CMOS OUT	Key matrix output.
21	KS0	CMOS OUT	
22	AUXB	CMOS OUT	AUXB output.
23	VMC	CMOS OUT	Loading power supply control.
24	$\overline{\text{DSET}}$	CMOS OUT	Disc set LED control.
25	POWER	CMOS IN	Regulator ON/OFF control. "H" = Regulator ON

	KD3, KD2	KD1	KD0
KS0	TR+	TR−	PLAY
KS1	P•MODE	SCAN	EJ/STOP

http://www.manualscenter.com

Pin No.	Pin Name	I/O	Function and Operation
26	VSS		
28	DIN	CMOS IN	Door switch input. "H" = Door open
29	DISC	CMOS IN	Disc sensor input. "H" = Disc loaded
30	$\overline{\text{CLMP}}$	CMOS IN	Disc clamped input. "L" = Disc clamped
33	$\overline{\text{DIB}}$	INPUT	DIB input. Disable +B sense.
34	$\overline{\text{TEMP}}$	INPUT	High temperature detector.
35	ASENSE	CMOS IN	ACC sense input. "H" = ACC ON
36	SENSE	CMOS IN	CD LSI internal status monitor input.
38	CONT	CMOS OUT	PWM driver ON/OFF. "H" = ON
40	BEEP	CMOS OUT	Beep output. f = 4kHz
42	BSO	CMOS OUT	Display driver serial data output.
43	BSCK	CMOS OUT	Display driver serial clock output.
44	SCOR	CMOS IN	Sub-code synchronization input.
45	BW2	OUTPUT	Spindle motor output filter time constant selection output. High resistivity N channel open drain
46	$\overline{\text{MUTG}}$	OUTPUT	Muting output. "L" = Mute ON High resistivity N channel open drain
47	$\overline{\text{DEEM}}$	OUTPUT	Emphasis selector output. "H" = Emphasis ON High resistivity N channel open drain
48	$\overline{\text{CBRAK}}$	OUPUT	PWM driver brake control. "L" = Brake ON High resistivity N channel open drain
50	SPC	CMOS IN	Spindle motor rpm sensor circuit. "L" = Low speed
51	$\overline{\text{TMODE}}$	OUTPUT	Test mode input.
52	FOK	CMOS IN	Indication that focus is closed and RF input is active.
53	LOAD	OUTPUT	Motor drive output.
54	EJ		High resistivity N channel open drain

LOAD	H	L	H
EJ	L	H	H
	Load	Eject	Stop

58	VDD	–	
59	SPCO	CMOS OUT	Spindle motor rpm sensor circuit ON/OFF. "H" = Brake
60	SQCK	CMOS OUT	Sub-code clock.
61	CE	CMOS OUT	Display driver select.
63	$\overline{\text{XRST}}$	CMOS OUT	CD LSI reset output . "L" = Reset
64	$\overline{\text{XLT}}$	CMOS OUT	Serial data latch output.

IC651,652:PA3023

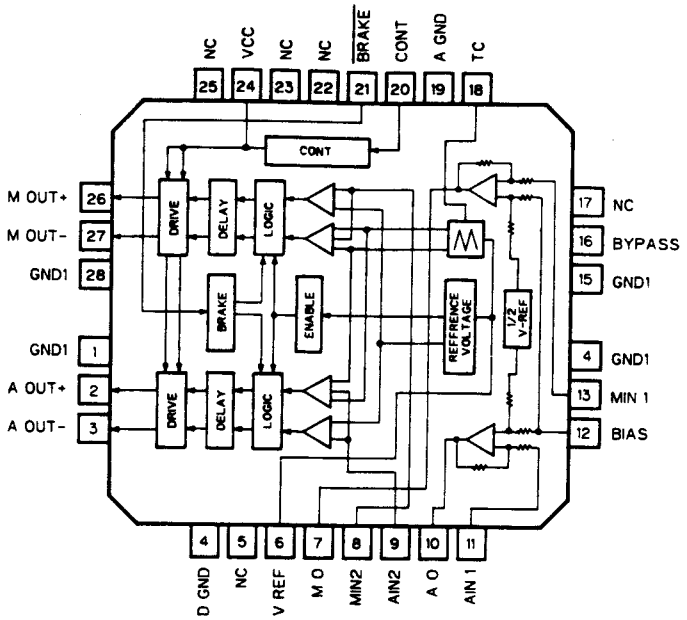

Pin Functioons (PA3023)

Pin	Pin Name	I/O	Function and Operation
1	GND1	–	Sub GND.
2	AOUT +	Output	Positive actuator drive output.
3	AOUT –	Output	Negative actuator drive output.
4	DGND	–	Power stage GND.
5	NC	–	
6	Vref	–	IC stabilizing reference voltage output.
7	MO	Output	Analog signal output for motor.
8	MIN2	Input	Analog signal input 2 for motor.
9	AIN2	Input	Analog signal input 2 for the actuator.
10	AO	Output	Analog signal output for the actuator.
11	AIN1	Input	Analog signal input 1 for the actuator.
12	BIAS	–	External bias input pin.
13	MIN1	Input	Analog signal input 1 for the motor.
14	GND1	–	Sub GND.
15	GND1	–	Sub GND.
16	BYPASS	–	Ripple filter condensor connection pin for IC stabilizing reference voltage.
17	NC	–	
18	TC	–	Condenser connection pin for obtaining triangle waveform.
19	AGND	–	Small signal GND.
20	CONT	Input	Circuit operation/standby switch input. Active H
21	$\overline{\text{BRAKE}}$	Input	Motor operation/non-operation switch input. Active L
22	NC	–	
23	NC	–	
24	Vcc	–	ACC power supply.
25	NC	–	
26	MOUT +	Output	Positive motor driver output.
27	MOUT –	Output	Negative motor driver output.
28	GND1	–	Sub GND

*IC351 : CXA1081M

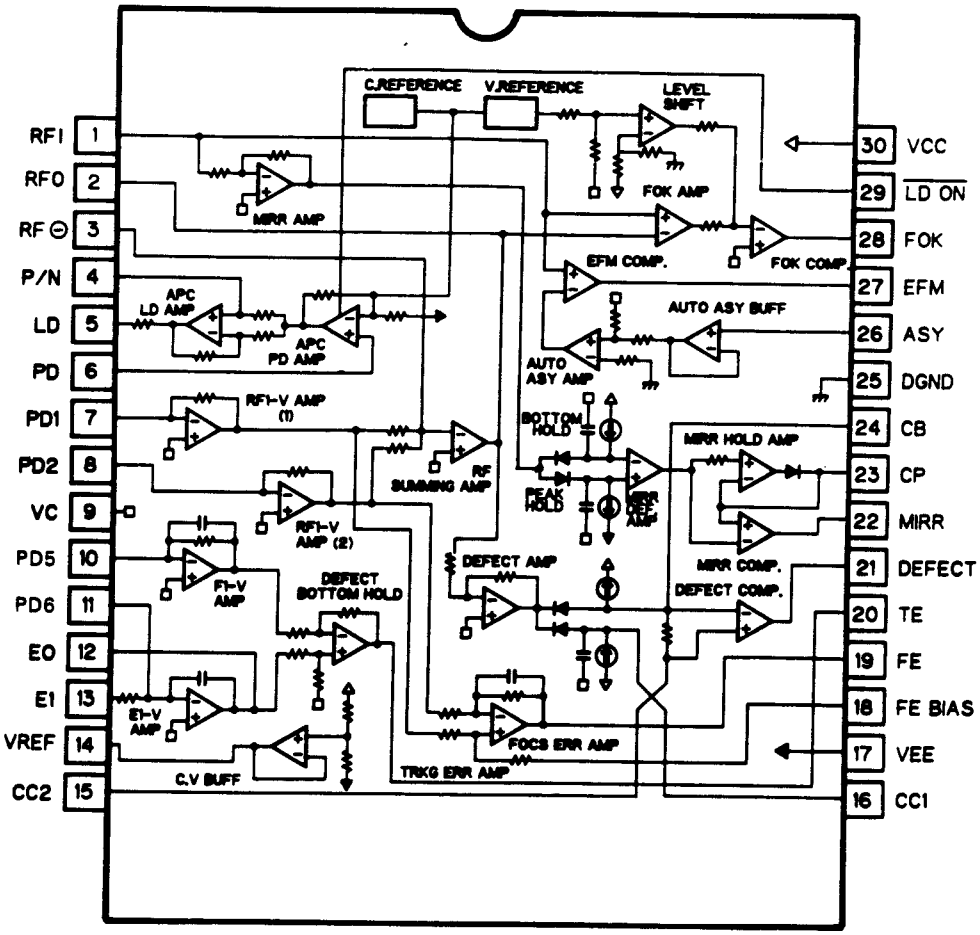

http://www.manualscenter.com

● Pin Functions (CXA1081M)

Pin No.	Pin Name	I/O	Function and Operation
1	RFI	Input	Input of capacitance-coupled RF summing amplifier output
2	RFO	Output	RF summing amplifier output pin - eye pattern check point
3	RF –	Input	RF summing amplifier feedback input pin
4	P/N	Input	Laser diode P-sub/N-sub selector pin
5	LD	Output	APC LD amplifier output pin
6	PD	Input	APC PD amplifier input pin
7	PD1	Input	RF I-V amplifier (1) inverter input pin - connected to photodiode A + C pin for current input
8	PD2	Input	RF I-V amplifier (2) inverter input pin - connected to photodiode B + D pin for current input
9	VC		Connected to VR
10	F	Input	I-V amplifier inverter input pin - connected to photodiode for current input
11	E	Input	I-V amplifier inverter input pin - connected to photodiode for current input
12	EO	Output	E I-V amplifier output pin
13	EI	Input	E I-V amplifier feedback input pin for E I-V amplifier gain adjustment
14	VR	Output	$(V_{CC} + V_{EE})/2$ DC voltage output pin
15	CC2	Input	Input of capacitance-coupled DEFECT bottom hold output
16	CC1	Output	DEFECT bottom hold output pin
17	VEE		Ground connection
18	FE BIAS	Input	Focus error amplifier non-inverting bias pin Used in focus error amplifier CMR adjustment
19	FE	Output	Focus error amplifier output pin
20	TE	Output	Tracking error amplifier output pin
21	DEFECT	Output	DEFECT comparator output pin
22	MIRR	Output	MIRR comparator output pin
23	CP	Input	MIRR hold capacitor connector pin - MIRR comparator non-inverting input pin
24	CB	Input	DEFECT bottom hold capacitor connector pin
25	DGND		Ground connection
26	ASY	Input	Auto asymmetry control input pin
27	EFM	Output	EFM comparator output pin
28	FOK	Output	Focus OK comparator output pin
29	$\overline{\text{LDON}}$	Input	Laser diode ON/OFF switching
30	VCC		Positive power supply pin

*IC601:CXA1082AQ

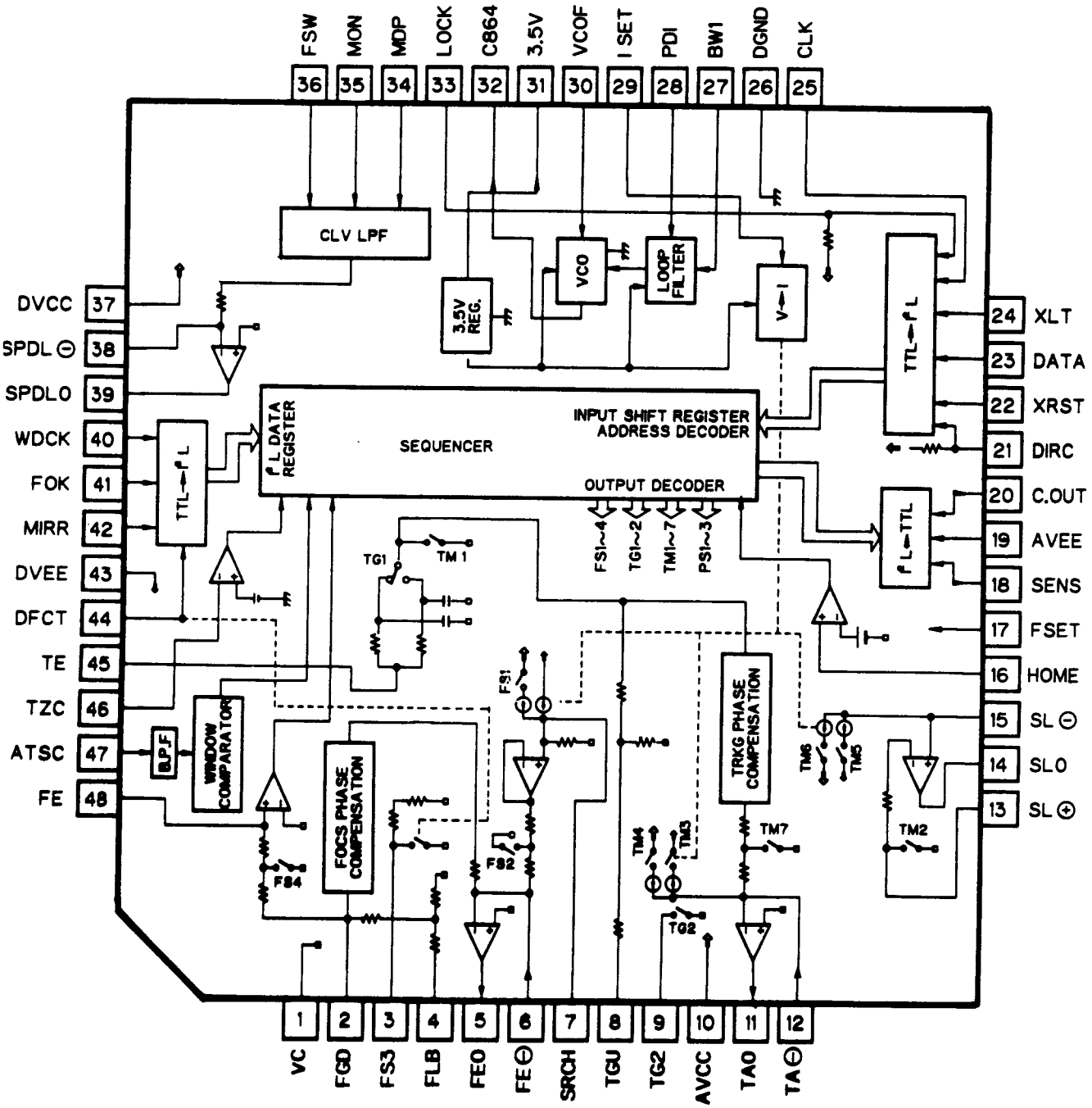

http://www.manualscenter.com

● Pin Functions (CXA1082AQ)

Pin No.	Pin Name	I/O	Function and Operation
1	VC		Servo reference voltage input pin
2	FGD		Connect to pin 3 to switch focus servo OFF when defect occurs
3	FS3		Internal DFCT switch closed when pin 44 is high
4	FLB		Focus servo low region boost external time constant pin
5	FEO	Output	Focus drive output - connect to low-end equalizer
6	FE−	Input	Focus amplifier inverter input pin
7	SRCH		Focus search waveform generation external time constant connector pin
8	TGU	Output	Tracking low-end equalizer connection output pin
9	TG2		Pin 7 discharge switch for starting focus search from lens center
10	AVCC		+5V connection
11	TAO	Output	Tracking drive output
12	TA−	Input	Tracking amplifier inverter input pin
13	SL+	Input	Sled amplifier non-inverting input pin
14	SLO	Output	Sled drive output
15	SL−	Input	Sled amplifier inverter input pin
16	HOME	Input	Sled home position detector switch input pin
17	FSET		Focus/tracking phase compensation peak and CLV low-pass filter f_O setting pin
18	SENS	Output	Output of FZC, AS, TZC, SSTOP, and $\overline{\text{BUSY}}$ depending on command from CPU
19	AVEE		AGND connection
20	COUT	Output	Track counter signal output
21	DIRC		Not used
22	XRST	Input	Reset input pin - reset when "L"
23	DATA	Input	Serial data input from CPU
24	XLT	Input	Latch input from CPU
25	CLK	Input	Serial data transfer clock input from CPU
26	DGND		DGND connection
27	BW1		Loop filter external time constant pin
28	PDI	Input	Input of CXD1135 phase comparator output PDO
29	ISET		Current which determines focus search, track jump, and sled kick height
30	VCOF		VCO free-running frequency more or less inversely
31	3.5V	Output	Proportional to resistance value between pins 30 and 31
32	C864	Output	8.64MHz VCO output pin
33	LOCK		Not used
34	MDP		Connect to MDP pin of CXD1135
35	MON		Connect to MON pin of CXD1135
36	FSW		CLV servo error signal low-pass filter external time constant pin
37	DVCC		+5V connection
38	SPDL−	Input	Spindle drive amplifier inverter input pin

Pin No.	Pin Name	I/O	Function and Operation
39	SPDLO	Output	Spindle drive output
40	WDCK	Input	Auto-sequence clock input 176.4kHz
41	FOK	Input	FOK signal input pin
42	MIRR	Input	Mirror signal input pin
43	DVEE		DGND connection
44	DFCT	Input	DEFECT signal input pin - defect countermeasure circuit activated when this input is high
45	TE	Input	Tracking error signal input pin
46	TZC	Input	Tracking zero-cross comparator input pin
47	ATSC	Input	Tracking lens offset detector window comparator input pin
48	FE	Input	Focus error signal input pin

*IC701: CXD1135Q

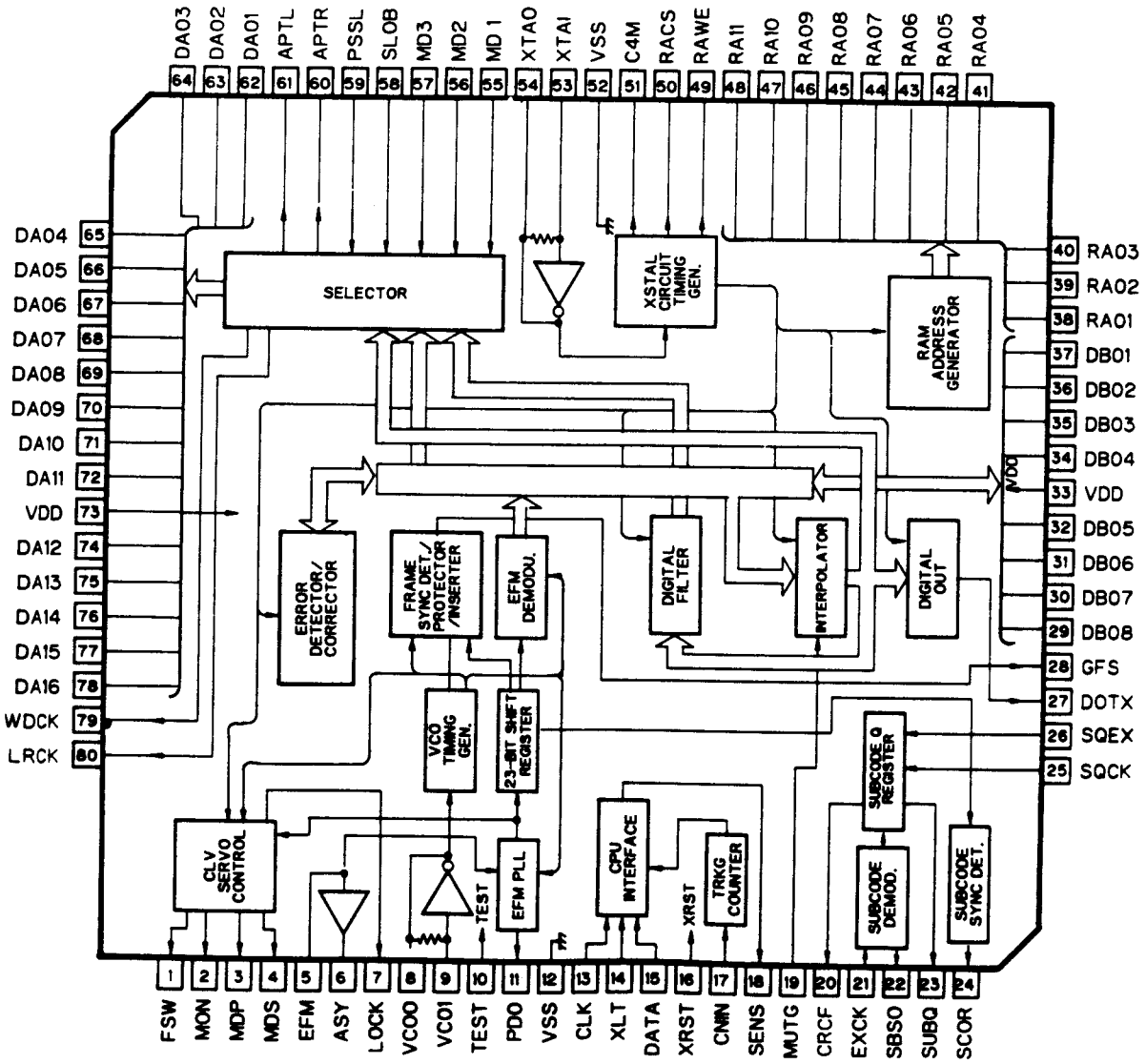

● Pin Functions (CXD1135Q)

Pin No.	Pin Name	I/O	Function and Operation
1	FSW	Output	Spindle motor output filter time constant selector output
2	MON	Output	Spindle motor ON/OFF control output
3	MDP	Output	Spindle motor drive output - "rough" control in CLV-S mode, and phase control in CLV-P mode
4	MDS	Output	Spindle motor drive output - speed control in CLV-P mode
5	EFM	Input	EFM signal input from RF amplifier
6	ASY	Output	EFM signal slice level control output
7	LOCK	Output	Sampling of GFS signal by WFCK/16 - "H" output if "H", "L" output if "L" detected eight times in succession
8	VCOO	Output	VCO output - f = 8.6436MHz when EFM signal is locked
9	VCOI	Input	VCO input
10	TEST	Input	(0V)
11	PDO	Ouptut	EFM signal and VCO/2 phase comparison output
12	V_{SS}	–	Ground (0V)
13	CLK	Input	Serial data transfer clock input from CPU - data latched by clock leading edge
14	XLT	Input	Latch input from CPU - 8-bit shift register data (serial data from CPU) is latched in each register.
15	DATA	Input	Serial data input from CPU
16	XRST	Input	System reset signal input - reset when "L"
17	CNIN	Input	Tracking pulse input
18	SENS	Output	Output of internal status according to address
19	MUTG	Input	Muting input - when ATTM of internal register A is "L", MUTG "L" denotes normal status, and "H" muted status
20	CRCF	Output	Sub-code Q CRC check result output
21	EXCK	Input	Clock input for sub-code serial output
22	SBSO	Output	Sub-code serial output
23	SUBQ	Output	Sub-code Q output
24	SCOR	Output	Sub-code synchronizing S0 + S1 output
25	SQCK	Input/Output	Sub-code Q read clock
26	SQEX	Input	SQCK selector input
27	DOTX	Output	Digital out output ($\overline{WFCK}$ output)
28	GFS	Output	Frame synchronizing lock status indicator output
29	DB08	Input/Output	External RAM data pin - DATA8 (MSB)
30	DB07	Input/Output	External RAM data pin - DATA7
31	DB06	Input/Output	External RAM data pin - DATA6
32	DB05	Input/Output	External RAM data pin - DATA5
33	V_{DD}	–	Power supply (+5V)
34	DB04	Input/Output	External RAM data pin - DATA4
35	DB03	Input/Output	External RAM data pin - DATA3

Pin No.	Pin Name	I/O	Function and Operation
36	DB02	Input/Output	External RAM data pin - DATA2
37	DB01	Input/Output	External RAM data pin - DATA1 (LSB)
38	RA01	Output	External RAM address output - ADDR01 (LSB)
39	RA02	Output	External RAM address output - ADDR02
40	RA03	Output	External RAM address output - ADDR03
41	RA04	Output	External RAM address output - ADDR04
42	RA05	Output	External RAM address output - ADDR05
43	RA06	Output	External RAM address output - ADDR06
44	RA07	Output	External RAM address output - ADDR07
45	RA08	Output	External RAM address output - ADDR08
46	RA09	Output	External RAM address output - ADDR09
47	RA10	Output	External RAM address output - ADDR010
48	RA11	Output	External RAM address output - ADDR011 (MSB)
49	RAWE	Output	External RAM write enable signal output (active "L")
50	RACS	Output	External RAM chip select signal output (active "L")
51	C4M	Output	X'tal frequency division output (f = 4.2336MHz)
52	V_{SS}	–	Ground (0V)
53	XTAI	Input	Crystal oscillator input (f = 8.4672MHz)
54	XTAO	Output	Crystal oscillator output (f = 8.4672MHz)
55	MD1	Input	Mode selector input 1
56	MD2	Input	Mode selector input 2
57	MD3	Input	Mode selector input 3
58	SLOB	Input	Audio data output code selector input - 2's complement output if "L", offset binary output if "H"
59	PSSL	Input	Audio data output mode selector input - serial output if "L", parallel output if "H"
60	APTR	Output	Aperture correction control output - "H" when right channel
61	APTL	Output	Aperture correction control output - "L" when left channel
62	DA01	Output	C1F1 output
63	DA02	Output	C1F2 output
64	DA03	Output	C2F1 output
65	DA04	Output	C2F2 output
66	DA05	Output	C2FL output
67	DA06	Output	C2PO output
68	DA07	Output	RFCK output
69	DA08	Output	WFCK output
70	DA09	Output	$\overline{\text{PLCK}}$ output
71	DA10	Output	UGFS output
72	DA11	Output	GTOP output

8. SCHEMATIC CIRCUIT DIAGRAM

http://www.manualscenter.com

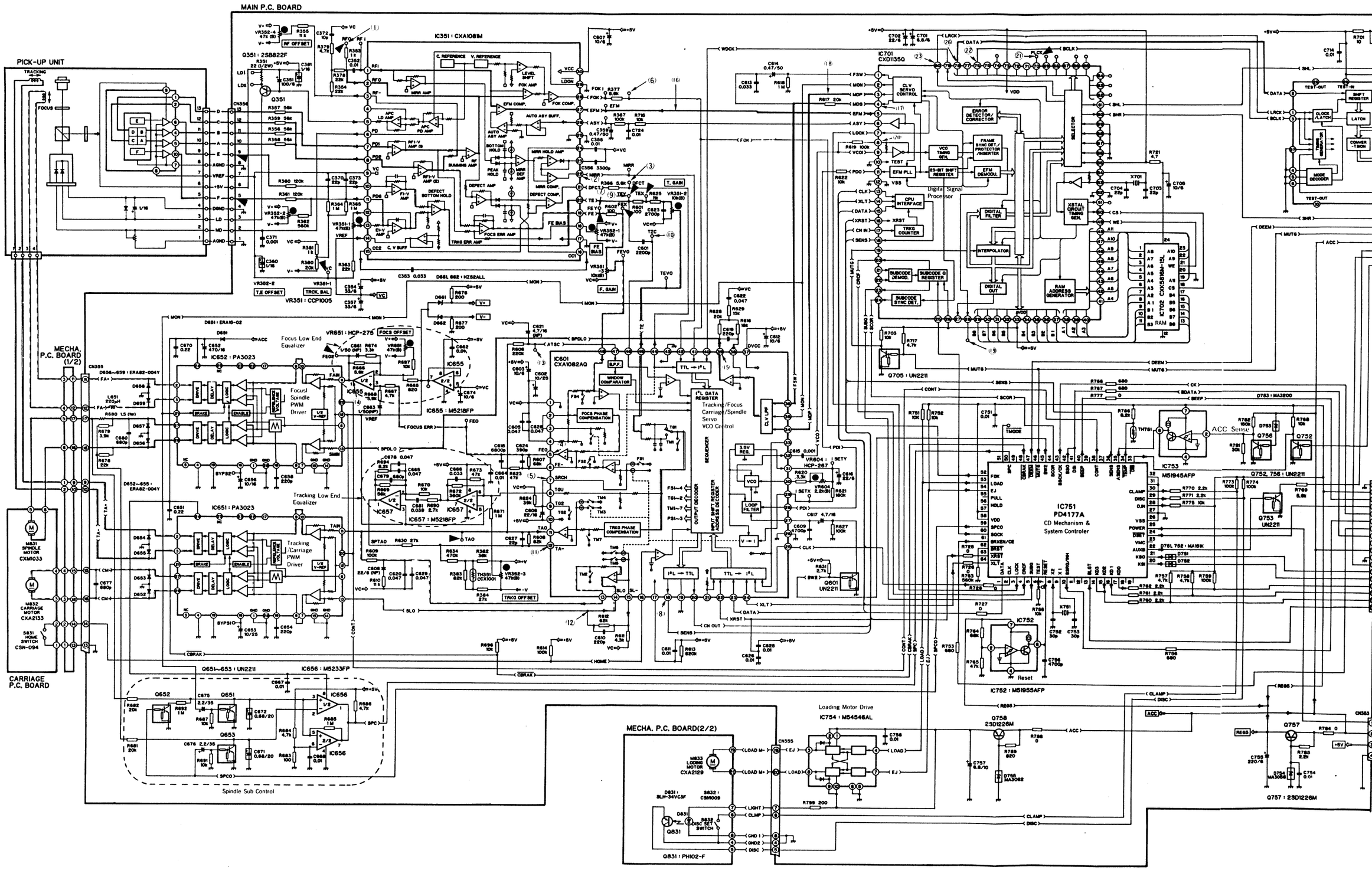

http://www.manualscenter.com

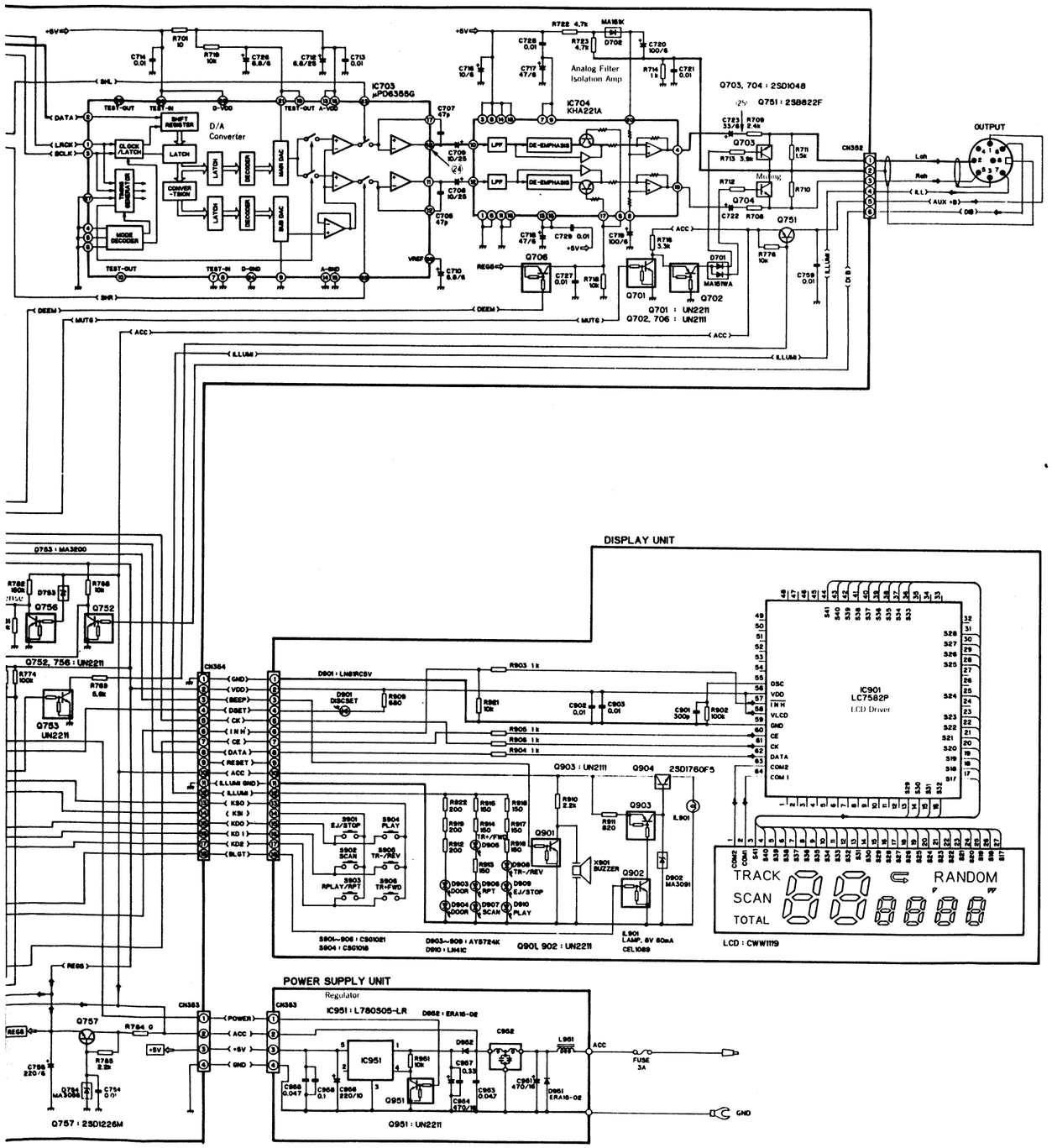

Signal Route
Focus Servo Line
Spindle Servo Line
Tracking Servo Line
Carriage Servo Line

NOTE :

- Indicates a chip resistor.
- Indicates a chip capacitor.
- Indicates a chip transistor.
- Indicates a chip diode.

SWITCHES

S831 : HOME SWITCH ..... ON —— OFF
S832 : DISC SET SWITCH..... ON —— OFF

The underlined indicates the switch position.

• Serial No.00001 – 00500

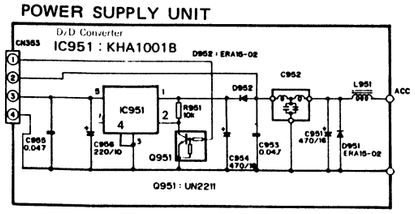

Fig. 49

9. CONNECTION DIAGRAM

http://www.manualscenter.com

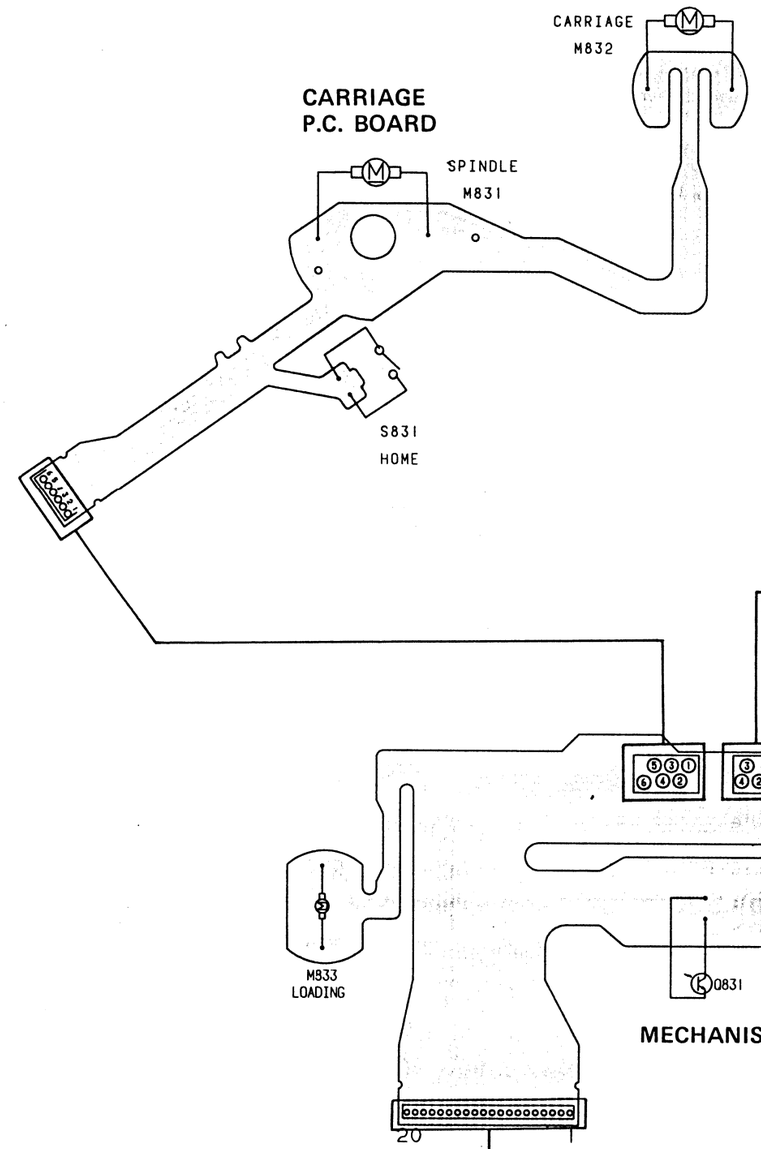

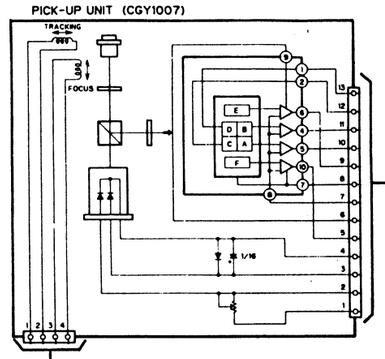

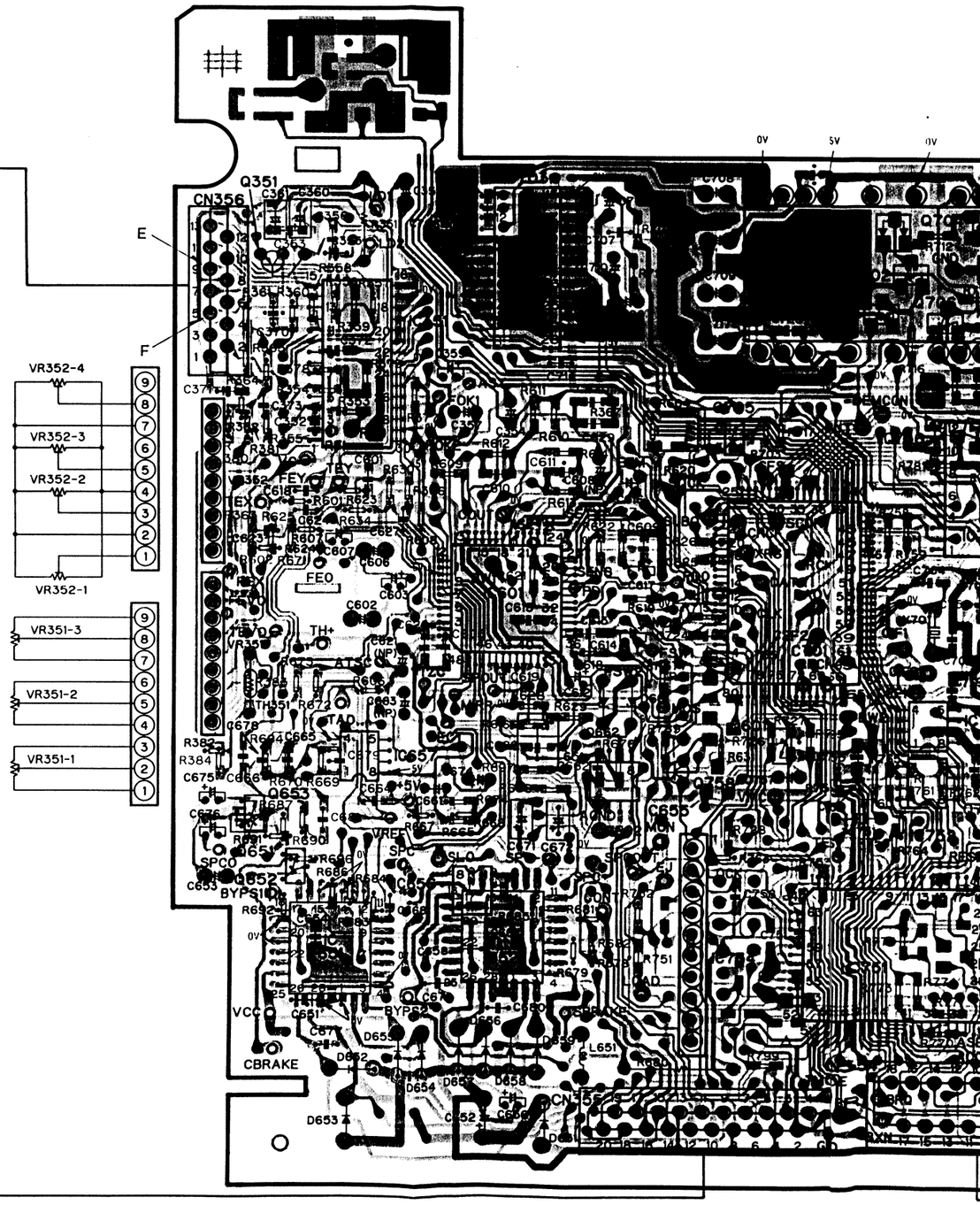

Q706 Q756 Q703
IC751 Q702 IC753 Q704 Q757 Q752
IC704 Q701 IC752 IC702 Q753 Q751

http://www.manualscenter.com

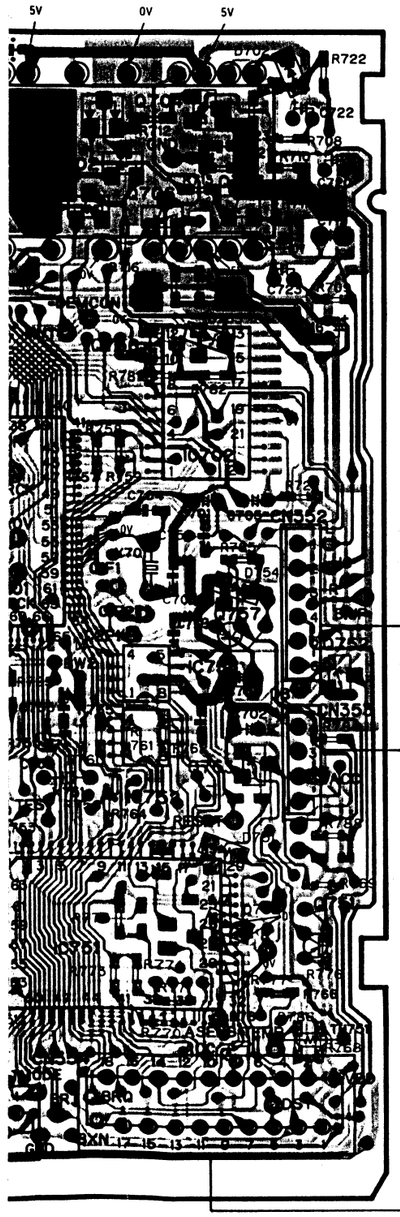

POWER SUPPLY UNIT
(Serial No.00501 –)

IC, Q Q951 IC951

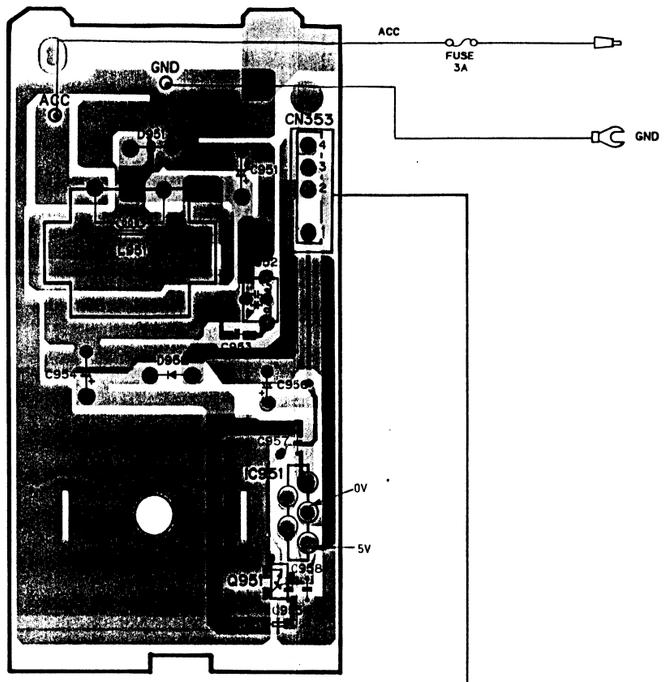

POWER SUPPLY UNIT
(Serial No.00001 – 00500)

IC, Q Q951 IC951

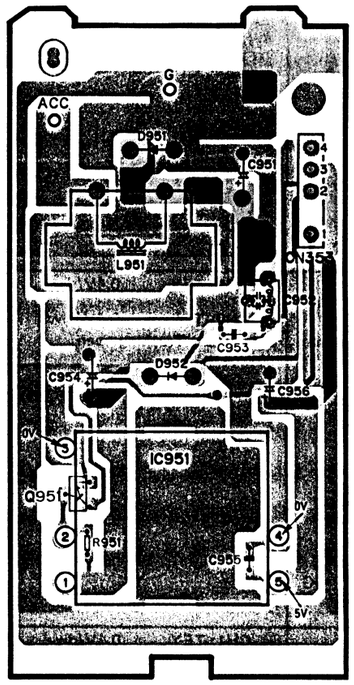

DISPLAY UNIT

IC, Q Q904 IC901 Q903 Q902 Q901

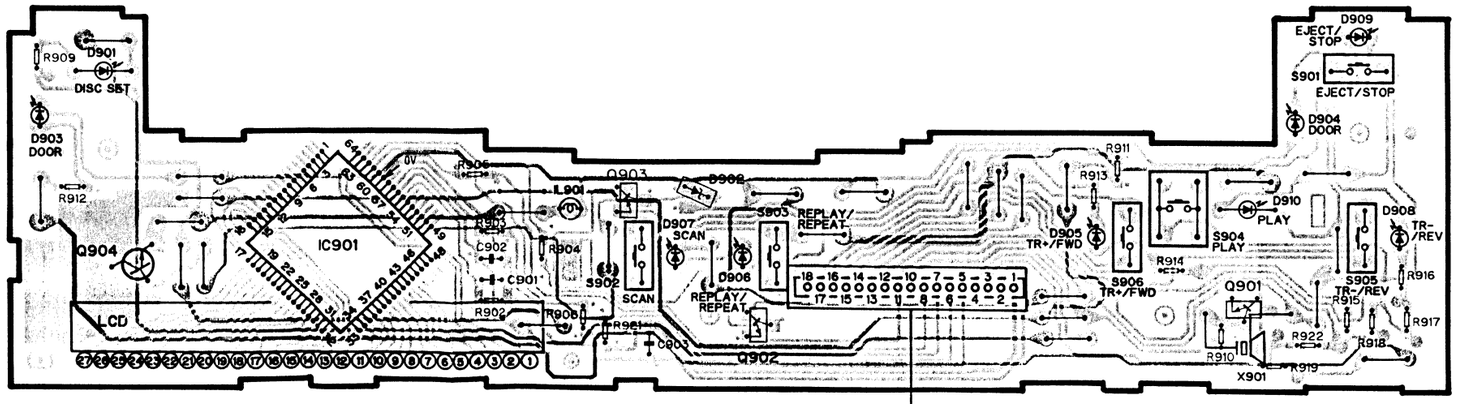

Fig. 50

• Chassis

http://www.manualscenter.com

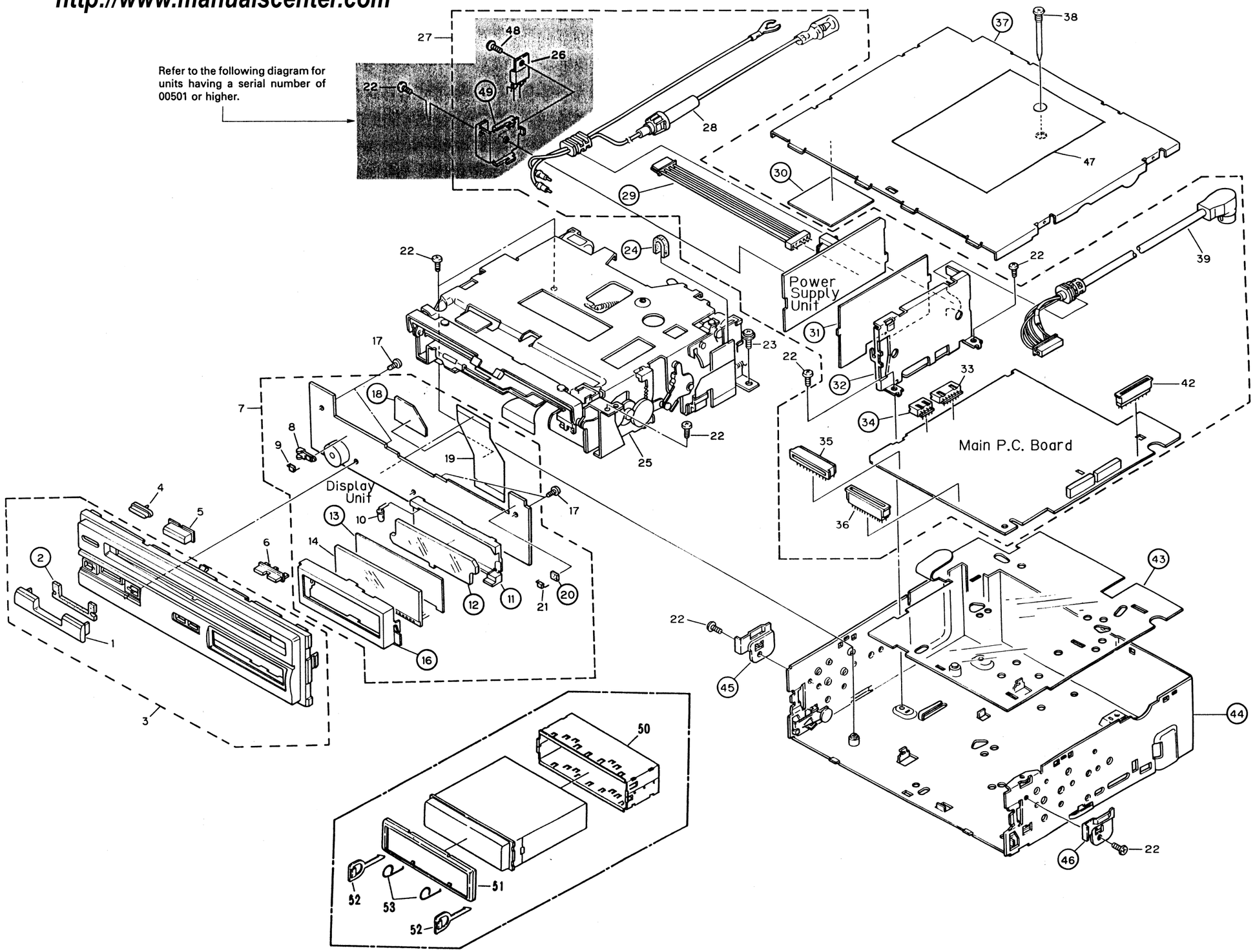

Fig. 51

11. CD MECHANISM UNIT EXPLODED VIEW

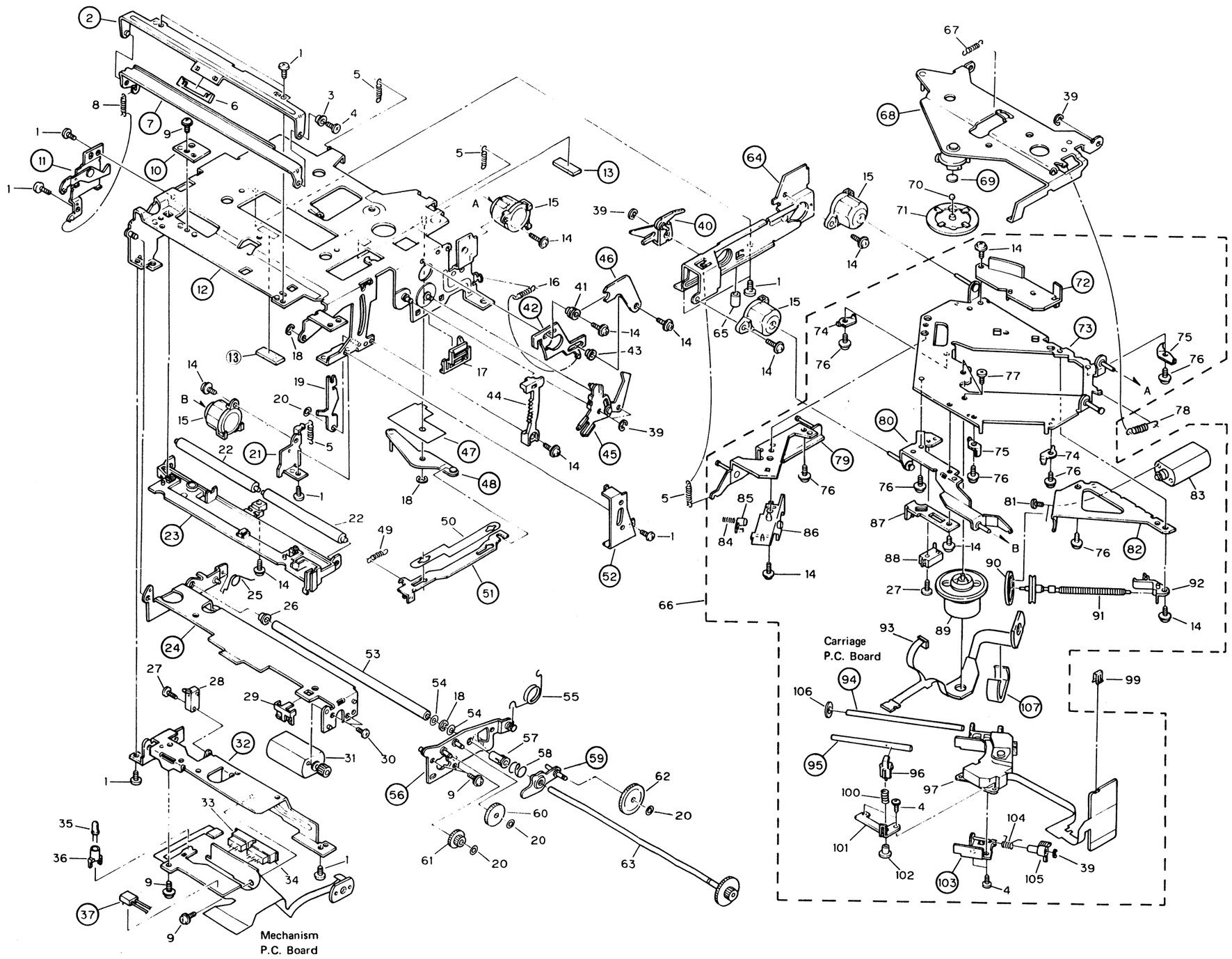

Fig. 52

Pin No.	Pin Name	I/O	Function and Operation
73	V_{DD}	–	Power supply (+5V)
74	DA12	Output	RAOV output
75	DA13	Output	C4LR output
76	DA14	Output	$\overline{\text{C21O}}$ output
77	DA15	Output	C21O output
78	DA16	Output	DATA output
79	WDCK	Output	Strobe signal output (176.4kHz)
80	LRCK	Output	Strobe signal output (88.2kHz)

Note:

C1F1: ┐ C1 decoding error correction status monitor output
C1F2: ┘

C2F1: ┐ C2 decoding error correction status monitor output
C2F2: ┘

C2FL: Corrected status output - "H" if C2 system currently being corrected cannot be corrected
C2PO: C2 pointer indication output - synchronized with audio data output
RFCK: Read frame clock output - crystal oscillator 7.35kHz
WFCK: Write frame clock output - f = 7.35kHz when crystal oscillator is locked
$\overline{\text{PLCK}}$: VCO/2 output - f = 4.3218MHz when EFM signal is locked
UGFS: Unprotected frame synchronizing pattern output
GTOP: Frame synchronization protection status indicator output
RAOV: ±4 frame jitter absorption RAM overflow and underflow indicator output
C4LR: Strobe signal - 176.4kHz
$\overline{\text{C21O}}$: C21O inverting output
C21O: Bit clock output - 2.1168MHz
DATA: Audio signal serial data output

*IC703: μPD6355G

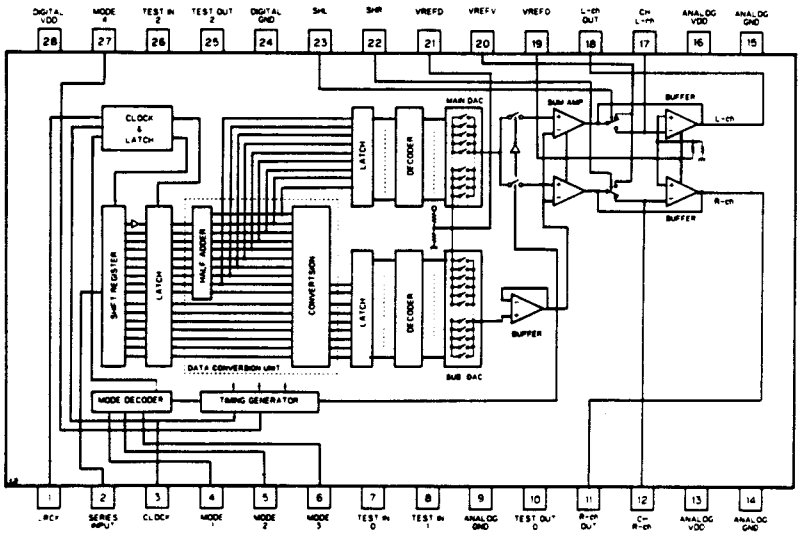

● Pin Functions (μPD6355G)

Pin No.	Pin Name	I/O	Function and Operation
1	LRCK	Input	Input data left/right discriminator signal input pin "L" = Left, "H" = Right
2	SI	Input	Serial data input pin
3	CLK	Input	Serial input data read clock input pin
4-6	M1-M3	Input	Input data mode selector pin

Pin No.	Pin Name	I/O	Function and Operation
7,8	TI_0, TI_1	Input	Test pins
9	A·GND		Analog stage ground pin
10	TOO	Output	Test pin
11	ROUT	Output	Right channel analog signal output pin
12	CHR	Output	Right channel analog signal sample hold capacitor pin
13	A·VDD		Analog stage power supply pin
14,15	A·GND		Analog stage ground pins
16	A·VDD		Analog stage power supply pin
17	CHL	Output	Left channel analog signal sample hold capacitor pin
18	LOUT	Output	Left channel analog signal output pin
19	VREFO		Operation amplifier reference connection
20	VREFV		Connection to AGND via capacitor
21	VREFD		Connection to resistance ladder
22	SHR	Input	Right channel analog output sample hold timing signal Active high
23	SHL	Input	Left channel analog output sample hold timing signal Active high
24	D·GND		Logic stage ground pin
25	TO2	Output	Test pin
26	TI2	Input	Test pin
27	M4	Input	Internal logic clock selection which determines whether input from CLK pin is to be divided or not ''H'': No division, ''L'': Divide by 2
28	D·VDD		Logic stage power supply pin

*IC702 : CXK5816M-15L

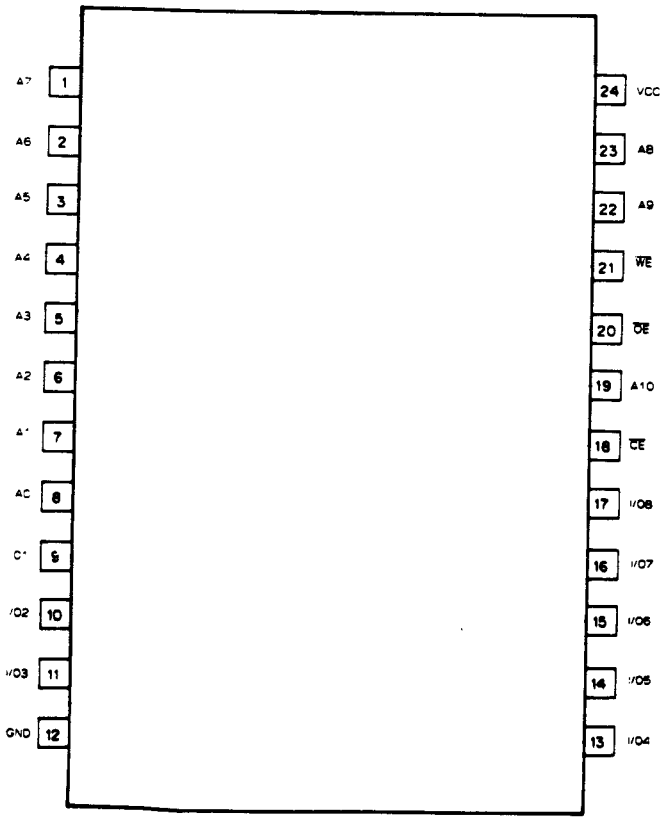

http://www.manualscenter.com

Circuit Diagram Symbols

Symbol	Function
A	1/4 division detector output used in detection of RF and focus signal
ACC	14.4V
AGND	Analog ground
ASY	Asymmetry
ATSC	Anti-shock (carriage motor control during playback)
B	1/4 division detector output used in detection of RF and focus signal
BATT	14.4V (Constant power supply)
BDATA	Bus data signal
BRST	Bus reset signal
BRXEN	Bus line busy signal
BSCK	Bus synchronizing shift clock
BSRQ	Bus service request line
BYPS1	Bypass 1 (non-drive enabled by connecting to ground during PWM IC651 operation)
BYPS2	Bypass 2 (non-drive enabled by connecting to ground during PWM IC652 operation)
C	1/4 division detector output used in detection of RF and focus signal
CBRAKE	PWM driver brake control signal (brake on when "L")
CLAMP	Disc set detect signal
CM +	Carriage motor drive signal (PWM OUT)
CM −	
CONT	PWM driver ON/OFF signal (ON when "H")
D	1/4 division detector output used in detection of RF and focus signal
DEEM	Emphasis selector switch (emphasis ON when "H")
DFCT	DEFECT signal ("H" when defect)
DGND	Digital ground
DISC	Disc presence detector signal
E	Tracking signal start detector
EFM	8-14 modulation
EJ	Eject key
END	Carriage mechanism END position detector signal
F	Tracking signal end detector
FA +	Focus actuator drive signal (PWM OUT)
FA −	
FAIN	Focus drive PWM input signal
FEO	Focus signal output (IC601, CXA1082AQ pin no.5)

Symbol	Function
FEO2	Focus 2 (IC655 pin no.1)
FLOAT	Carriage mechanism play position detector signal
HOME	Home position detector signal (pick-up at home position when "L")
IN1	Motor control signal 1
IN2	Motor control signal 2
IN3	Motor control signal 3
ISETY	ISET resistance pin (IC601 pin no.31)
LAMP	Photo-interrupter drive signal
LD	Laser diode
LOAD	Disc loading power supply ON/OFF signal
MON	Motor ON (spindle forward or reverse when "H")
MD	Monitor diode
$\overline{\text{MUTG}}$	Mute signal (muting ON when "L")
POWER	Power supply control signal
REG5	+ 5V
SLO	Carriage output signal (IC601 pin no.14)
SM +	Spindle motor drive signals (PWM OUT)
SM −	
SPC	Spindle motor rpm detector signal (low speed when "L", IC656 pin nos.1 & 7)
SPCO	Spindle brake (spindle brake when "H", IC751 pin no. 59)
SPDLO	Spindle motor error signal (IC601 pin no.39)
SPTAO	Tracking side path signal output
SMIN	Spindle motor drive PWM input signal
STBY	Standby position detector signal
TA +	Tracking actuator drive signals (PWM OUT)
TA −	
TAIN	Tracking actuator drive PWM input signal
TEND	Mechanism clamped switching line
TGU	Tracking side path input
TIG	Switch ground
TOG	Switch ground
TZC	T.E zero-cross signal
VC	Signal reference voltage (2.5V)
VREF	Signal reference voltage buffer output (2.5V)

●LCD : CWW1119

● SEGMENT

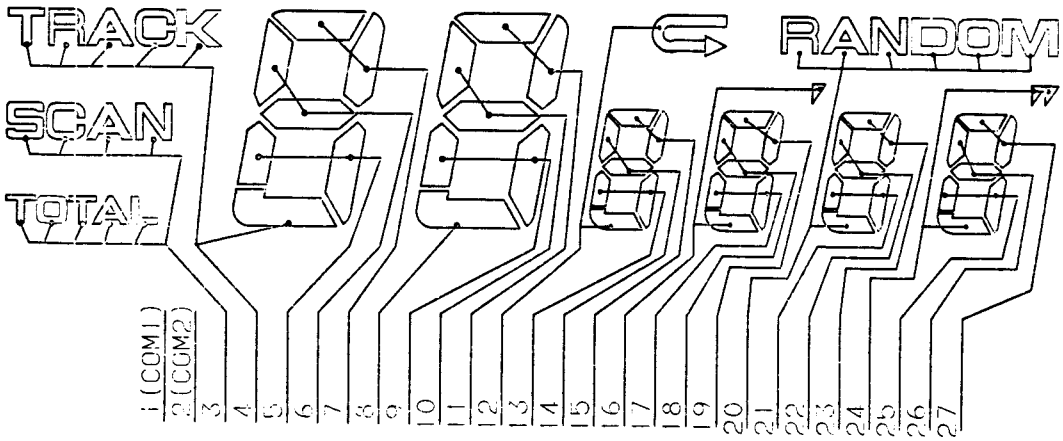

● COMMON

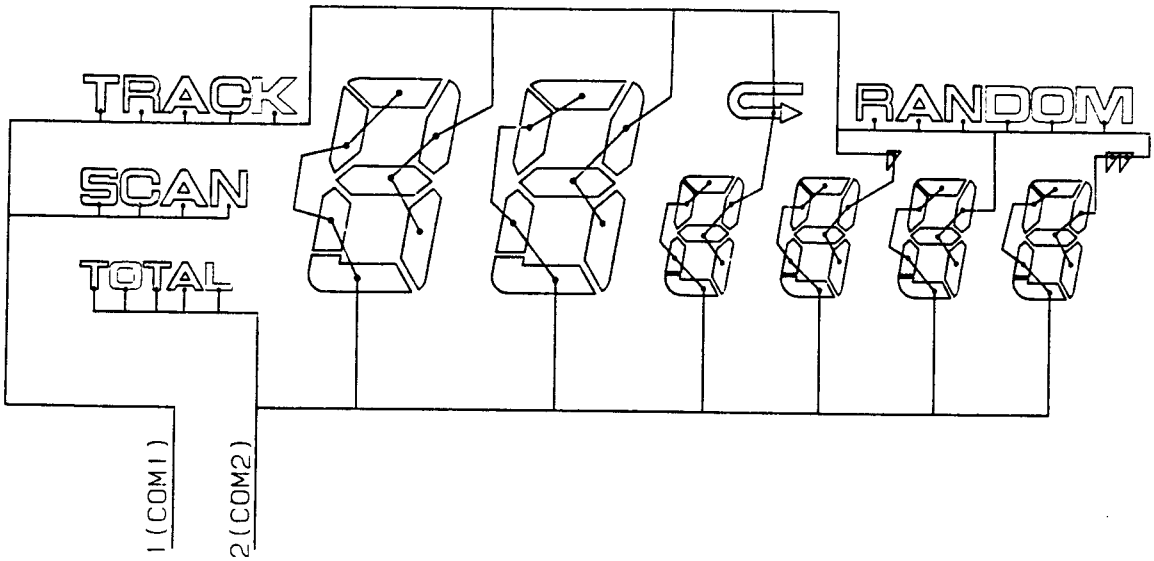

⑨ CH1: TEY 0.5V/div.
⑪ CH2: TAO 0.5V/div.
20ms/div.
Normal mode: PLAY

⑰ MDS 2V/div. 50μs/div.
PLAY

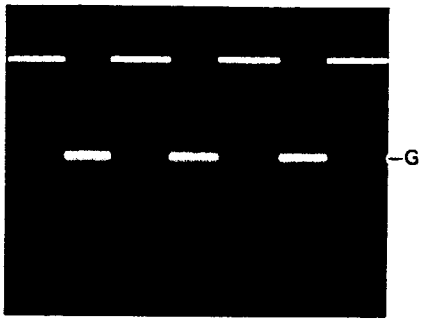

⑲ GFS 2V/div. 200μs/div.
PLAY

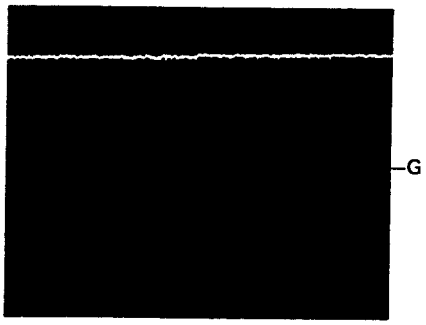

⑮ SPDLO 2V/div. 50ms/div.
PLAY

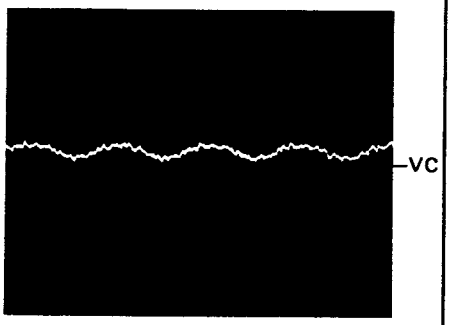

⑰ MDS 2V/div. 50μs/div.
SEARCH

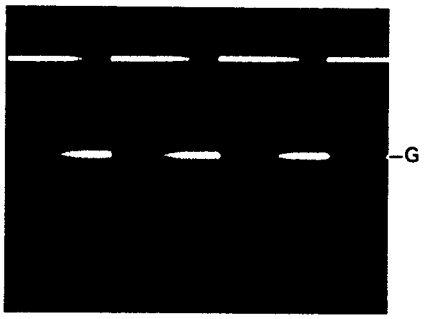

⑲ GFS 2V/div. 20ms/div.
SEARCH

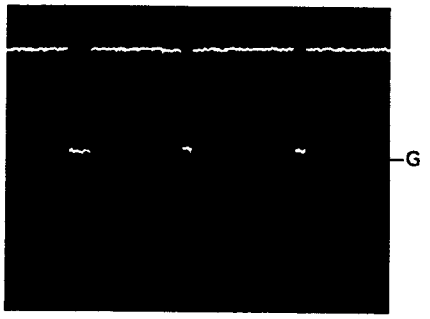

⑮ SPDLO 2V/div. 50ms/div.
SEARCH

⑱ MDP 2V/div. 200μs/div.
PLAY

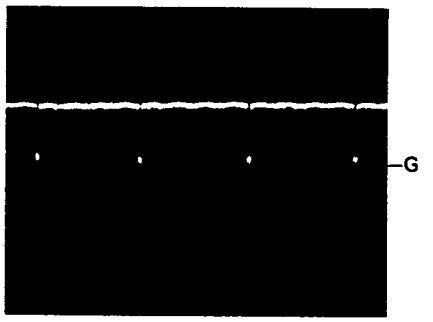

⑳ VCOO 2V/div. 0.2μs/div.
PLAY

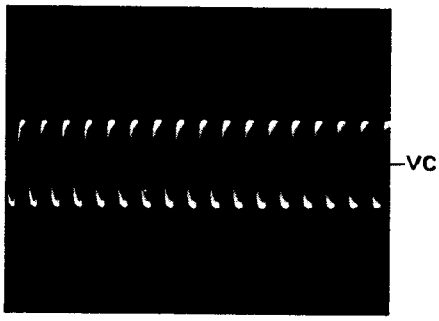

⑯ EFM 2V/div. 0.5μs/div.
PLAY

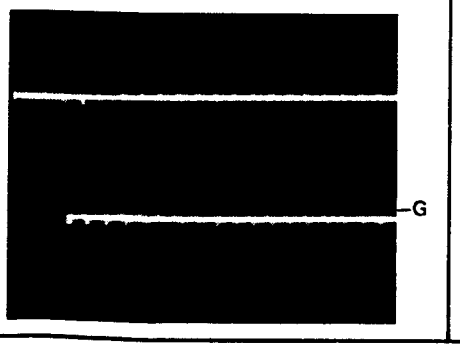

⑱ MDP 2V/div. 10ms/div.
SEARCH

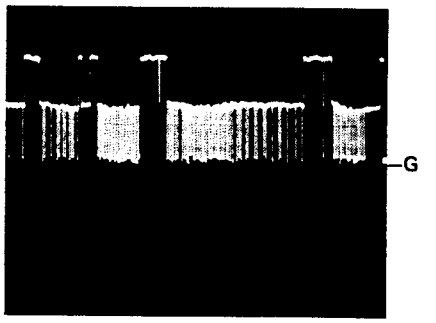

㉑ PLCK 2V/div. 0.2μs/div.
PLAY

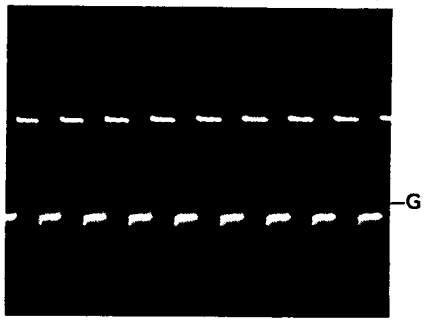

Note: 1. The encircled numbers denote measuring points in the circuit diagram.
2. Reference voltage.
G: GND VC: Pin 14 of CXA1081M (2.5V)

• Wave Forms

① CH1: RFO 0.4V/div.
② CH2: MIRR 2V/div. 0.4ms/div.
Test mode: Tracking open

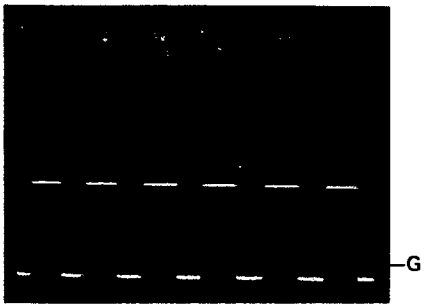

⑦ CH1: FEY 1V/div.
⑧ CH2: SENS 2V/div. 4ms/div.
Normal mode: Focus close (The lens moves DOWN → UP)

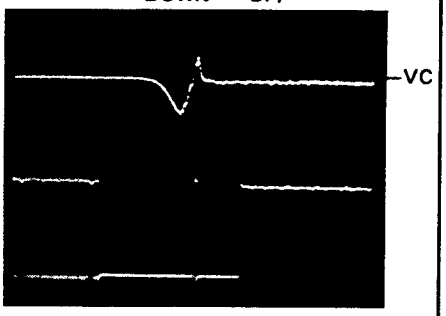

⑨ CH1: TEY 0.4V/div.
⑪ CH2: TAO 0.4V/div. 4ms/div.
Normal mode: Track search (80 track jump)

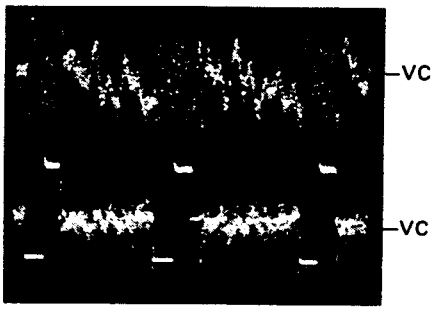

① CH1: RFO 1V/div.
③ CH2: DEFECT 2V/div. 0.4ms/div.
Normal mode: The defect part passes 800μm.

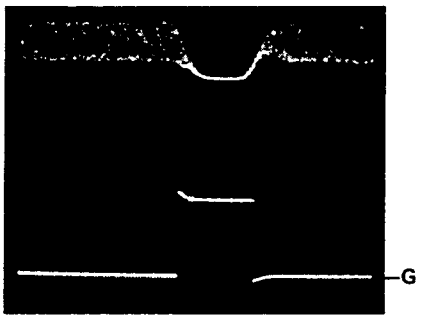

⑨ CH1: TEY 0.4V/div.
⑩ CH2: TZC 0.4V/div. 0.4ms/div.
Test mode: Tracking open

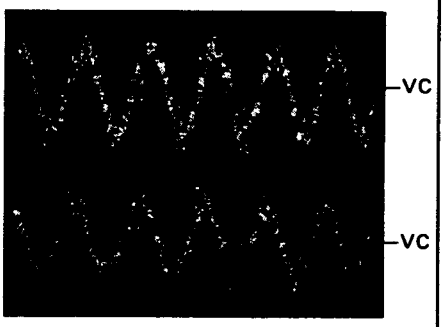

⑫ CH1: SLO 0.4V/div.
⑬ CH2: ATSC 0.02V/div. 2S/div.
Normal mode: PLAY

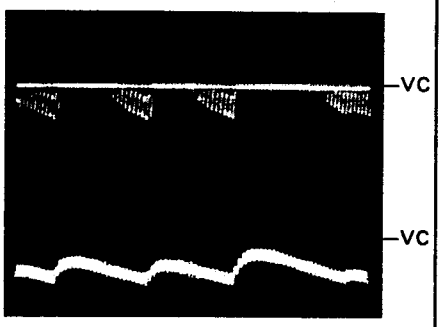

④ CH1: FEO 0.2V/div.
⑤ CH2: Pin 7 of CXA1082AQ 0.04V/div. 0.4S/div.
Test mode: Connect the FOK2 to GND. Focus search is performed. (CH2 is the same phase as the lens movement.)

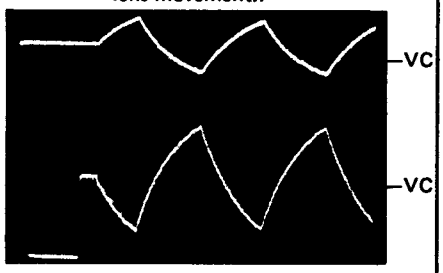

⑨ CH1: TEY 0.4V/div.
⑪ CH2: TAO 0.4V/div. 2ms/div.
Normal mode: Brake wave form when track search is performed.

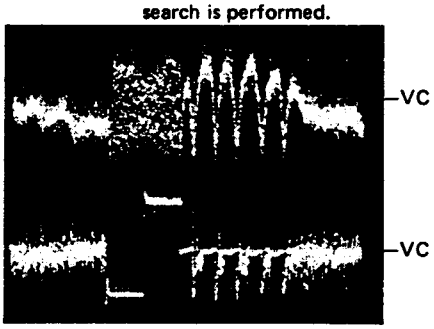

① RFO 0.5V/div. 200ns/div.
Normal mode: PLAY

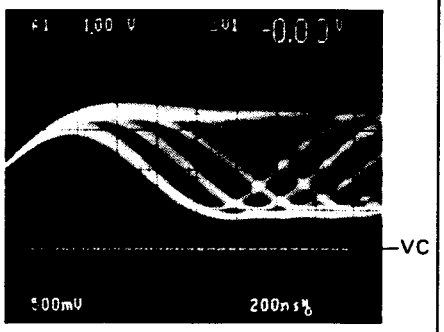

⑥ CH1: FOK2 2V/div.
④ CH2: FEO 0.2V/div. 0.2S/div.
Normal mode: Focus close

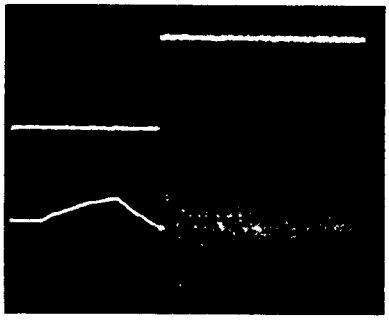

⑨ CH1: TEY 0.4V/div.
⑪ CH2: TAO 0.4V/div. 0.4ms/div.
Test mode: Single jump

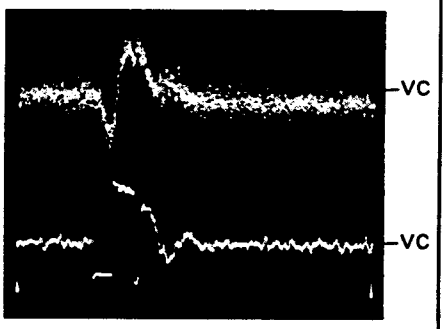

⑦ CH1: FEY 0.5V/div.
⑭ CH2: FEO2 0.5V/div. 20ms/div.
Normal mode: PLAY

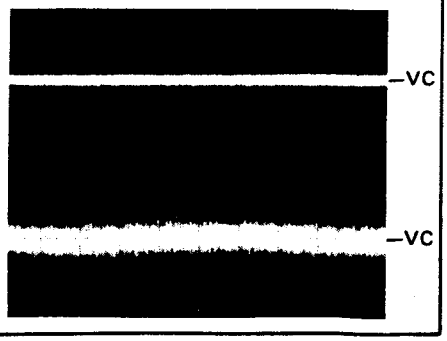

http://www.manualscenter.com

10. CHASSIS EXPLODED VIEW

NOTE:

- *For your Parts Stock Control, the fast moving items are indicated with the marks ★★ and ★.*
  ★★: GENERALLY MOVES FASTER THAN ★.
  This classification shall be adjusted by each distributor because it depends on model number, temperature, humidity, etc.
- *Parts whose parts numbers are omitted are subject to being not supplied.*
- *Parts marked by "◉" are not always kept in stock. Their delivery time may be longer than usual or they may be unavailable.*

● Parts List

Mark	No.	Part No.	Description
★	1	CAC1543	Button(UC)
		CAC1784	Button(EW)
	2		Cushion
	3	CXA2520	Grille Unit(UC)
		CXA2521	Grille Unit(EW)
★	4	CAC1439	Button
★	5	CAC1541	Button(UC)
		CAC1785	Button(EW)
★	6	CAC1542	Button
◉	7	CWX1160	Display Unit
	8	CNV1610	Spacer
★	9	LN41C	LED
★★	10	CEL1089	Lamp
	11		Holder
	12		Lens
	13		Plate
	14	CWW1119	LCD
	15	CNC2301	Contact
	16		Holder
	17	BPZ20P060FMC	Screw
	18		Spacer
	19	CNP1593	P.C.Board
	20		Spacer
★	21	LN81RC5V	LED
	22	BMZ26P040FMC	Screw
	23	PMF26P060FMC	Screw
	24		Cushion
◉	25	CXK2200	CD Mechanism Unit
		(CXK2240)	
★★	26	L780S05-LR	IC

Mark	No.	Part No.	Description
◉	27	CWX1159	Main Unit(UC)
		CWX1161	Main Unit(EW)
★	28	CDE2254	Cord(UC)
		CDE2255	Cord(EW)
	29		Connector
	30		Insulator
	31		Insulator
	32		Holder
	33	CKS-470	Plug
	34		Plug
	35	CKS1087	Connector
	36	CKS1415	Connector
	37		Case
	38	CBA1094	Screw
	39	CDE2133	DIN Cord
	40	.....	
	41	.....	
	42	CKS1328	Connector
	43		Insulator
	44		Chassis Unit
	45		Bracket
	46		Bracket
	47	CRP1031	Caution Card
	48	BMZ30P050FMC	Screw
	49		Bracket
	50	CNC1484	Holder
	51	CNS1403	Panel
	52	CNC1631	Handle
	53	CBH-865	Spring

㉒ BCLK 2V/div.
0.2μs/div.

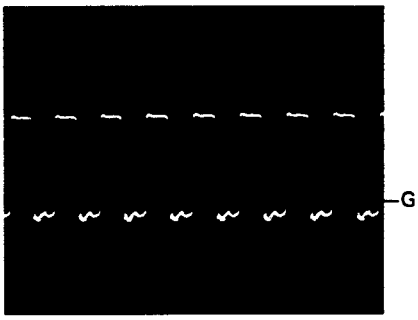

㉕ L or R L.P.F. 0.5V/div.
0.2ms/div.
PLAY (1kHz: FS)

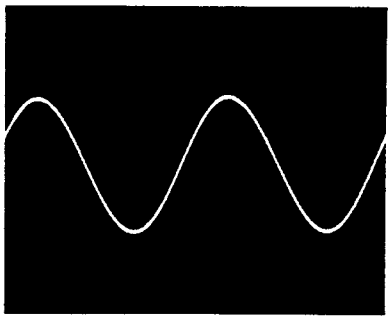

㉖ DATA 2V/div.
0.2μs/div.

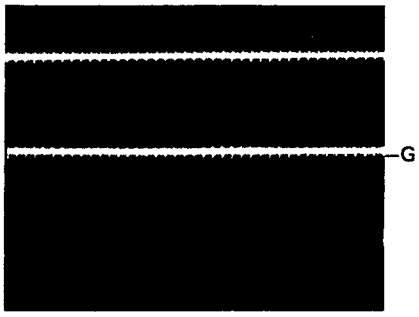

㉓ LRCK 2V/div.
5μs/div.
PLAY

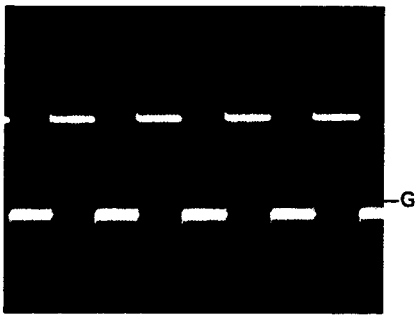

㉔ L or R OUT 0.5V/div.
0.2ms/div.
PLAY (1kHz: FS)

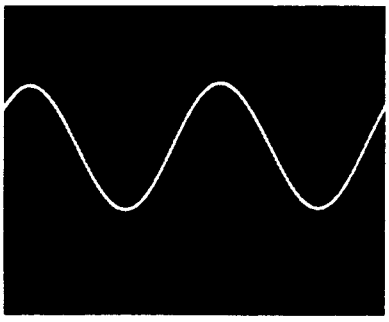

Mark	No.	Part No.	Description
	91	CXA2375	Screw Unit
	92	CNV1781	Holder
	93	CNP1709	P.C.Board
	94		Shaft
	95		Shaft
	96	CNV1512	Holder
	97	*******	PU Unit
	98	.....	
	99	CBL1010	Short Pin
	100	CBH1105	Spring
	101	CNC1736	Holder
	102	CLA1319	Screw
	103		Holder Unit
	104	CBH1106	Spring
	105	CNV1513	Rack
	106	CNV1863	Cushion
	107		Cover

****

Mark	No.	CD Mechanism Unit		Description
		CXK2200	CXK2240	
◉	66	CXA1910	CXA2650	Carriage Unit
	97	CGY1007	CGY1008	PU Unit

http://www.manualscenter.com

● **Parts List**

Mark	No.	Part No.	Description
	1	BMZ26P030FMC	Screw
	2		Bracket
	3	CLA1311	Collar
	4	CBA1062	Screw
	5	CBH1182	Spring
	6	CNV1641	Holder
	7		Arm
	8	CBH1137	Spring
	9	CBA1076	Screw
	10		P.C.Board
	11		Bracket Unit
	12		Chassis Unit
	13		Cushion
	14	CBA1075	Screw
	15	CXA2148	Damper Unit
	16	CBH1139	Spring
	17	CNV1633	Holder
	18	YE20FUC	Washer
	19	CNV1631	Cam
	20	CBF-166	Washer
	21		Bracket
	22	CNV1636	Roller
	23		Guide
	24		Arm Unit
	25	CBH1135	Spring
	26	CNV1884	Bearing
	27	CBA1070	Screw
★★	28	CSN1009	Switch(Disc Set)
	29	CNV1644	Holder
	30	HBA-175	Screw
★★	31	CXA2129	Motor Unit(Loading)
	32		Bracket
	33	CKS-719	Connector
	34	CKS-721	Connector
★	35	SLH-34VC3F	LED
	36	CNV1639	Holder
	37		Connector
	38	CNP1711	P.C.Board
	39	YE15FUC	Washer
	40		Arm Unit
	41	CLA1472	Collar
	42		Lever
	43	CLA1309	Collar
	44	CNV1630	Gear
	45		Arm Unit

Mark	No.	Part No.	Description
	46		Holder
	47		Spacer
	48		Arm Unit
	49	CBH1134	Spring
	50	CNM2152	Spacer
	51		Lever Unit
	52		Bracket
	53	CNV1634	Roller
	54	CBF1002	Washer
	55	CBH1133	Spring
	56		Bracket Unit
	57	CNV1632	Bearing
	58	CBH1181	Spring
	59		Arm Unit
	60	CNV1628	Gear
	61	CNV1627	Gear
	62	CNV1629	Gear
	63	CXA2456	Gear Unit
	64		Bracket Unit
	65	CNY-265	Cushion
◉	66	*******	Carriage Unit
	67	CBH1136	Spring
	68		Arm Unit
	69		Spacer
	70	CNR1079	Ball
	71	CNV1643	Clamper
	72		Guide
	73		Chassis Unit
	74	CNC1738	Holder
	75	CNC1739	Holder
	76	PMS20P030FMC	Screw
	77	HBA-163	Screw
	78	CBH1138	Spring
	79		Bracket Unit
	80		Holder Unit
	81	CBA-098	Screw
	82		Bracket
★★	83	CXA2133	Motor Unit(Carriage)
	84	CBH1104	Spring
	85	CNV1844	Spacer
	86	CNV1780	Holder
	87	CNV1674	Holder
★★	88	CSN-094	Switch(Home)
★★	89	CXM1033	Motor Unit(Spindle)
★★	90	CNT1020	Belt

12. ELECTRICAL PARTS LIST

NOTE:

- *For your parts Stock Control, the fast moving items are indicated with the marks ‡‡ and ‡.*
  ‡‡ : GENERALLY MOVES FASTER THAN ‡.
  This classification shall be adjusted by each distributor because it depends on model number, temperature, humidity, etc.
- *Parts whose parts numbers are omitted are subject to being not supplied.*
- *The part numbers shown below indicate chip components.*
  Chip Resistor
  RS1/8S□□□J, RS1/10S□□□J
  Chip Capacitor (except for CQS.....)
  CKS....., CCS....., CSZS.....

Unit Number :
Unit Name : Main P.C.Board

MISCELLANEOUS

Mark	Circuit Symbol & No.	Part Name	Part No.
‡‡	IC 351		CXA1081M
‡‡	IC 601		CXA1082AQ
‡‡	IC 651 652		PA3023
‡‡	IC 655 657		M5218FP
‡‡	IC 656		M5233FP
‡‡	IC 701		CXD1135Q
‡‡	IC 702		CXK5816M
‡‡	IC 703		μPD6355G
‡‡	IC 704		KHA221A
‡‡	IC 751		PD4177
‡‡	IC 752		M51955AFP
‡‡	IC 753		M51945AFP
‡‡	IC 754		M54546AL
‡‡	Q 351 751		2SB822F
‡‡	Q 601 652 653 705	Chip Transistor	UN2211
‡‡	Q 651 701 752 753 756	Chip Transistor	UN2211
‡‡	Q 702 706	Chip Transistor	UN2111
‡‡	Q 703 704	Chip Transistor	2SD1048
‡‡	Q 757 758		2SD1226M
‡	D 651		ERA15-02
‡	D 652		ERA82-004Y
‡	D 653 654 655 656 657 658 659		ERA82-004VH
‡	D 661 662		HZS2ALL
‡	D 701	Chip Diode	MA151WA
‡	D 702 751 752	Chip Diode	MA151K
‡	D 753	Chip Diode	MA3200
‡	D 754	Chip Diode	MA3056
‡	D 755	Chip Diode	MA3062
	L 651	Choke Coil	CTH1035
	TH 351	Thermister	CCX1001
	TH 751	Thermister	CCX-021
	X 701	Crystal Resonator	CSS1027
	X 751	Ceramic Resonator	CSS-042
‡‡	VR 351	Semi-fixed 47kΩ(B), 10kΩ(B)×2	CCP1005
‡‡	VR 352	Semi-fixed 47kΩ(B)×4	CCP1006
‡‡	VR 604	Semi-fixed 2.2kΩ(B)	HCP-267
‡‡	VR 651	Semi-fixed 47kΩ(B)	HCP-275

RESISTORS

Mark	Circuit Symbol & No.	Part Name	Part No.
R	351		RS1/2P220JL
R	353 381 714		RS1/10S102J
R	354 363 378		RS1/10S223J
R	355 610 625		RS1/10S113J
R	356 357 358 359 669		RS1/10S563J
R	360 361		RS1/10S124J
R	362 763		RS1/10S564J
R	364 365 618 671		RS1/10S105J
R	366 377 666 769		RS1/10S562J
R	367		RS1/10S104J
R	379 722 723 757 758		RS1/10S472J
R	380 617 628 682		RS1/10S203J
R	382		RS1/10S363J
R	383		RS1/10S823J
R	384 630		RS1/10S273J
R	601 602		RS1/10S101J
R	606		RS1/10S224J
R	607 764		RS1/10S683J
R	608		RS1/10S823J
R	609 614 619 627 759 773 774		RS1/10S104J
R	611		RS1/10S432J
R	612		RS1/10S623J
R	613		RS1/10S624J
R	616		RS1/10S183J
R	620		RS1/10S332J
R	621		RS1/10S184J
R	622 670 687 696 697 715 718 719 751 752		RS1/10S103J
R	623 765		RS1/10S473J
R	624		RS1/10S393J
R	629		RS1/10S153J
R	631		RS1/10S272J
R	634		RS1/10S474J
R	665 789		RS1/10S821J
R	667 684 686 717		RS1/10S472J
R	668 679		RS1/10S392J
R	672		RS1/10S364J
R	673		RS1/10S473J
R	674 716		RS1/10S332J
R	676 799		RS1/10S201J
R	677		RS1/10S201J

Mark	Circuit Symbol & No.	Part Name	Part No.
	R 678		RS1/10S223J
	R 680		RS1P1R5JL
	R 681		RS1/10S203J
	R 683		RS1/10S101J
	R 685 692		RS1/10S105J
	R 690		RS1/10S272J
	R 691 703 755		RS1/10S103J
	R 694 786		RS1/10S822J
	R 701		RS1/10S100J
	R 708 709		RS1/10S242J
	R 710 711		RS1/10S152J
	R 712 713		RS1/10S392J
	R 721		RS1/10S4R7J
	R 724 725 726 727 728 777 784 788		RS1/10S0R0J
	R 753 756		RS1/10S681J
	R 760 761 762 770 771 785		RS1/10S222J
	R 766 767		RS1/10S681J
	R 768 775 776		RS1/10S103J
	R 781		RS1/10S303J
	R 782		RS1/10S154J

CAPACITORS

Mark	Circuit Symbol & No.	Part Name	Part No.
	C 351 720		CEA101M6R3LS
	C 352 611 625 626 662 664 713 721 724 727		CKSQYB103K50
	C 353 613 666		CKSYB333K25
	C 354 357		CASA330M6R3
	C 355 667 668 714		CKSQYB103K50
	C 356		CKSYB332K50
	C 359 614		CEAR47M50LS
	C 360 361		CSZS010M16
	C 370 703 704		CCSQCH220J50
	C 371 615		CKSQYB102K50
	C 372		CCSQCH100D50
	C 373 627		CCSQCH220J50
	C 601		CKSQYB222K50
	C 602 653 708 709		CEA100M25LS
	C 603 607 612 716		CEA100M6R3LS
	C 605 620 622 628 629		CKSYB473K25
	C 606		CEA220M16LS
	C 608		CEA220M6R3NPLL
	C 609 756		CKSQYB472K50
	C 610 619		CCSQCH221J50
	C 616		CEA220M6R3LS
	C 617		CEA4R7M16LS
	C 618		CKSQYB682K50
	C 621		CEA4R7M16NPLL
	C 623		CKSQYB272K50
	C 624		CCSQCH391J50
	C 651 670		CKSYF224Z25
	C 652	470μF/16V	CCH-114
	C 654 658		CCSQCH221J50
	C 656		CEA100M16LS
	C 661 663		CEA010M50NPLL
	C 665 678		CKSYB473K25
	C 671 672		CSZSR68M20
	C 674 705		CASA100M6R3
	C 675 676		CEA2R2M35LS

Mark	Circuit Symbol & No.	Part Name	Part No.
	C 677 679		CCSQSL681J50
	C 680		CCSQSL681J50
	C 681		CKSYB393K25
	C 701 710 712 726		CASA6R8M6R3
	C 702		CASA220M6R3
	C 706 707		CCSQCH470J50
	C 717 718		CEA470M6R3LS
	C 719		CEA101M6R3LS
	C 722 723		CEA330M6R3LS
	C 728 729 751 754 758 759		CKSQYB103K50
	C 752		CCSQCH300J50
	C 753		CCSQCH300J50
	C 755		CEA221M6R3LL
	C 757		CASA6R8M10

Unit Number :
Unit Name : Power Supply Unit (Serial No.00501～)

Mark	Circuit Symbol & No.	Part Name	Part No.
‡‡	IC 951	Regulator	L780S05-LR
‡‡	Q 951	Chip Transistor	UN2211
‡	D 951 952		ERA15-02VH
	L 951	Choke Coil	CTF-002
	R 951		RS1/10S103J
	C 951 954		CEA471M16L2
	C 952		CCG-105
	C 953 955		CKSQYF473Z50
	C 956		CEAUH221M10
	C 957		CKSYF334Z25
	C 958		CKSYF104Z25

Unit Number :
Unit Name : Power Supply Unit (Serial No.00001～00500)

Mark	Circuit Symbol & No.	Part Name	Part No.
‡‡	IC 951	D/D Converter	KHA1001B
‡‡	Q 951	Chip Transistor	UN2211
‡	D 951 952		ERA15-02VH
	L 951	Choke Coil	CTF-002
	R 951		RS1/10S103J
	C 951 954		CEA471M16L2
	C 952		CCG-105
	C 953 955		CKSQYF473Z50
	C 956		CEAUH221M10

Unit Number :
Unit Name : Display Unit

MISCELLANEOUS

Mark	Circuit Symbol & No.	Part Name	Part No.
‡‡	IC 901		LC7582P
‡‡	Q 901 902	Chip Transistor	UN2211
‡‡	Q 903	Chip Transistor	UN2111
‡‡	Q 904	Chip Transistor	2SD1760F5
‡	D 901	LED	LN81RC5V
‡	D 902	Chip Diode	MA3091
‡	D 903 904 905 906 907 908 909		AY5724K
‡	D 910	LED(PLAY)	LN41C
	X 901	Buzzer	CPV1005
‡‡	S 901 902 903 905 906	Switch	CSG1021

Mark	Circuit Symbol & No.	Part Name	Part No.
##	S 904	Switch(PLAY)	CSG1018
##	IL 901	Lamp	CEL1089
		LCD	CWW1119

RESISTORS

Mark	Circuit Symbol & No.	Part Name	Part No.
	R 902		RS1/10S104J
	R 903 904 905 906		RS1/10S102J
	R 909		RS1/10S681J
	R 910		RS1/10S222J
	R 911		RS1/10S821J
	R 912 919 922		RS1/10S201J
	R 913 914 915 916 917 918		RS1/10S151J
	R 921		RS1/10S103J

CAPACITORS

Mark	Circuit Symbol & No.	Part Name	Part No.
	C 901		CCSCH301J50
	C 902 903		CKSYB103K50

Unit Number :
Unit Name : Carriage P.C.Board

Mark	Circuit Symbol & No.	Part Name	Part No.
##	M 831	Motor Unit(Spindle)	CXM1033
##	M 832	Motor Unit(Carriage)	CXA2133
##	S 831	Switch(Home)	CSN-094

Unit Number :
Unit Name : Mechanism P.C.Board

Mark	Circuit Symbol & No.	Part Name	Part No.
##	Q 831	Photo-transistor	PH102-F
#	D 831	LED(DISC Detect)	SLH-34VC3F
##	M 833	Motor Unit(Loading)	CXA2129
##	S 832	Switch(DISC Set)	CSN1009

Miscellaneous Parts List

Mark	Circuit Symbol & No.	Part Name	Part No.
		PU Unit	CGY1007 (CGY1008)

http://www.manualscenter.com

13. PACKING METHOD

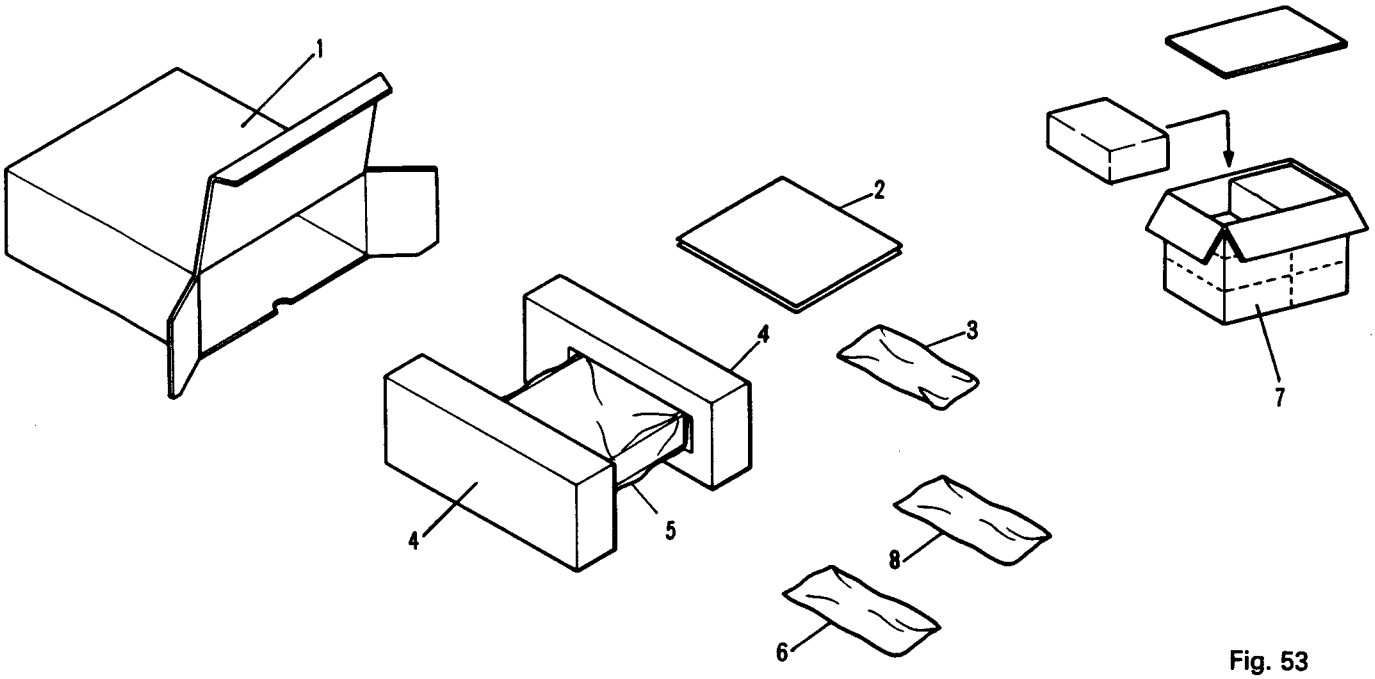

Fig. 53

● Parts List

Mark	No.	Part No.	Description
	1	CHG1534	Carton(UC)
		CHG1533	Carton(EW)
	2	CRD1238	Owner's Manual(UC)
		CRD1237	Owner's Manual(EW)
		CRD1255	Installation Manual(EW)
			Caution Card
			Card
	3	CEA1401	Accessory Assy(UC)
		CEA1421	Accessory Assy(EW)
	3 1	CBH-865	Spring
	3 2	CNC1631	Handle
	3-3	CNF-111	Strap
	3-4		Spacer Unit
	3-5	CNV1917	Bush
	3-6		Screw Assy

Mark	No.	Part No.	Description
	3-6-1	BMZ30P050FMC	Screw(×2)(UC)
	3-6-2	BMZ40P080FMC	Screw(×4)(UC)
	3-6-3	BMZ50P080FMC	Screw(×4)(UC)
	3-6-4	HMF40P080FUC	Screw(×1)(UC)
	3-6-5	CBA-102	Screw(×1)
	3-6-6	CBA1002	Screw(×1)
	3-6-7	NF50FMC	Nut(×2)
	3-7		Screw Assy(EW)
	3-7-1	CBA-102	Screw(×4)(EW)
	3-7-2	HMF40P080FUC	Screw(×1)(EW)
	3-7-3	HMF40P080FZK	Screw(×4)(EW)
	3-7-4	NF50FMC	Nut(×4)(EW)
	4	CHP1186	Styrofoam
	5	CEG-162	Polyethylene Bag
	6	CNS1403	Panel
	7	CHL1534	Contain Box(UC)
	8	CNB1159	Mounting Bracket(EW)

PIONEER®
The future of sound and vision.

Service Manual

SERVICE GUIDE
ORDER NO.
CRT 1161

CD MECHANISM UNIT

CX-173

- This service manual is a description of the CD mechanism found in the model numbers listed in the table below.
- When performing repairs use this manual together with the specific manual for the model under repair.

Model	Service Manual
DEH-66/UC	CRT1166
DEH-66SDK/WG	
DEH-66/EW	
DEH-66/EI	

PIONEER ELECTRONIC CORPORATION 4-1, Meguro 1-Chome, Meguro-ku, Tokyo 153, Japan
PIONEER ELECTRONICS SERVICE INC. P.O. Box 1760, Long Beach, California 90801 U.S.A.
PIONEER ELECTRONICS OF CANADA, INC. 505 Cochrane Drive, Markham, Ontario L3R 8E3 Canada
PIONEER ELECTRONIC [EUROPE] N.V. Keetberglaan 1, 2740 Beveren, Belgium
PIONEER ELECTRONICS AUSTRALIA PTY. LTD. 178-184 Boundary Road, Braeside, Victoria 3195, Australia TEL: [03] 580-9911

FK © JUNE 1988 Printed in Japan

http://www.manualscenter.com

1. DISASSEMBLY

- **Disassembly of the Carriage Unit**

Note: There may be times when the names of parts used in this manual are not the same as those used in the lists accompanying the Exploded View. If a different name is used here, the part name given in the Exploded View is also provided in parentheses ( ).

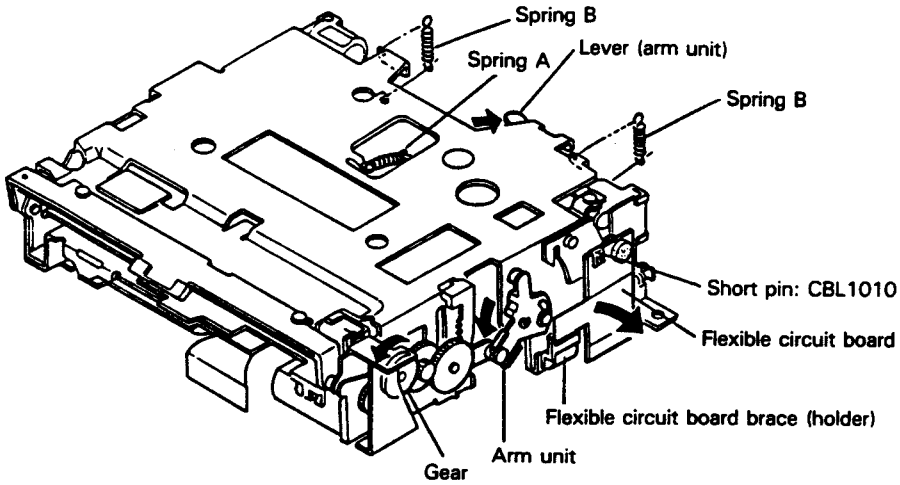

Fig. 1

1. Put the mechanism unit into a loading complete state. (Move the lever back and rotate the gear while pressing down lightly on the arm unit. Rotate the gear until the three carriage unit shafts are free and the unit is supported by the four damper units.
2. Remove Spring A and two Springs B.
3. Remove the flexible circuit board from the flexible circuit board brace.

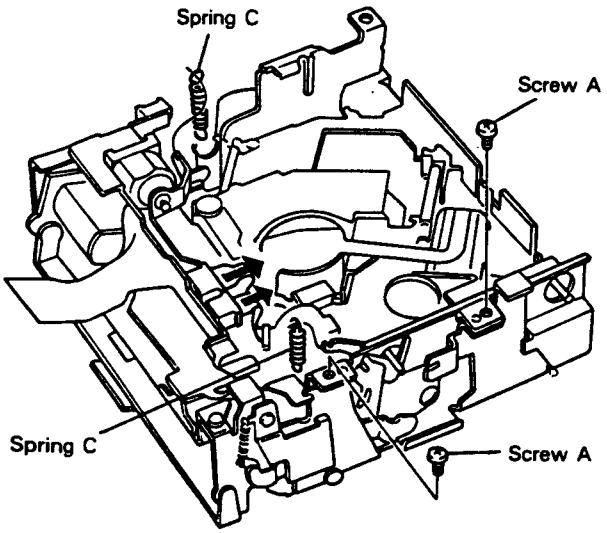

Fig. 2

4. Turn the mechanism unit upside down.
5. Remove the two Springs C.
6. Remove the two flexible circuit boards from their connectors.
7. Remove the two Screws A.

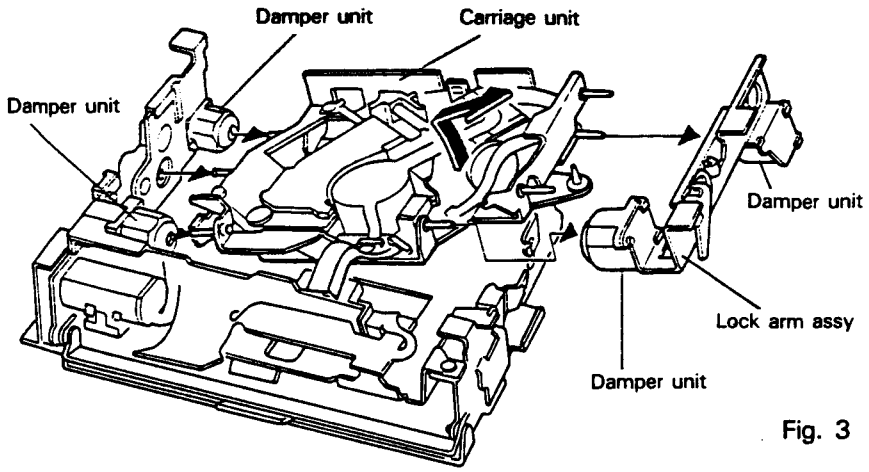

Fig. 3

8. Lift the lock arm assembly and then pull out the carriage unit.
9. Remove the carriage unit from the lock arm assembly.
   Note: The damper units are lined with a thin rubber film. Be careful not to damage this when disassembling.

• Disassembly of the Carriage Motor Unit

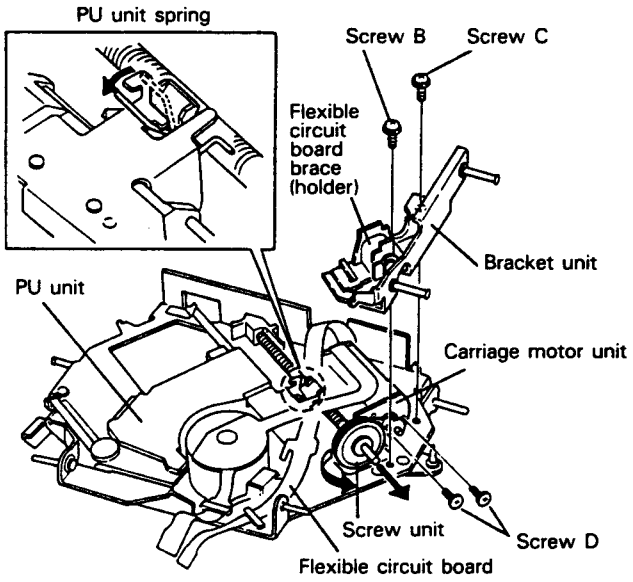

Fig. 4

1. After removing the Screw B and Screw C, remove the bracket unit. At this time remove the flexible circuit board from the flexible circuit board brace.
2. Remove the belt.
3. Cock the PU unit spring as shown in Fig. 4 and then move the PU unit to its outermost position.
   (Cocking the spring disengages the screw unit so that the PU unit can be moved by hand from above.)
4. Pull the screw unit out of the assembly.
5. Remove the two Screws D and then the carriage motor unit.
   Note: When reinstalling the carriage motor unit, tighten Screw D and seal it.

http://www.manualscenter.com

• Disassembly of the PU Unit

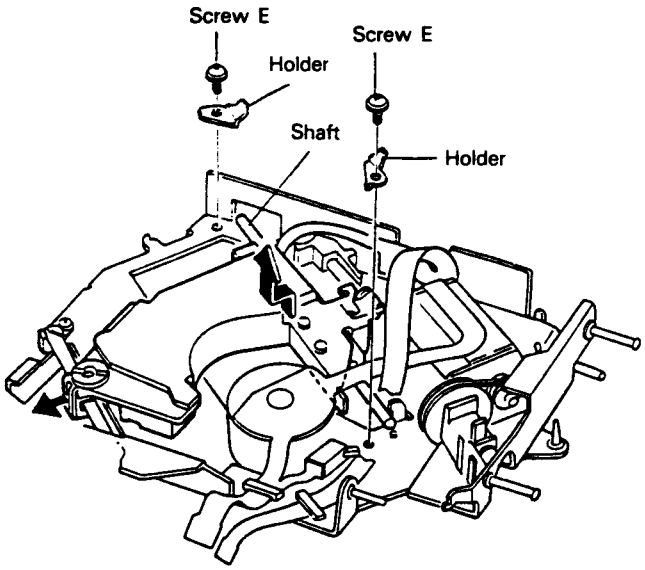

Fig. 5

1. Cock the PU unit spring as shown in Fig. 4. Move the PU unit to the center of the shaft for easy removal.
2. Remove the two Screws E and then the holders.
3. Remove the PU unit, lifting it from the shaft side where the holders have been removed and being careful not to catch the shaft on the opposite side.
4. Pull the shaft out of the PU unit.

• Disassembly of the Spindle Motor Unit

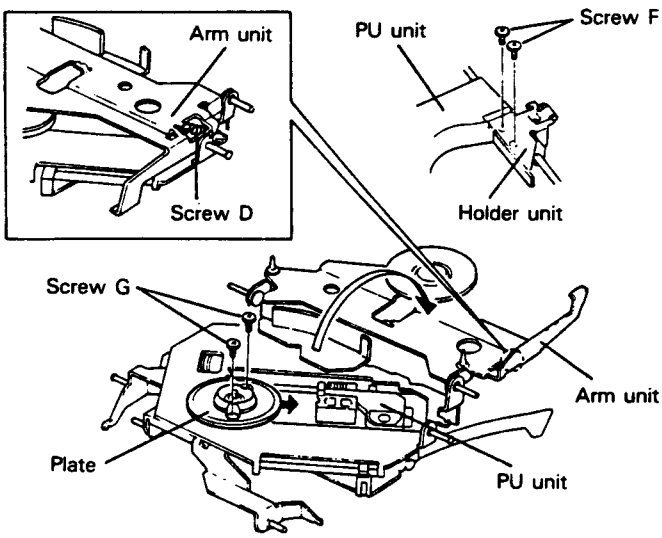

Fig. 6

1. Remove the two Screws F and then remove the holder unit from the PU unit.
2. Cock the PU unit spring as shown in Fig. 4 and move the PU unit to its outermost position.
3. Turn the whole carriage unit right side up.
4. Remove Screw D and turn the arm unit upside down.
5. Turn the spindle motor plate so that the holes on the plate are at the position of the screws underneath.
6. Remove the two Screws G.
   Note: When reinstalling the spindle motor unit, tighten the Screws G and seal them.
7. Slide the spindle motor unit onto its side and remove it.

• Disassembly of the Loading Motor Unit

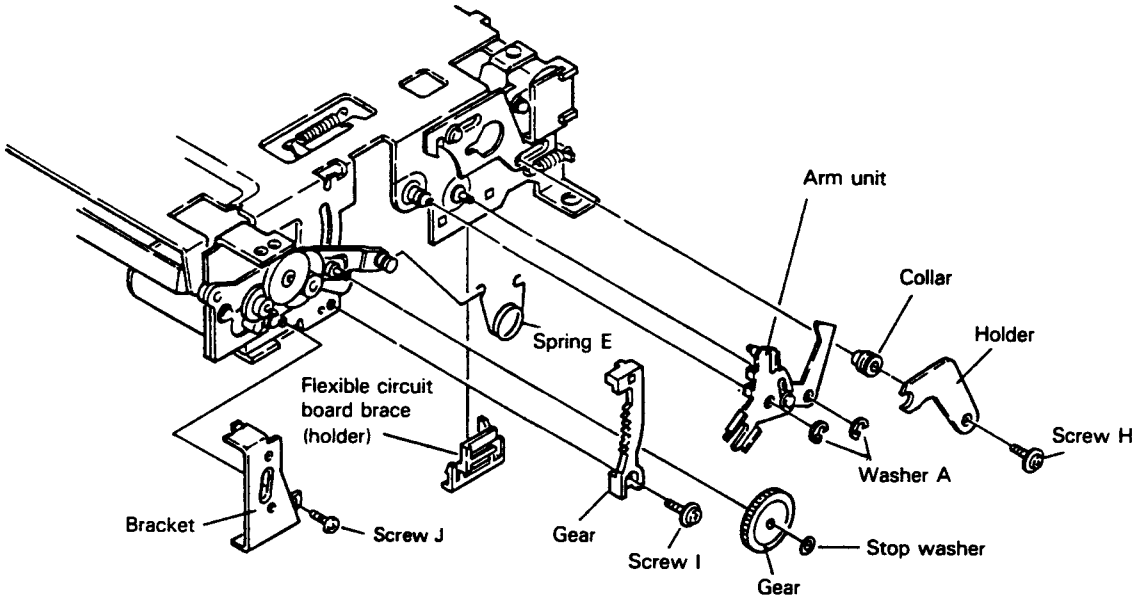

Fig. 7

1. Remove the carriage unit.
   (Refer to the previous section entitled, "Disassembly of the Carriage Unit.")
2. Remove the flexible circuit board brace.
3. Remove Screw H and then the holder.
   Note: When Screw H is removed, the collar will also come free. Be sure not to lose it.
4. Remove the Screw E.
5. Remove the two Washers A and then the arm unit.
6. Remove the stop washer and then the gear.
7. Remove Screw I and then the gear.
8. Remove Screw J and then the bracket.

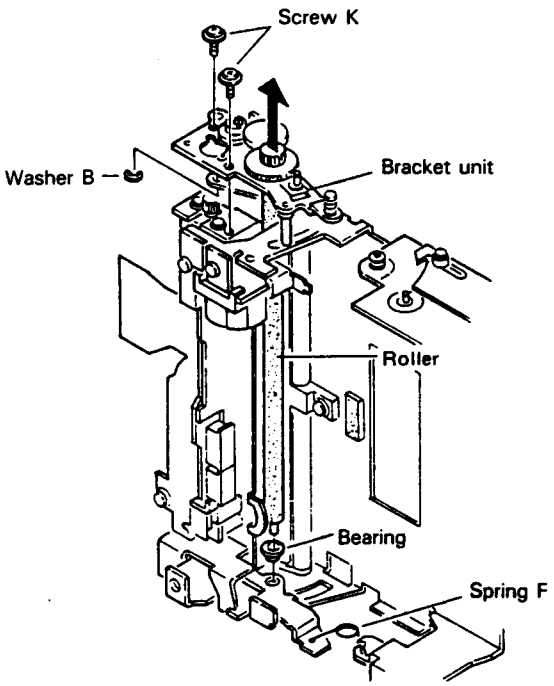

Fig. 8

9. Remove Spring F.
10. Remove washer B.
11. Remove the two Screws K and then pull out the bracket unit.
    Note: The bearing at the tip of the roller will also come loose. Be careful not to lose it.

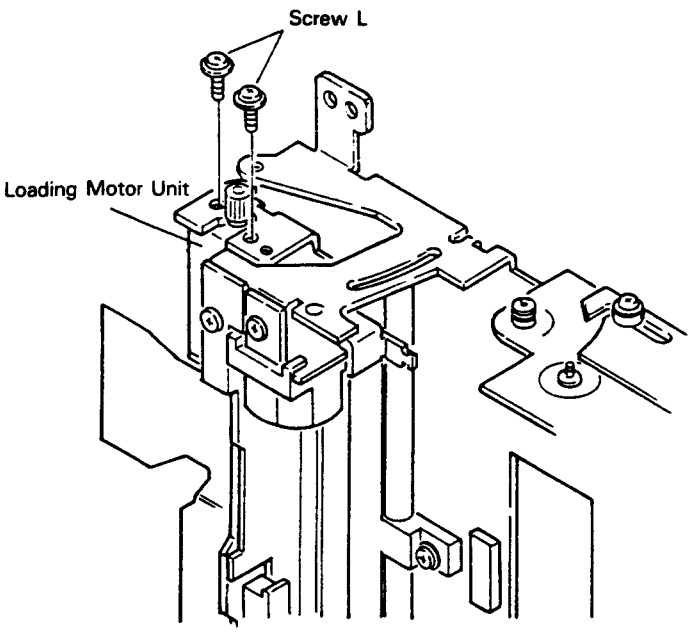

12. Remove the two Screws L and then the loading motor unit.

Fig. 9

2. MECHANISM DESCRIPTION

- **Loading Operation**

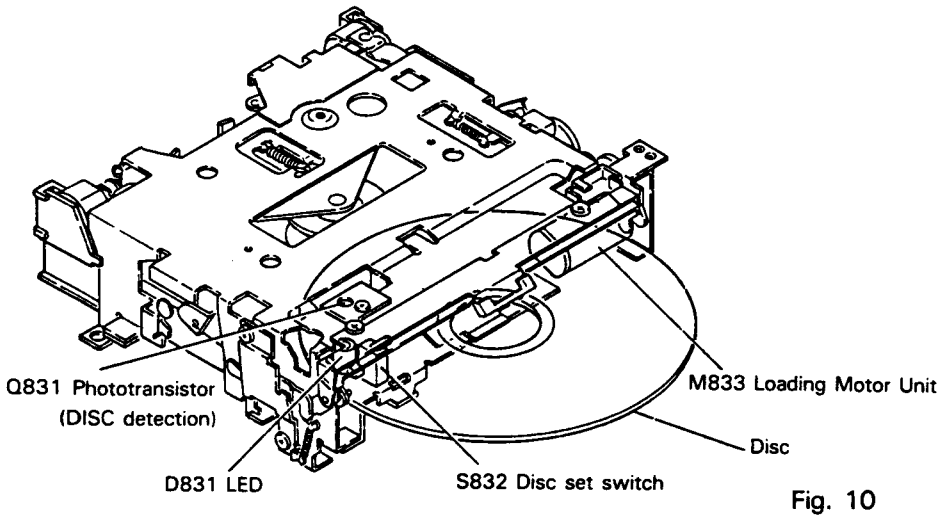

Fig. 10

1. When a disc is inserted into the unit, it enters between the LED and the phototransistor with the result that the light from the LED to the phototransistor is blocked.
2. When the phototransistor detects a disc presence in the unit, the loading motor begins to rotate and loading begins.
3. When the loading motor rotates, the roller is turned and the disc is moved into the unit. (Fig. 11)

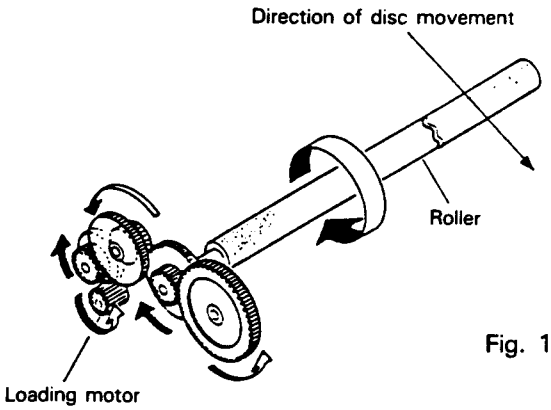

Fig. 11

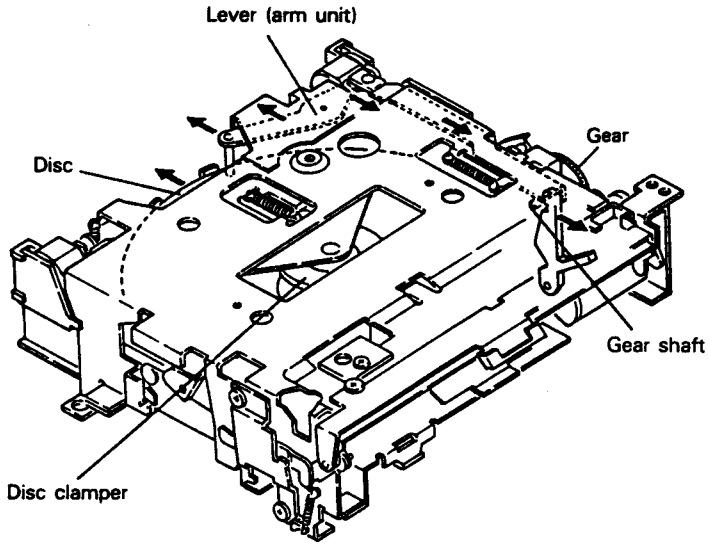

Fig. 12

4. When the disc pushes on the lever, the gear shaft lock is released. The gear meshes with another internal toothed gear and is lowered. (See Figs. 12, 13)
5. The action of the gear shaft moving down lowers the disc clamp and the disc is held in place.
6. As the gear is lowered when it meshes with the internal toothed gear, the gear unit also is lowered and the disc set switch pressed.
7. At the same time, the disc door is lowered and the disc insert door is blocked to prevent the introduction of another disc.
   The three shafts of the carriage unit are in a free mode and the carriage unit is in an anti-vibration mode supported by the four damper units. (Fig. 14)
   When the disc set switch is turned on, loading motor rotation stops and the loading operation is complete.

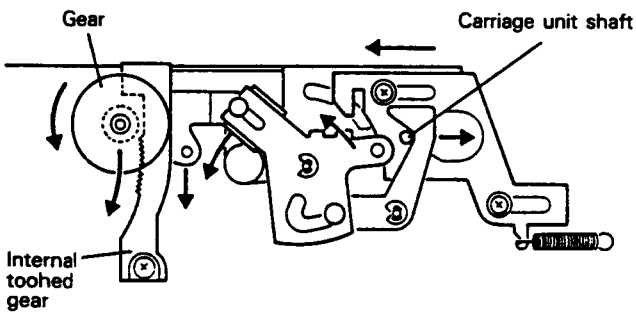

Fig. 13

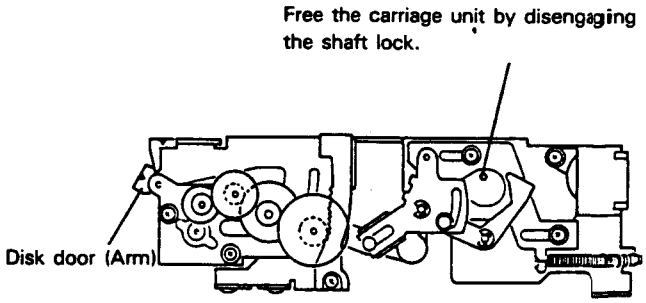

Fig. 14

http://www.manualscenter.com

(view of reverse side)

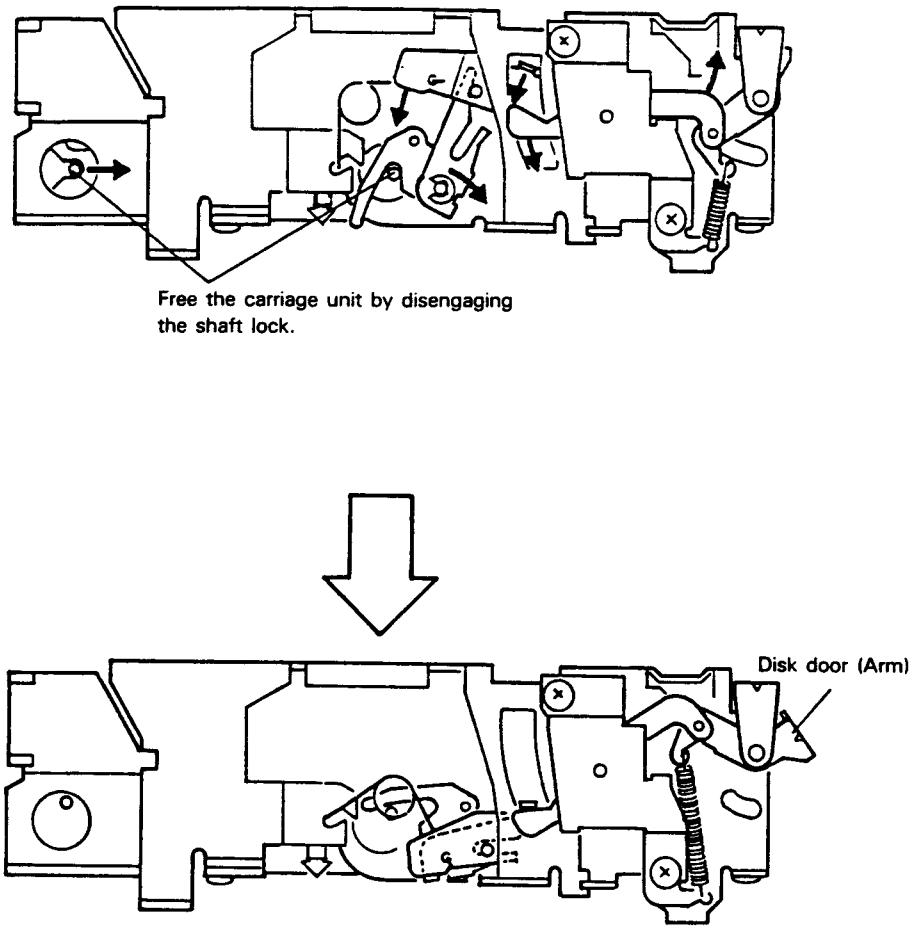

Fig. 15

http://www.manualscenter.com