JVC

SERVICE MANUAL

COMPACT DISC AUTOMATIC CHANGER

KD-MK77 A/B/C/E/G/GE/GI/J/U

COMPACT disc DIGITAL AUDIO

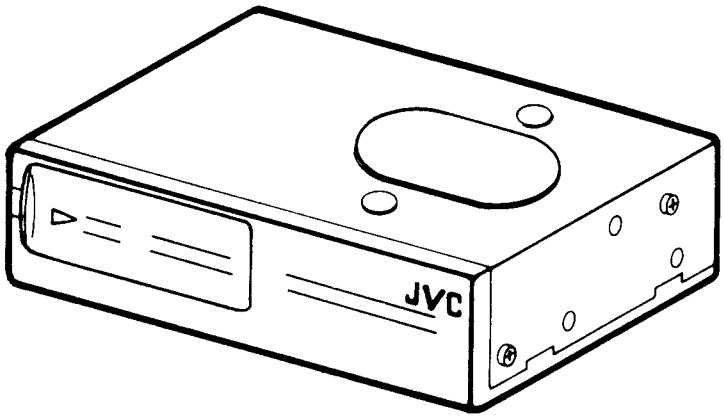

Area Suffix	
A	Australia
B	U.K.
C	Canada
E	Continental Europe
G	Germany
GE	Eastern Europe Austria and Switzland
GI	Italy
J	U.S.A.
U	other areas

www.manualscenter.com

Content

■ Safety Precaution 2
■ Instructions 3
1 Location of main parts 13
2 Removal of main parts
■ External case sections 15
■ Mechnism sections 16
■ Note when assembly 18
3 Main adjustment 21
4 Troubleshooting chart of CD player section 24
5 Description of pin function 30
6 Blook diagram 33
7 Wiring connections 33
8 Standard schematic diagram 34
9 Location of p.c.board parts 36
10 Exploded view of enclosure component 41
11 Exploded view of mechnism component parts 42
12 Packing illustration and parts list 45

COPYRIGHT © 1996 VICTOR COMPANY OF JAPAN. LTD.

■Safety Precautions

J (USA) Only
Important for Laser Products

1. CLASS 1 LASER PRODUCT
2. DANGER: Invisible laser radiation when open and interlock failed or defeated. Avoid direct exposure to beam.
3. CAUTION: Do not open the bottom cover. There are no user serviceable parts inside the unit; leave all servicing to qualified service personnel.
4. CAUTION: The compact disc player uses invisible laser radiation and is equipped with safety switches which prevent emission of radiation when unloading cartridge and the safety interlocks have failed or are defeated. It is dangerous to defeat the safety switches.
5. CAUTION: Use of controls of adjustments or performance of procedures other than those specified herein may result in hazardous radiation exposure.
6. CAUTION: The laser is able to function, if safety switches are out of function. The laser light is invisible, avoid exposure, do not disassemble the laser unit, but replace the complete unit.

B/E/G Only
Important for Laser Products

1. CLASS 1 LASER PRODUCT
2. DANGER: Invisible laser radiation when open and interlock failed or defeated. Avoid direct exposure to beam.
3. CAUTION: Do not open the bottom cover. There are no user serviceable parts inside the unit; leave all servicing to qualified service personnel.
4. CAUTION: The compact disc player uses invisible laser radiation and is equipped with safety switches which prevent emission of radiation when unloading cartridge and the safety interlocks have failed or are defeated. It is dangerous to defeat the safety switches.
5. CAUTION: Use of controls of adjustments or performance of procedures other than those specified herein may result in hazardous radiation exposure.

ADVERSEL: Usynlig laserstråling ved åbning. når sikkerhedsafbrydere er ude af funktion. Undgå udsættelse for stråling.

VAROITUS: Varmuuskytkimen oliessa pois päältä kun laite avataan, siellä kehittyy näkymätöbtä lasersäteilä. Älä pane itseäsi säteilyn altiiksi.

VARNING: Osynlig laserståining uppstår vid komponentens öppning när säkerhetsbrytaren är frånslagen.

ADVARSEL: Usynling laserstråling ved åpning når sikkerhetsbryteren er ude af funktion Unngå utsettelse for stråling.

Identification And Certification Labels

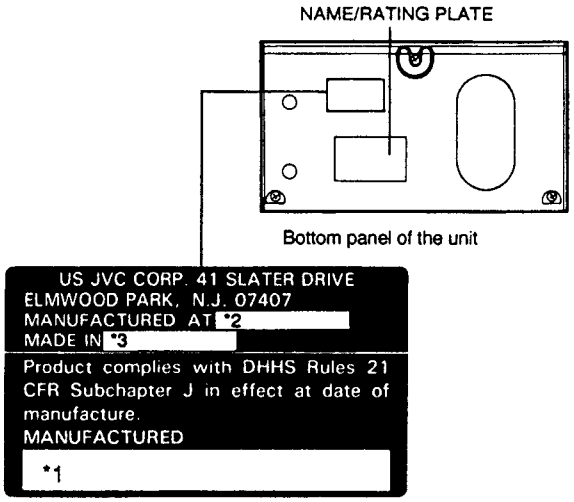

Notes
*1 The date of manufacture.
*2 The ID code of manufacturing plant.
*3 Marking of country origin.

Position And Reproduction Of Labels

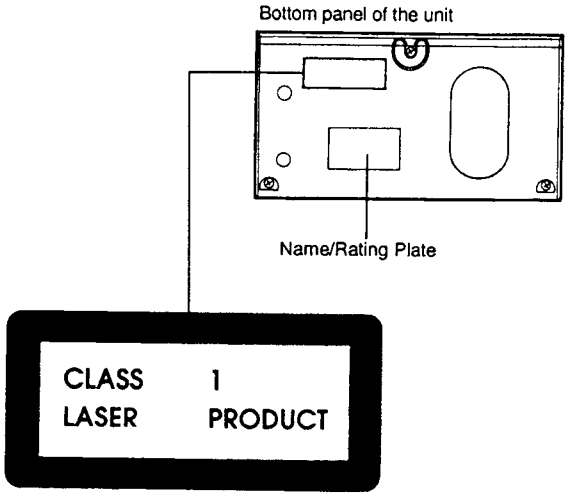

Obs:
Apparaten innehåller laserkomponent av högre laserklass än klass 1.

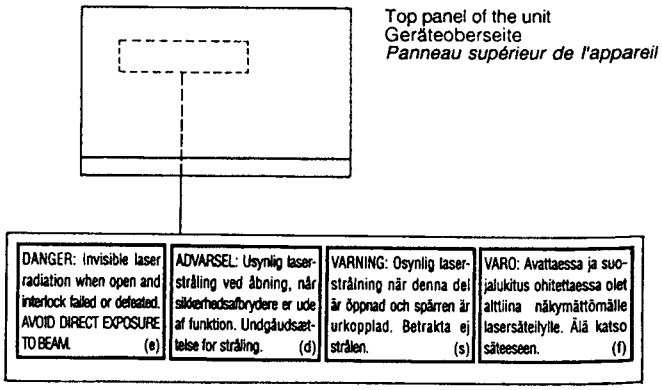

www.manualscenter.com

■ Instructions

JVC

COMPACT DISC AUTOMATIC CHANGER

CAMBIADOR AUTOMATICO DE DISCOS COMPACTOS
CHANGEUR AUTOMATIQUE DE DISQUE AUDIONUMERIQUE

KD-MK77 A/C/J/U

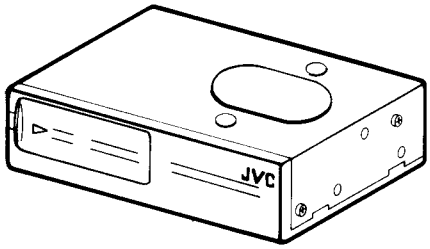

COMPACT disc DIGITAL AUDIO

For Customer Use:
Enter below the Model No. and Serial No. which are located on the top or bottom of the cabinet. Retain this information for future reference.

Model No. _____

Serial No. _____

INSTRUCTIONS

MANUAL DE INSTRUCCIONES
MANUEL D'INSTRUCTIONS

KD-MK77A/C/J/U
COMPACT DISC AUTOMATIC CHANGER

SPECIFICATIONS

CD CHANGER SECTION
Frequency response: 5 – 20,000 Hz
Dynamic range: 93 dB
S/N ratio: 96 dB
Distortion: 0.006 %
Wow & flutter: Less than measurable limit
Output terminal: Analog (8 pin x 1), 1.5 V (Full scale)/Less than 1 kΩ
GENERAL
Power requirement
Operating voltage: DC 14.4 V (11 V – 16 V Allowable)
Grounding system: Negative ground
Dimensions (W x H x D):
274 x 75 x 178 mm
(10-13/16" x 3" x 7-1/16")
Gross Weight: 3.6 kg (8.0 lbs)

Design and specifications subject to change without notice.

If a kit is necessary for your car, consult your telephone directory for the nearest car audio speciality shop.

ESPECIFICACIONES

SECCION DEL CAMBIADOR DE CD
Respuesta de frecuencia: 5 – 20.000 Hz
Gama dinámica: 93 dB
Relación S/R: 96 dB
Distorción: 0,006 %
Lloro y tremolación: Inferior al límite mesurable
Terminal de salida: Analógica (8 conectadores x 1), 1,5 V (escala total/Menos de 1 k ohmio
GENERALIDADES
Alimentación
Tensión de funcionamiento: 14,4 V CC (11 V – 16 V permisible)
Sistema de puesta a masa: Masa negativa
Dimensiones (An x Al x Pr): 274 x 75 x 178 mm
Peso bruto: 3,6 kg

El diseño y las especificaciones están sujetos a cambio sin aviso previo.

Si fuera necesario un juego de instalación para su automóvil, consulte la guía telefónica para ubicar la tienda especialista en audio para automóviles más cercana.

CARACTERISTIQUES TECHNIQUES

SECTION CHANGEUR DE DISQUE AUDIONUMERIQUE
Réponse en fréquence: 5 à 20.000 Hz
Gamme dynamique: 93 dB
Rapport signal/bruit: 96 dB
Distortion: 0,006 %
Pleurage et scintillement: Inférieur à la limite mesurable
Borne de sortie: Analogique (8 broches x 1), 1,5 V (pleine échelle)/inférieure à 1 kΩ
GENERALES
Alimentation
Tension de fonctionnement: CC 14,4 V (11 V à 16 V possible)
Système de mise à la masse: Masse négative
Dimensions (L x H x P): 274 x 75 x 178 mm
Poids brut: 3,6 kg

Présentation et caractéristiques modifiables sans préavis.

Si un kit est nécessaire pour votre voiture, consulter votre annuaire téléphonique pour chercher le revendeur d'accessoires audio pour automobile le plus proche.

JVC
VICTOR COMPANY OF JAPAN, LIMITED

© 1996 VICTOR COMPANY OF JAPAN, LIMITED

Printed in Singapore
VNN3694-631S

www.manualscenter.com

ENGLISH

Thank you for purchasing this JVC product. Please read these instructions carefully before starting operation to be sure to obtain optimum performance and a longer service life from the unit.

ESPAÑOL

Muchas gracias por haber comprado este producto de JVC. Tenga a bien leer detenidamente este manual de instrucciones antes de poner en funcionamiento la unidad a fin de obtener un rendimiento óptimo y mayor duración.

FRANÇAIS

Nous vous remercions d'avoir acheté cet appareil JVC. Veuillez lire consciencieusement ce manuel d'instructions avant de commencer à faire fonctionner l'appareil de façon à être sûr d'obtenir les performances optimales et la plus longue utilisation de cet appareil.

INFORMATION (For U.S.A.)

This equipment has been tested and found to comply with the limits for a Class B digital device, pursuant to Part 15 of the FCC Rules. These limits are designed to provide reasonable protection against harmful interference in a residential installation. This equipment generates, uses, and can radiate radio frequency energy and, if not installed and used in accordance with the instructions, may cause harmful interference to radio communications. However, there is no guarantee that interference will not occur in a particular installation.

If this equipment does cause harmful interference to radio or television reception, which can be determined by turning the equipment off and on, the user is encouraged to try to correct the interferenc by one or more of the following measures:
— Reorient or relocate the receiving antenna.
— Increase the separation between the equipment and receiver.
— Connect the equipment into an outlet on a circuit different from that to which the receiver is connected.
— Consult the dealer or an experienced radio/TV technician for help.

Area suffix
A ..... Australia
C ..... Canada
J ..... U.S.A.
U ..... Other areas

Sufijo de país
A ..... Australia
C ..... Canadá
J ..... EE.UU.
U ..... Otros países

Suffixe des zones
A .....Australie
C .....Canada
J.....Etats-Unis
U .....Autres pays

CONTENTS

Warning 4
Precautions 4
Installation 6
Electrical connections 11
Location of controls 13
Handling compact discs and magazines 14
Specifications ..... Back page

INDICE

Advertencia 4
Precauciones 4
Instalación 6
Conexiones eléctricas 11
Ubicación de los controles 13
Manipulación de compact disc y magazines 14
Especificaciones ..... Contratapa

SOMMAIRE

Avertissement 4
Précautions à observer 4
Mise en place 6
Raccordements électriques 11
Emplacement des commandes 13
Manipulation des disques audionumériques et des magasins 14
Caractéristiques techniques ..... Page de couverture

IMPORTANT FOR LASER PRODUCTS (For U.S.A. only)

Precautions

1. CLASS 1 LASER PRODUCT
2. **DANGER:** Invisible laser radiation when open and interlock failed or defeated. Avoid direct exposure to beam.
3. **CAUTION:** Do not open the top cover. There are no user-serviceable parts inside. Leave all servicing to qualified service personnel.
4. **CAUTION:** This CD player uses invisible laser radiation, however, is equipped with safety switches to prevent radiation emission when unloading CD magazine. It is dangerous to defeat the safety switches.
5. **CAUTION:** Use of controls, adjustments or performance of procedures other than those specified herein may result in hazardous radiation exposure.

Identification And Certification Labels

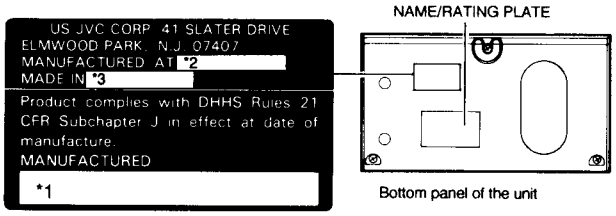

Notes
*1 The date of manufacture.
*2 The ID code of manufacturing plant.
*3 Marking of country origin.

Note:
For CD operations, refer to the instructions of the JVC CD Changer Controller, etc. **(applicable models; JVC CD Changer Controller with 8 pin mini DIN terminal).**

Nota:
Para operaciones de CD refiérase a las instrucciones del controlador cambiador de CD de JVC, etc., **(modelos aplicables: controlador cambiador de CD de JVC con terminal DIN de 8 miniclavijas).**

Remarque:
Pour les opérations CD, se reporter au manuel d'instructions du contrôleur de changeur CD JVC, etc. **(modèles applicables: Contrôleur de changeur CD JVC avec une miniprise DIN à 8 broches).**

www.manualscenter.com

WARNING

1. This unit is designed to operate with 12 volts DC, NEGATIVE ground electrical systems only.
2. Replace the fuse with one with the specified rating. If the fuse blows frequently, consult your nearest JVC car audio dealer.

Mistracking
Mistracking may occur when driving on an extremely rough road. The unit and compact disc will not be damaged by mistracking, however, since it is offensive to the ear, stop playback and restart when you reach a road that's in good condition.

ADVERTENCIA

1. Esta unidad ha sido diseñada para funcionar con 12 voltios de CC, con sistemas eléctricos de masa NEGATIVA solamente.
2. Reemplace el fusible por uno que tenga las características especificadas. Si éste se quema a menudo, consulte a su concesionario JVC de equipos de audio para automóviles más cercano.

Mal seguimiento
El mal seguimiento se produce cuando se conduce por una carretera muy irregular. No obstante, aunque la unidad y compact disc no se dañarán por esta razón, es conveniente detener la reproducción y volver a escuchar el disco cuando llegue a una carretera en buenas condiciones, puesto que resulta molesto para los oídos.

AVERTISSEMENT

1. *Cet appareil est conçu pour fonctionner sur courant continu de 12 volts, à systèmes électriques de masse NEGATIVE seulement.*
2. *Remplacer le fusible par un autre de la valeur spécifiée. Si le fusible saute souvent, consulter votre revendeur d'autoradios JVC le plus proche.*

Erreur d'alignement
Un problème d'alignement peut se produire en conduisant sur une route très mauvaise. L'appareil et le disque audionumérique ne seront pas abîmés par un problème d'alignement, toutefois, comme ce n'est pas agréable pour les oreilles, arrêter la lecture et la reprendre quand la route sera meilleure.

PRECAUTIONS

1. **Car's Internal Temperature**
   Before listening to CDs after your car has been parked for some time in low or high temperatures, wait until the temperature inside the car stabilizes.

PRECAUCIONES

1. **Temperatura interna del automóvil**
   Antes de escuchar un CD después de que su automóvil haya estado estacionado durante algún tiempo en bajas o altas temperaturas, espere hasta que la temperatura dentro del mismo se estabilice.

PRECAUTIONS A OBSERVER

1. **Température ambiante dans la voiture**
   Pour l'écoute de disques audionumériques après un stationnement assez prolongé de la voiture à la chaleur ou au froid, attendre que la température dans la voiture se stabilise.

2. **Condensation**
   In the following cases, moisture may condense on the lens, a critical part of the CD player, making the CD signal unreadable:
   - When a heater has just been turned on.
   - When humidity is high.

   In these cases, unload the CD magazine and wait for 1 or 2 hours.
3. **Volume Setting**
   - CDs produce very little noise compared with analog sources. If the volume level is adjusted for these sources, the speakers may be damaged by the sudden increase in the output level. Therefore, lower the volume before operation and adjust it as required during playback.
   - Adjust the volume so that you can hear sounds outside the car.

2. **Condensación**
   En los siguientes casos, la humedad puede condensarse en la lente, que es un componente clave del reproductor de CD, imposibilitando la lectura de la señal del mismo:
   - Cuando se haya encendido un calentador.
   - Cuando la humedad es alta.

   En tales casos, extraiga el magazín y espere durante 1 o 2 horas.
3. **Ajuste del volumen**
   - El CD produce muy poco ruido en comparación con las fuentes analógicas de sonido. Si el nivel de volumen está ajustado para estas fuentes, se puede dañar los altavoces debido al súbito incremento del nivel de salida. Por lo tanto, reduzca el volumen antes de ponerlo en funcionamiento y ajústelo como desee durante la reproducción.
   - Ajuste el volumen de tal manera que usted pueda escuchar los sonidos fuera del automóvil.

2. **Condensation**
   Dans les cas suivants, de l'humidité peut se condenser sur la lentille, une pièce vitale du lecteur CD, rendant impossible la lecture du signal CD:
   - *Quand le chauffage vient juste d'être mis.*
   - *Quand l'humidité est forte.*

   Dans ces cas, retirer le magasin CD et attendre environ 1 à 2 heures.
3. **Réglage du volume**
   - *Les disques audionumériques produisent très peu de bruit comparés avec des sources analogiques. Si le niveau du volume est réglé comme pour ces sources, les haut-parleurs peuvent être abîmés par une augmentation soudaine du niveau de sortie. Par conséquent, baisser le volume avant fonctionnement et le régler comme voulu pendant la lecture.*
   - *Régler le volume pour pouvoir entendre les sons à l'extérieur de la voiture.*

www.manualscenter.com

INSTALLATION

- Before installation, be sure to remove the holder (shown by Ⓐ) for transportation. Now, stick the seals provided over the holes in the bottom of the unit. (Fig. a)

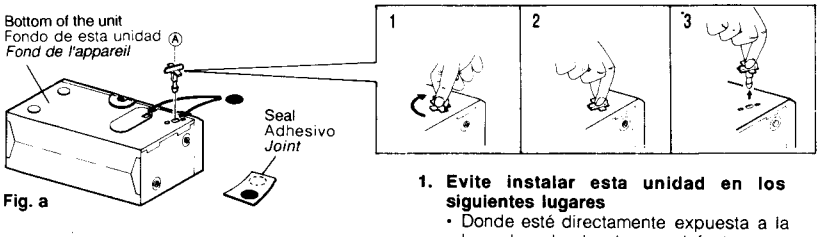

Fig. a

1. **Avoid installing in the following places**
   - Where it would be exposed to direct sunlight or heat directly from the heater or in an extremely hot place.
   - Where it would be subject to rain, water splashes or excessive humidity.
   - Where it would be subject to dust.
   - Where it would be positioned on an incline or unstable place.
   - Above connection cords or on the floor under which there is piping.
   - Where it could damage the car's fittings (spare tire, etc.) in or under the trunk.
2. Before drilling holes in the trunk to install the unit, make sure that there is a sufficient space under the trunk so that you do not drill holes in the fuel tank, etc.
3. Firmly install the unit using the provided screws.

INSTALACION

- Antes de la instalación, asegúrese de extraer el soporte (indicado con Ⓐ) para el transporte. Posteriormente, fije los sellos suministrados en los orificios en la parte inferior de la unidad. (Fig. a)

1. **Evite instalar esta unidad en los siguientes lugares**
   - Donde esté directamente expuesta a la luz solar, al calor de un calefactor o en un lugar con temperatura muy alta.
   - Donde esté expuesta a la lluvia, salpicaduras de agua o humedad excesiva.
   - Donde haya polvo.
   - En lugares inclinados o inestables.
   - Sobre los cordones de conexión o en el piso debajo del cual se encuentra la tubería.
   - Donde podría dañar los accesorios del automóvil (neumático de repuesto, etc.) en/o debajo del baúl.
2. Antes de perforar orificios en el baúl para instalar la unidad, asegúrese que haya suficiente espacio debajo del baúl ya que podría llegar a perforar el depósito de combustible, etc.
3. Instale firmemente la unidad utilizando los tornillos suministrados.

MISE EN PLACE

- *Avant installation, bien retirer la griffe (montrée par Ⓐ) pour le transport. Coller alors les joints fournis sur les trous sur le fond de l'appareil. (Fig. a)*

1. **Eviter l'installation dans les endroits suivants**
   - *Où il risque d'être exposer directement au soleil ou chauffé directement par le chauffage ou dans un endroit très chaud.*
   - *Où il risque d'être mouillé par la pluie, les flaques d'eau ou dans une forte humidité.*
   - *Dans les endroits poussiéreux.*
   - *Où il serait positionné sur une surface inclinée ou instable.*
   - *Au-dessus des cordons de raccordements ou sur le plancher sous lequel il y a une tuyauterie.*
   - *Là où il pourrait endommager des accessoires de la voiture (roue de secours, etc.) dans ou sous le coffre.*
2. *Avant de percer des trous dans le coffre pour installer l'appareil, s'assurer qu'il y a un espace suffisant sous le coffre pour ne pas faire de trous dans le réservoir de carburant, etc.*
3. *Installer fermement l'appareil en utilisant les vis fournies.*

(Example of installation A)

- **When installing on the floor of the trunk, etc. using the mounting base**

1. Stick spacer on the bottom of the mounting base. (Fig. b)
2. Remove the carpet from the place where the unit is to be installed and mark the position of the mounting base, then stick the mounting base on the floor. (Fig. c)

   Note:
   When sticking the mounting base on the floor, wipe off the surface dirt, oil, etc. and avoid installing on a concave or convex surface.

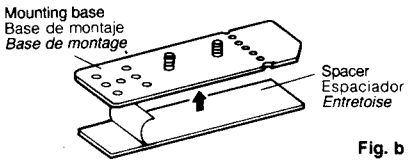

Fig. b

- **It is recommended that you install the unit directly using tapping screws when mistracking occurs. (See page 9.)**

3. Cut the carpet so the bolts fit through it. (Fig. d)

(Ejemplo de instalación A)

- **Cuando realice la instalación sobre el piso del baúl, etc., utilizando la base de montaje**

1. Fije el espaciador en la parte inferior de la base de montaje. (Fig. b)
2. Extraiga la alfombra del sitio donde se instalará la unidad y marque la posición de la base de montaje , luego fije la base de montaje sobre el piso. (Fig. c)

   Nota:
   Cuando adhiera la base de montaje al piso, limpie la suciedad, el aceite, etc. del mismo y evite instalarla en superficies cóncavas o convexas.

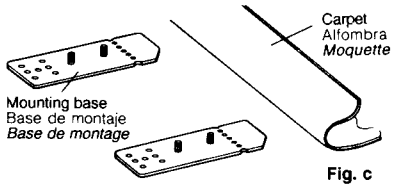

Fig. c

- **Se recomienda instalarla en la unidad directamente utilizando los tornillos para que no ocurran errores de seguimiento. (Ver página 9.)**

3. Haga un corte en la alfombra para poder meter los pernos. (Fig. d)

(Exemple d'installation A)

- **Installation sur le plancher du coffre, etc. en utilisant la base de montage**

1. *Coller l'entretoise sur le fond de la base de montage. (Fig. b)*
2. *Retirer la moquette à l'endroit où l'appareil va être installé et marquer la position de la base de montage, puis coller la base de montage sur le plancher. (Fig. c)*

Remarque:
En collant la base de montage sur le plancher, nettoyer la surface pour retirer la poussière (graisse, etc.) et éviter l'installation sur une surface concave ou convexe.

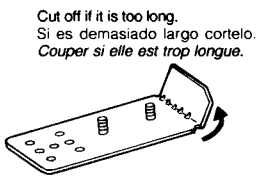

- **Si des erreurs d'alignement se produisent, il est recommandé d'installer l'appareil directement en utilisant des vis autotaraudeuses. (Voir page 9.)**

3. *Découper la moquette pour que les boulons s'adaptent bien. (Fig. d)*

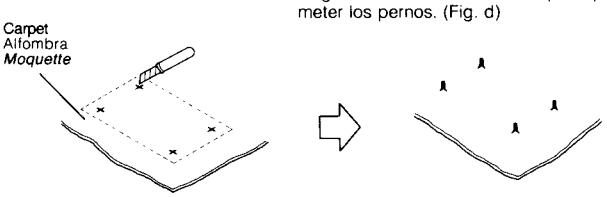

Fig. d

www.manualscenter.com

4. Install the mounting brackets on the side panels of the unit using screws (M4 x 8 mm). (Fig. e)

4. Instale las ménsulas de montaje en los paneles laterales de la unidad utilizando tornillos (M4 x 8 mm). (Fig. e)

4. Installer les supports de montage sur les panneaux latéraux de l'appareil en utilisant des vis (M4 x 8 mm). (Fig. e)

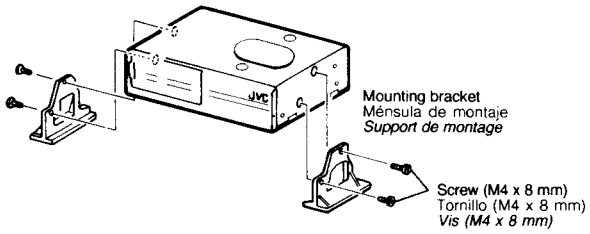

Fig. e

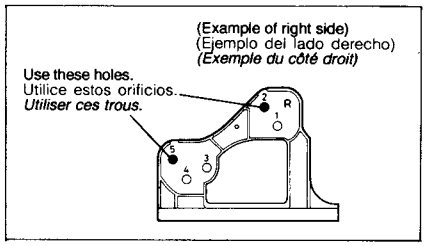

5. Place the unit on the carpet so that the bolts fit in the holes of the mounting bracket and install using washers and nuts (M5). (Fig. f)

5. Coloque la unidad sobre la alfombra de tal modo que los pernos entren en los orificios de la ménsula de montaje e instale utilizando las arandelas y las tuercas (M5). (Fig. f)

5. Placer l'appareil sur la moquette pour que les boulons tombent dans les trous du support de montage et installer en utilisant des rondelles et des écrous (M5). (Fig. f)

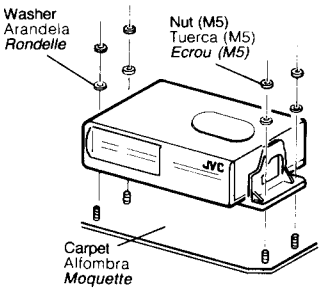

Fig. f

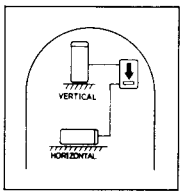

See page 10.
Ver página 10.
Voir page 10.

(Example of installation B)

- **When installing on the floor of the trunk, etc. using tapping screws**

1. Install the mounting brackets on the side panels of the unit using screws (M4 x 8 mm) referring to the diagram. (Fig. e)
2. Install the unit on the floor of the trunk using tapping screws. (Fig. g)

(Ejemplo de instalación B)

- **Cuando realice la instalación sobre el piso del baúl, etc., utilizando tornillos roscachapa**

1. Instale las ménsulas de montaje en los paneles laterales de la unidad utilizando tornillos (M4 x 8 mm) y refiriéndose al diagrama. (Fig. e)
2. Instale la unidad en el piso del baúl usando tornillos roscachapa. (Fig. g)

(Exemple d'installation B)

- **Installation sur le plancher du coffre, etc. en utilisant la base de montage**

1. Installer les supports de montage sur les panneaux latéraux de l'appareil en utilisant des vis (M4 x 8 mm) en se référant au schéma. (Fig. e)
2. Installer l'appareil sur le plancher du coffre en utilisant des vis auto-taraudeuses. (Fig. g)

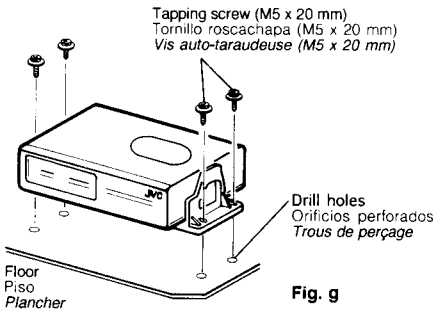

Fig. g

www.manualscenter.com

(No.49276) 7

(Example of other installations)

- **When installing the CD changer upright on the trunk floor. (Fig. h)**

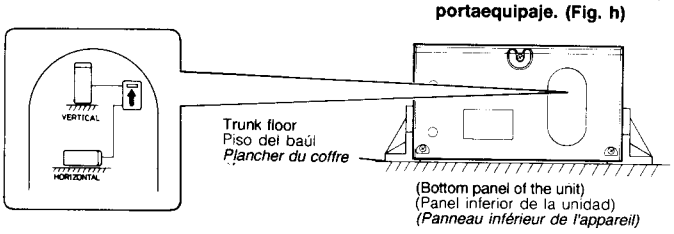

Fig. h

Notes:

1. To install, refer to the above "Example of installation A or B".
2. When the CD changer is installed upright, set the selector located at the bottom to the "VERTICAL" position. (When it is installed horizontally, be sure to set the selector to the "HORIZONTAL" position.)
   - When installing upright, securely install to the trunk floor.

- **When installing the CD changer to hang in the trunk space. (Fig i)**

Note:
To install, refer to the above "Example of installation A or B".

(Ejemplo de otras instalaciones)

- **Cuando instala el cambiador de CD verticalmente sobre el piso del portaequipaje. (Fig. h)**

Notas:

1. En cuanto a la instalación, refiérase al "Ejemplo de instalación A o B" mencionado.
2. Cuando instala el cambiador de CD verticalmente, coloque el selector ubicado en la parte inferior en la posición "VERTICAL". (Cuando lo instale horizontalmente asegúrese de colocar el selector en la posición "HORIZONTAL").
   - Cuando se instale vertical, colóquelo firmemente sobre el piso del baúl.

- **Cuando instala el cambiador de CD colgado en el compartimiento del portaequipaje. (Fig. i)**

Fig. i

Nota:
Para instalarlo refiérase al "Ejemplo de instalación A o B" de arriba.

(Exemple d'autres installations)

- **Installation du changeur CD droit sur le plancher du coffre. (Fig. h)**

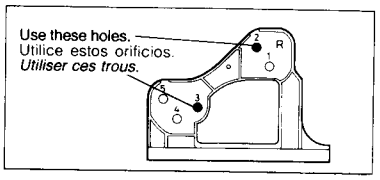

Remarques:

1. *Pour l'installation, se reporter aux exemples d'installation A ou B précédents.*
2. *Si le changeur CD est installé droit, mettre le sélecteur situé en bas sur la position "VERTICAL". (Quand il est installé horizontalement, s'assurer de bien régler le sélecteur sur la position "HORIZONTAL".)*
   - *En installant droit, monter fermement au plancher du coffre.*

- **Installation du changeur CD suspendu dans le coffre. (Fig i)**

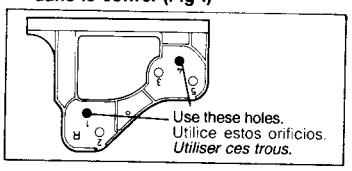

Remarque:
Pour l'installation, se reporter aux exemples d'installation A ou B précédents.

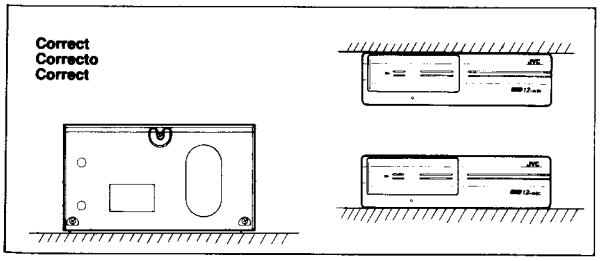

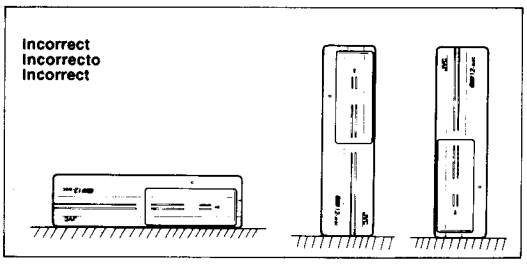

Fig. j

ELECTRICAL CONNECTIONS

To prevent short circuits from occurring, while making connections, keep the battery's negative terminal disconnected.
We recommend that you make all electrical connections (see Fig. k) before installing the unit. If you're not sure of your ability to correctly install this unit, have it installed by a qualified service technician.

Note:
This unit is designed for 12 volts DC, Negative Ground. If your vehicle does not have a 12 volt negative ground electrical system, you need a voltage inverter which can be bought from a JVC car audio dealer.

CONEXIONES ELECTRICAS

Para evitar cortocircuitos, mantenga desconectado el terminal negativo de la batería durante las conexiones.
Le recomendamos hacer todas las conexiones eléctricas (ver Fig. k) antes de instalar la unidad. Si no estuviera seguro de su habilidad para colocarla correctamente, hágala instalar por un técnico de servicio calificado.

Nota:
Esta unidad está diseñada para 12 V de CC, masa negativa. Si su vehículo no estuviera provisto de un sistema eléctrico de masa negativa de 12 voltios, necesitará un inversor de tensión que puede adquirir en un concesionario JVC de equipos de audio para automóviles.

RACCORDEMENTS ELECTRIQUES

Pour éviter tout court-circuit alors que vous effectuez les raccordements, laisser la borne négative de la batterie non branchée.
Nous vous conseillons de faire tous les raccordements électriques (voir la Fig. k) avant de mettre l'appareil en place. Si vous n'êtes pas sûr de vous, faites-le installer par un technicien qualifié.

Remarque:
Cet appareil est conçu pour un courant continu de 12 volts, à masse négative. Si votre véhicule ne fournit pas une masse négative de 12 volts, il vous faut un convertisseur de tension, que vous pouvez vous procurer chez un revendeur d'autoradios JVC.

www.manualscenter.com

- Be sure to ground this unit to the car's chassis.

Connections

- Asegúrese de conectar a masa esta unidad al chasis del automóvil.

Conexiones

- *Bien raccorder le câble de mise à la masse de cet appareil au châssis de la voiture.*

Raccordements

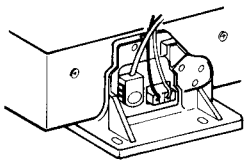

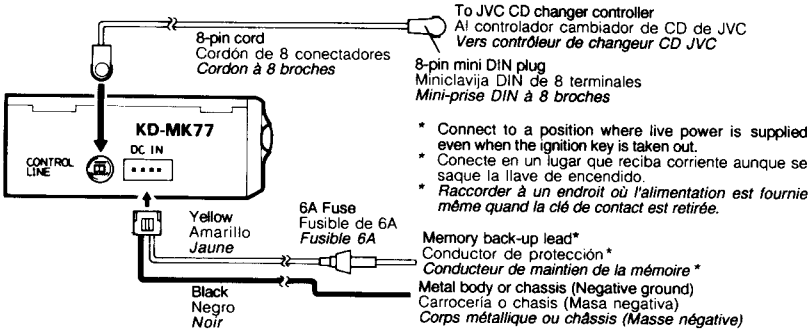

Fig. k

Note:
- The CD magazine cannot be ejected when the memory back-up lead or cord is disconnected or the fuse is blown.

Nota:
- El magazín de CD no puede ser eyectado cuando el cordón o conductor de protección de memoria está desconectado o el fusible está quemado.

Remarques
- *Le magasin CD ne peut pas être éjecté si le fil ou le cordon de maintien mémoire est débranché ou si le fusible est grillé.*

Microcomputer reset button
After completing installation and connection, load the magazine and press the reset button using a ball-point pen or other pointed instrument to reset the microcomputer.

Botón de reposicionamiento del microcomputador
Después de completar la instalación y la conexión, cargue el magazín y presione el botón de reposicionamiento utilizando un bolígrafo u otro instrumento en punta para reposicionar el microcomputador.

Touche de remise à zéro du microprocesseur
Après avoir terminer l'installation et les raccordements, charger le magasin puis appuyer sur la touche de remise à zéro en utilisant un stylo à bille ou un autre instrument pointu pour réinitialiser le microprocesseur. Normalement ne pas utiliser cette touche.

Normally do not use this button. However, when the power supply is interrupted such as for replacement of the car's battery, press this button. Also press it when the built-in microcomputer does not operate properly due to noise or when the changer does not function correctly when the controller is operated.

Normalmente, este botón no se usa. Sin embargo, cuando la fuente de energía es interrumpida como ser en caso de reemplazo de la batería del automóvil, presione este botón. Presiónelo también cuando el microcomputador incorporado no funcione adecuadamente debido al ruido o si el cambiador no funciona correctamente cuando se opera el controlador.

Cependant, quand l'alimentation est interrompue comme pour le remplacement de la batterie de la voiture, appuyer sur cette touche. La presser également si le microprocesseur ne fonctionne pas correctement à cause de parasites ou si le changeur ne fonctionne pas correctement quand le contrôleur est utilisé.

Microcomputer reset button
Botón de reposición de la microcomputadora
Touche de remise à zéro du microprocesseur

LOCATION OF CONTROLS

UBICACION DE LOS CONTROLES

EMPLACEMENT DES COMMANDES

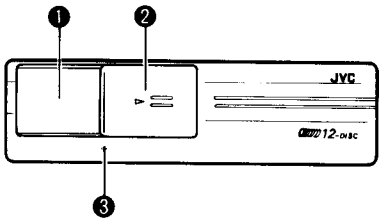

❶ CD magazine slot
❷ Door
❸ Microcomputer reset button

❶ Ranura del magazín de CD
❷ Puerta
❸ Botón de reposición del microcomputador

❶ *Fenêtre de magasin CD*
❷ *Volet*
❸ *Touche de remise à zéro du microprocesseur*

www.manualscenter.com

HANDLING COMPACT DISCS AND MAGAZINES

How to handle CDs

- Use compact discs with the mark shown.

- Do not touch the recorded surface of the disc (reflective side, opposite to the label) when handling the discs.

- **Storage**
  Make sure to keep discs in their cases. If discs are piled on top of one another without their cases, they may be damaged. Do not put discs where they will be exposed to direct sunlight or in a place subject to high temperatures and humidity. Avoid leaving discs in your car.

MANIPULACION DE COMPACT DISC Y MAGAZINES

Cómo manipular compact disc

- Utilice compact disc con la marca indicada.

- No toque la superficie grabada (lado con reflejos, opuesto a la etiqueta) mientras manipula los discos.

- **Cómo guardar los discos**
  Guarde los discos en sus cajas. No apile discos sin sus cajas, ya que podrían dañarse. No ponga los discos donde queden expuestos a la luz solar directa o en lugares con alta temperatura o humedad. No los deje en el automóvil.

MANIPULATION DES DISQUES AUDIONUMERIQUES ET DES MAGASINS

Manipulation des disques audionumériques

- *Utiliser des disques audionumériques avec la marque montrée.*

- *Ne pas toucher à la surface enregistrée du disque (la face réfléchissante, le verso de l'étiquette) en manipulant les disques.*

- **Stockage**
  Bien conserver les disques dans leurs boîtes. Si des disques sont empilés les uns sur les autres sans leurs boîtes, ils peuvent être abîmés. Ne pas mettre des disques où ils pourraient être exposés à la lumière directe du soleil ou dans un endroit sujet à de fortes températures ou à l'humidité. Eviter de laisser des disques dans votre voiture.

Hold down the center holder.
Presione el sujetador central.
Appuyer au milieu du support.

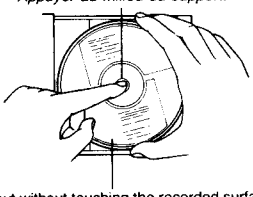

Lift it out without touching the recorded surface.
Levántelo para sacarlo sin tocar la superficie grabada.
Le lever sans toucher à la surface enregistrée.

Insert with the label facing up.
Inserte con la etiqueta hacia arriba.
Mettre en place avec l'étiquette au-dessus.

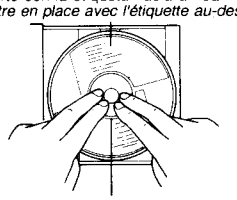

Press gently on the disc to insert.
Presione suavemente el disco para insertalo.
Appuyer légèrement sur le disque pour le mettre en place.

- **Maintenance of discs**
- When fingerprints and dirt adhere to a disc, wipe the disc clean with a soft, dry cloth, wiping from the inside towards the edge. If it is difficult to clean, wipe the disc with a cloth moistened with water.
- Do not use record cleaners, benzine, alcohol or antistatic agents.
- Do not damage the label side or stick paper or adhesive to the surface.

Correct
Correcto
Correct

Incorrect
Incorrecto
Incorrect

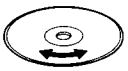

How to handle magazines

- **Care in handling magazines**

1. **Always keep twelve disc trays loaded in the magazine.**
2. When removing or inserting disc trays, hold the magazine horizontally.
3. Place compact discs on trays before inserting them in a magazine. Never put discs directly into magazines.
4. Do not expose it to high temperatures or direct sunlight.
5. Do not disassemble magazines.
6. Take care not to drop or hit magazines. Do not apply excessive pressure to disc trays which have been removed from magazines.
7. Never apply solvents such as benzine, thinner and insecticide to the magazine or disc trays. These solvents may erode their surfaces.

- **Mantenimiento de los discos**
- Limpie las huellas digitales y el polvo que se adhiere sobre el disco con un paño limpio y suave desde el centro hacia los bordes. Si no salen, límpielo con un paño humedecido con agua.
- No utilice limpiadores para discos, bencina, alcohol o agentes antiestáticos.
- No dañe el lado con etiqueta ni pegue papeles o adhesivos en la superficie.

Cómo manipular los magazines

- **Cuidado en la manipulación de magazines**

1. **Mantenga siempre los doce portadiscos colocados en el cargador.**
2. Al retirar o introducir las bandejas de discos, sujete el magazín horizontalmente.
3. Coloque los compact disc sobre las bandejas antes de introducirlas en un magazín. No ponga nunca los discos directamente en los magazines.
4. No lo exponga a la luz solar directa o a temperaturas elevadas.
5. No desarme los magazines.
6. No los deje caer ni los golpee. No aplique demasiada presión sobre las bandejas de discos extraídas de los magazines.
7. No use jamás solventes tales como bencina, diluyente o insecticida en el magazín o las bandejas. Los mismos podrían perjudicar su superficie.

- **Entretien des disques**
- *Si des empreintes digitales ou de la poussière adhèrent à un disque, essuyer le disque avec un tissu doux, sec et propre, en essuyant de l'intérieur vers l'extérieur. S'il est difficile à nettoyer, essuyer le disque avec un tissu humidifié avec de l'eau.*
- *Ne pas utiliser de nettoyants, benzine, alcool ou agent antistatique.*
- *Ne pas endommager le côté de l'étiquette ou coller du papier ou de la bande adhésive sur la surface.*

Manipulation des magasins

- **Faire attention en manipulant les disques**

1. **Toujours laisser douze tiroirs de disque chargés dans le magasin.**
2. *En retirant ou en introduisant les tiroirs de disque, tenir le magasin horizontalement.*
3. *Placer des disques audionumériques sur des tiroirs avant de les introduire dans un magasin. Ne jamais mettre directement des disques dans les magasins.*
4. *Ne pas exposer les magasins à de hautes températures ni aux rayons directs du soleil.*
5. *Ne pas démonter les magasins.*
6. *Faire attention de ne pas faire tomber ou cogner les magasins. Ne pas appliquer de pression excessive sur les tiroirs de disque qui ont été retirés des magasins.*
7. *Ne jamais appliquer de solvants comme de la benzine, du diluant ou des insecticides sur le magasin ou les tiroirs de disque. Ces solvants peuvent éroder leurs surfaces.*

www.manualscenter.com

* Additional magazine (XC-M120) must be purchased separately.

• How to load discs

• The discs are in numerical order, with 1 at the bottom and 12 at the top. Load discs in the magazine in the required order.

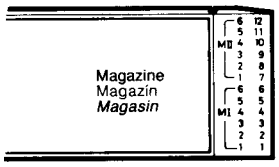

1. Disc trays can be removed from magazines.
   ① While pressing the RELEASE button....
   ② Slide the disc tray partly out.

2. Pull the disc tray completely out of the magazine and place a CD on it with its label side up.

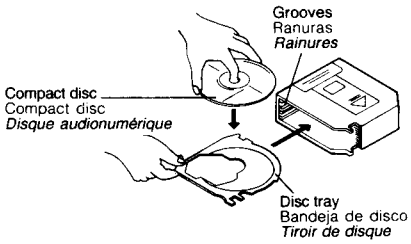

* Los magazines adicionales (XC-M120), deben ser adquiridos separadamente.

• Colocación de discos

• Los discos se colocan por orden numérico, con el 1 abajo y 12 arriba. Coloque los discos en el magazín en el orden deseado.

1. Las bandejas pueden sacarse de los magazines.
   ① Mientras presiona el botón RELEASE ....
   ② Deslice hacia afuera parcialmente el portadisco.

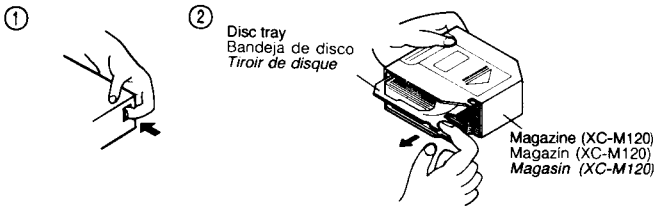

2. Saque completamente la bandeja del magazín y coloque el disco con la etiqueta hacia arriba.

** Des magasins supplémentaires (XC-M120) doivent être achetés séparément.*

• Chargement des disques

• Les disques sont par ordre numérique, avec 1 en bas et 12 en haut. Charger les disques dans le magasin dans l'ordre voulu.

1. Les tiroirs de disque peuvent être retirés des magasins.
   ① Tout en appuyant sur la touche RELEASE...
   ② Faire coulisser le tiroir de disque en partie vers l'extérieur.

2. Tirer le tiroir de disque complètement à l'extérieur du magasin et placer un disque audionumérique sur le plateau avec l'étiquette au dessus.

3. Line up the disc tray with the grooves in the magazine, and push the disc tray all the way in. Never bend or force the disc tray into the magazine. It is not necessary to depress the disc tray RELEASE button when inserting the disc tray.
   • Check that the disc tray is securely inserted into the magazine. If a CD becomes disengaged from the disc tray, reposition it on the disc tray.

Notes:

• If a disc tray is inserted at an angle, it may cause a malfunction.

3. Alinee la bandeja con las ranuras del magazín e introdúzcala completamente. Nunca doble o fuerce la bandeja para que entre en el magazín. No es necesario presionar el botón RELEASE del portadisco cuando inserta el mismo.
   • Verifique que el portadisco esté insertado firmemente dentro del magazín. Si un CD se desengancha del portadisco, reposiciónelo en el mismo.

Notas:

• Si inserta la bandeja inclinada, se producirán fallas de funcionamiento.

3. Aligner le tiroir de disque avec les rainures dans le magasin, et pousser complètement le tiroir de disque. Ne jamais fausser ou forcer le tiroir de disque dans le magasin. Il n'est pas nécessaire d'appuyer sur la touche de libération (RELEASE) du tiroir de disque en introduisant le tiroir.
   • Vérifier que le tiroir de disque est bien introduit dans le magasin. Si un disque devient désengagé du tiroir de disque, le remettre sur le tiroir.

Remarques:

• Si un tiroir de disque est introduit de travers, il peut causer un mauvais fonctionnement.

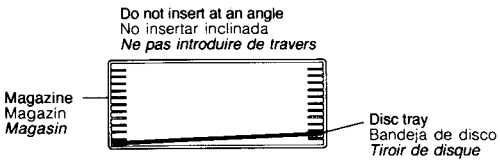

• There are openings in the disc trays through which signals are read from the discs. These openings leave part of the shiny side of the disc exposed. Be careful not to touch the shiny surface of the disc.
• It is not possible to play a compact disc if it is installed upside down.
• Be sure to insert the twelve disc trays when using the magazine. If not, the CD changer may not operate correctly.

• Las bandejas tienen aberturas por las cuales son leídas las señales de los discos. Estas aberturas dejan expuesta parte del lado brillante del disco. Tenga cuidado de no tocar la superficie brillante del disco.
• No es posible reproducir compact disc colocados al revés.
• Asegúrese de insertar los portadiscos de doce discos cuando utiliza el magazín. De lo contrario, el cambiador de CD puede no funcionar correctamente.

• Il y a des ouvertures dans les tiroirs de disque à travers lesquelles les signaux sont lus des disques. Ces ouvertures laissent une partie de la face brillante du disque exposée. Faire attention de ne pas toucher à la surface brillante du disque.
• Il n'est pas possible de lire un disque audionumérique s'il est installé sens dessus dessous.
• Bien introduire les douze tiroirs de disque en utilisant le magasin. Sinon, le changeur CD peut ne pas fonctionner correctement.

www.manualscenter.com

How to load a magazine

1. Open the door.

Colocación de un magazín

1. Abra la puerta.

Chargement d'un magasin

1. Ouvrir le volet.

2. Load a magazine.
   - **Load a magazine into the CD changer with the " Δ " mark on top (Fig. I) and the CD insertion side to the right.**
   - If a magazine's label partly peels off, it may cause a malfunction. If this happens, remove the label or stick it on firmly again.

2. Coloque un magazín.
   - **Coloque un magazín en el cambiador de CD con la marca " Δ " apuntando hacia arriba (Fig. I) y el lado de inserción del CD hacia la derecha.**
   - La etiqueta despegada de un magazín puede producir fallos de funcionamiento. En tal caso, saque la etiqueta o fíjela bien nuevamente.

2. Charger un magasin.
   - **Charger un magasin dans le chargeur CD avec la marque " Δ " en haut (Fig. I) et le côté d'insertion CD sur la droite.**
   - *Si l'étiquette d'un magasin se décolle, elle peut causer un mauvais fonctionnement. Si cela arrive, retirer l'étiquette ou la recoller correctement.*

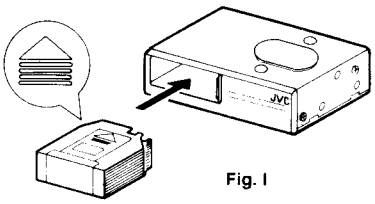

Fig. I

Caution:
- **Do not insert your hands or any foreign object into the loading slot as you may be injured or cause malfunctions or damage.**

Precaucion:
- **No introduzca la mano o algún objeto por la ranura de carga pues podría lastimarse o producir fallas de funcionamiento o daños.**

Attention:
- **Ne pas introduire vos mains ou d'objet étranger dans la fenêtre de chargement, vous pourriez vous blesser ou causer des mauvais fonctionnements ou dommages.**

3. Close the door.
   - The door should be closed other than when a magazine is loaded or unloaded.

3. Cierre la puerta.
   - La puerta debe estar cerrada excepto al poner o sacar un magazín.

3. Fermer le volet.
   - *Le volet doit être fermé en dehors du chargement ou du retrait d'un magasin.*

How to unload a magazine

To unload a magazine, open the door fully to the right side to eject the magazine.

Cómo retirar un magazín

Para colocar un cargador, abra la puerta totalmente hacia el lado derecho para eyectar el magazín.

Retrait d'un magasin

Pour décharger un magasin, ouvrir complètement le volet vers la droite pour éjecter le magasin.

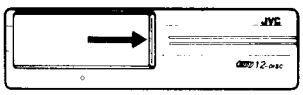

Note:
When the magazine cannot be ejected, push in the magazine and play the 12th disc once more; when play has ended, repeat the above procedure (i.e., open the door).

- **Listening to CDs**
  - This unit does not have operation buttons to play CDs. CD operations can be performed using the JVC CD changer controller, etc. connected to this unit.
    For CD operations, refer to the instructions of the CD Changer Controller.

Nota:
Cuando el magazín no pueda ser eyectado, presione el magazín hacia adentro y reproduzca el disco no. 12 una vez más; cuando la reproducción haya terminado, repita el procedimiento de arriba; (abra la puerta).

- **Reproducción de CDs**
  - Esta unidad no tiene botones de operación para reproducción de CD. Las operaciones de CD pueden ser ejecutadas utilizando el controlador cambiador de CD de JVC, etc., conectado a esta unidad.
    Para las operaciones de CD refiérase a las instrucciones del controlador cambiador de CD.

Remarque:
Si le magasin ne peut pas être éjecté, pousser sur le magasin et lire une fois de plus le 12ème disque; quand la lecture est terminée, refaire la procédure précédente (c'est à dire; ouvrir le volet).

- **Ecoute des disques audionumériques**
  - *Cet appareil n'a pas de touches de fonctionnement pour lire les disques. Les opérations CD peuvent être effectuées en utilisant le contrôleur de changeur CD JVC, etc. raccordé à cet appareil.*
    Pour les opérations CD, se reporter au manuel d'instructions du contrôleur de changeur CD.

www.manualscenter.com

1 Location of main parts

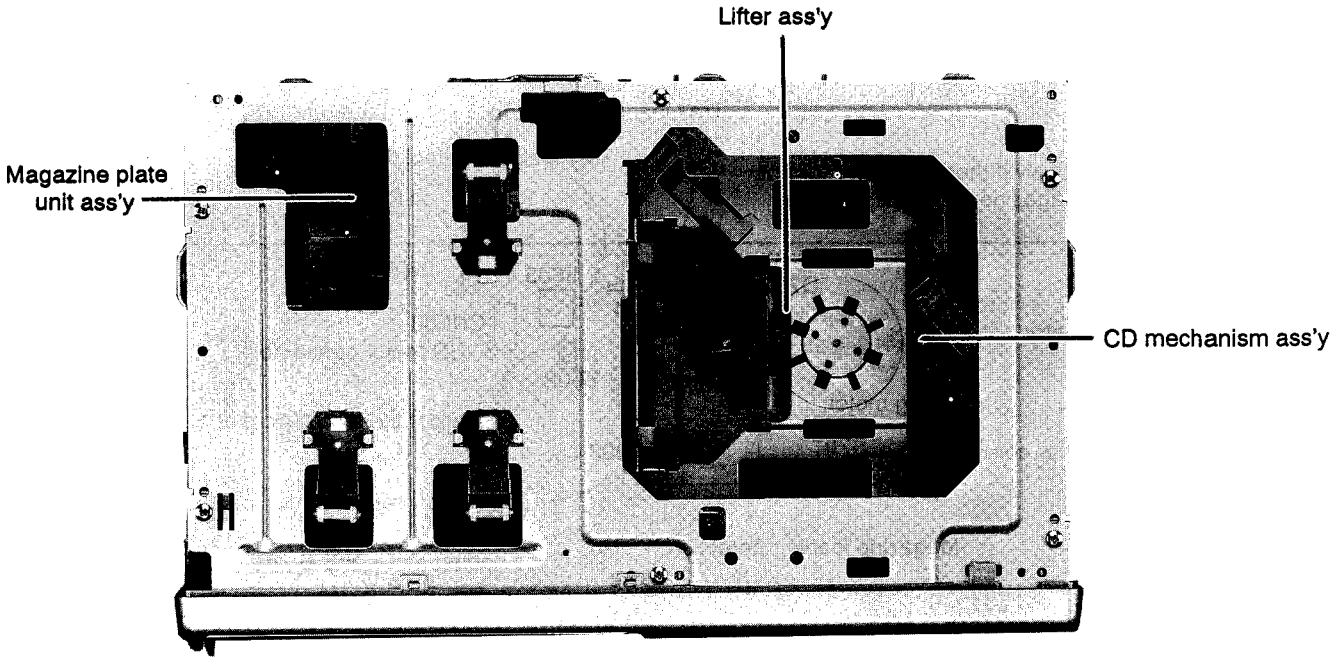

Fig.1 – 1

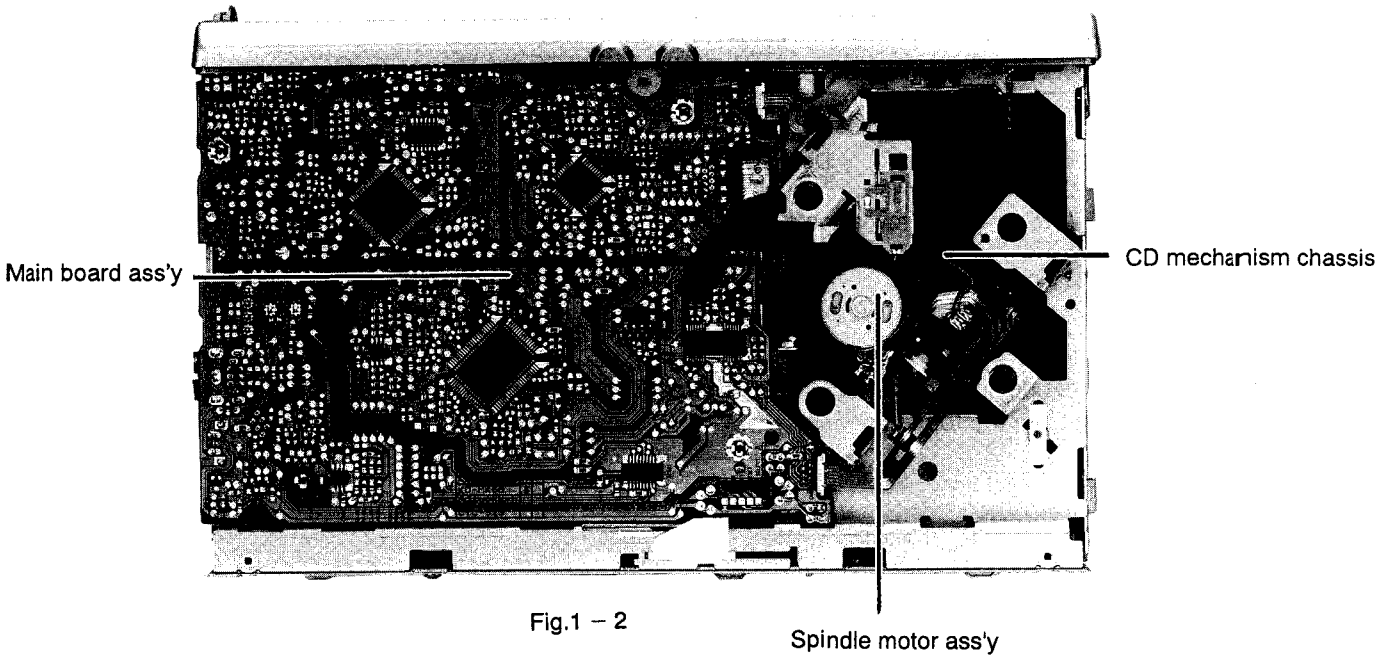

Fig.1 – 2

◆ CD mechanism ass'y

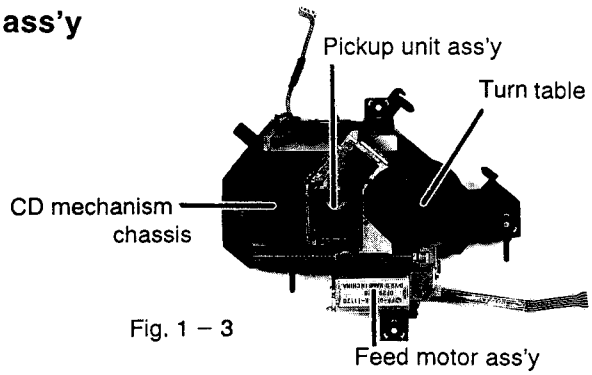

Fig. 1 – 3

www.manualscenter.com

■ Positioning diagram of switches and motors, etc.

◆ Top view

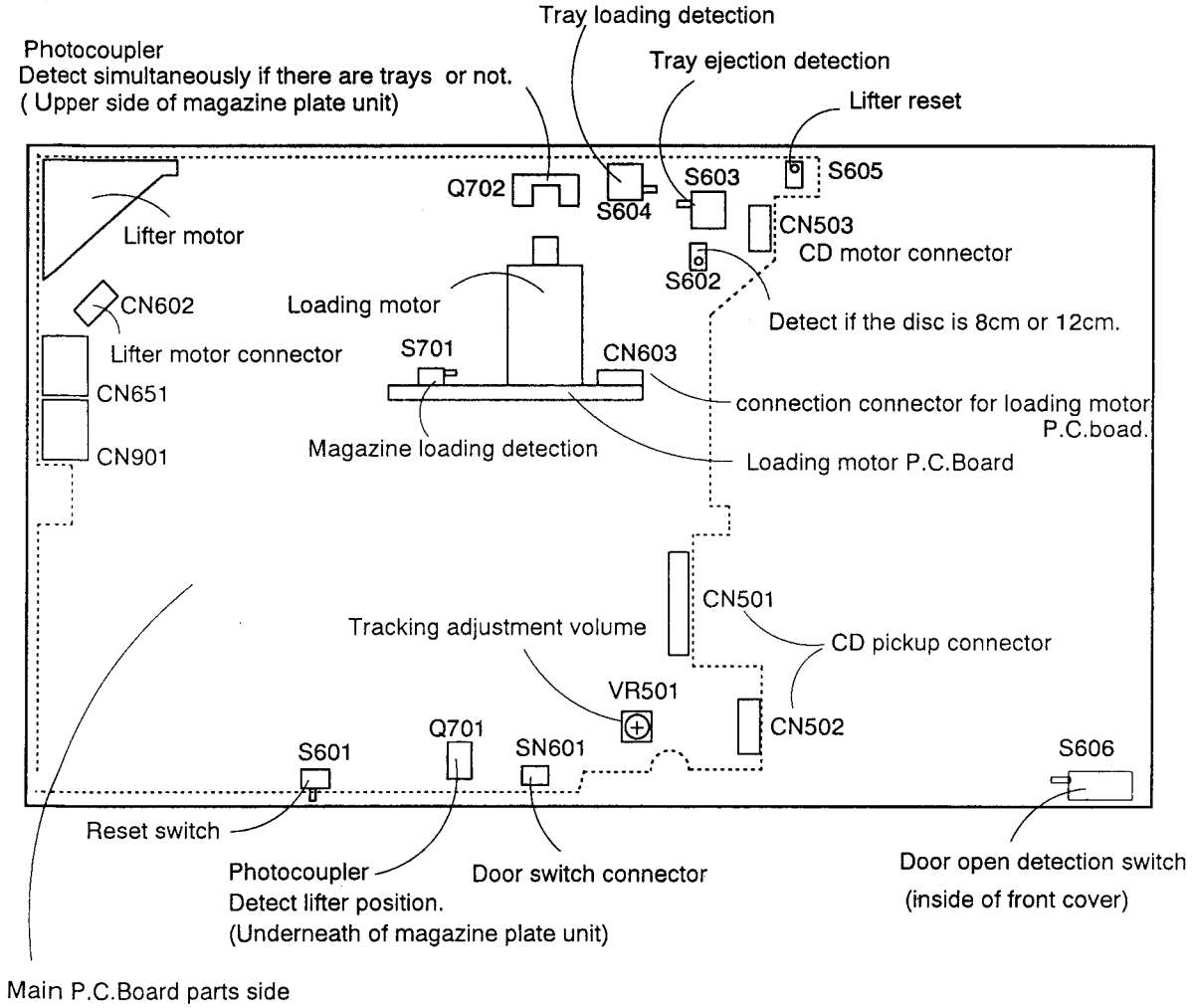

Fig. 1 – 4

★ All components except lifter motor and Q702 photocoupler indicater in the fig. 1 – 4 can not be seen from the top .

www.manualscenter.com

2 Removal of main parts

Procedures for removal of parts

(Disassemble the component parts considering assembly)

◆ Main P.C.B. Ass'y

Remove the four screws retaining the top cover, bottom cover, front panel ass'y and main P.C.B. Remove the flexible wire from the CD mechanism ass'y.

◆ Lifter Ass'y

Remove the top cover, bottom cover, front panel ass'y, top plate ass'y, rear panel ass'y and lifter ass'y.

◆ CD Mechanism

Remove the top cover, bottom cover, front panel ass'y, top plate ass'y, rear panel ass'y, lifter ass'y and CD mechanism ass'y.

◆ Magazine Plate Unit

Remove the top cover, bottom cover, front panel ass'y, top plate ass'y, rear panel ass'y and lifter ass'y and magazine plate unit.

◆ Loading Gear Ass'y

Remove the top cover, bottom cover, front panel ass'y, top plate ass'y, rear panel ass'y, lifter ass'y, magazine plate unit ass'y and loading gear ass'y.

Disassembly procedure for KD-MK77

■ External case sections

◆ Top Cover (see Fig.2-1~Fig. 2-2)

1. Remove four retaining screws ① from the left and right.
2. Remove one screw ⑰ retaining the front side of top cover.
3. Remove by pushing the right side of top cover inward to lift it up.

◆ Bottom Cover (see Fig.2-3)

1. Remove two screws ② retaining the bottom cover.
2. Remove one screw ③ retaining center section of bottom cover.

◆ Front Panel (see Fig.2-4~Fig. 2-6)

1. Slightly pull out the panel while disengaging the right and left tabs [A].
2. Remove the door switch connector (CN601) from the front panel door in the center of main P.C.B.

Left side view

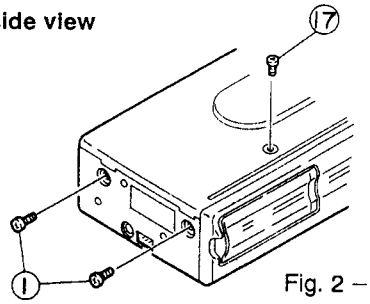

Fig. 2 – 1

Right side view

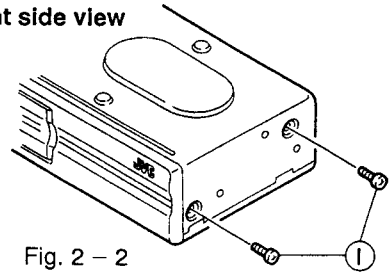

Fig. 2 – 2

Bottom view

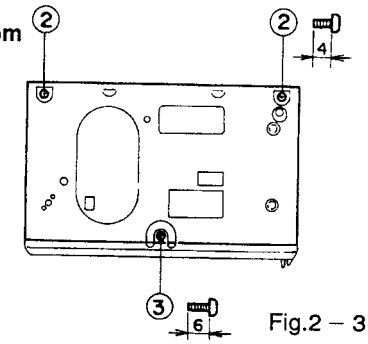

Fig.2 – 3

Right side view

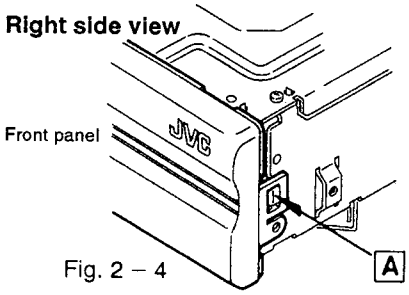

Fig. 2 – 4

Left side view

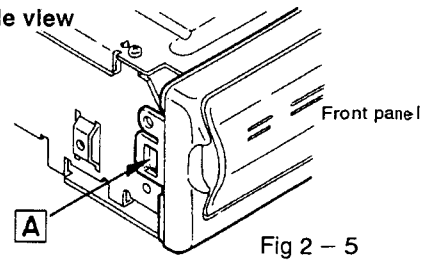

Fig 2 – 5

Magazin loading section

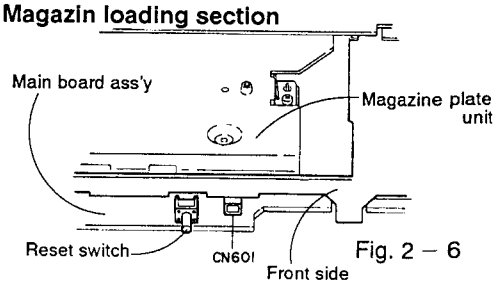

Fig. 2 – 6

www.manualscenter.com

■ Mechanism section (remove in the following order)

◆ Top Plate Ass'y (see Fig. 2-7)

1. Remove the six screws ⑥ retaining the top plate.
2. Lift up the top plate and slide it to the front so that the safety rod is vertical, then remove it from the right side.

◆ Rear Panel (see Fig. 2-7~Fig. 2-10)

1. Remove the lifter tension arm spring.
2. Remove the one E-washer ⑦ of lifter section.
3. Remove the lifter tension arm.

Note:

With the unit's front side facing you and the unit placed on its bottom, float the reset switch connected to the main P.C.B.

4. Turn the lifter motor clockwise from the main P.C.B. to elevate lifter to the uppermost position. (The torque of lifter motor is small.)
5. Remove three screws ⑧ retaining the rear panel to remove it.
6. Remove the flexible P.C.B. for the lifter ass'y sensor from the lifter motor P.C.B connector.
7. Remove the front side arm of lifter ass'y, then pull the lifter ass'y towards the magazine slot and remove it from the rear loading arm.

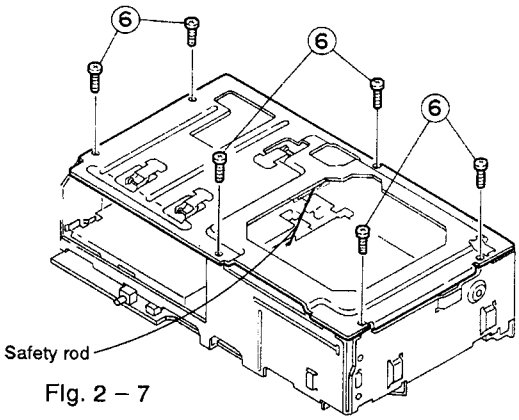

Fig. 2 – 7

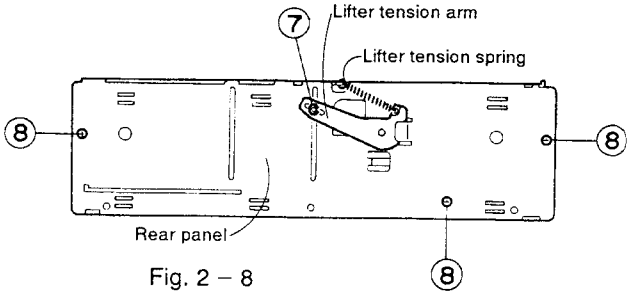

Fig. 2 – 8

Rear bottom view

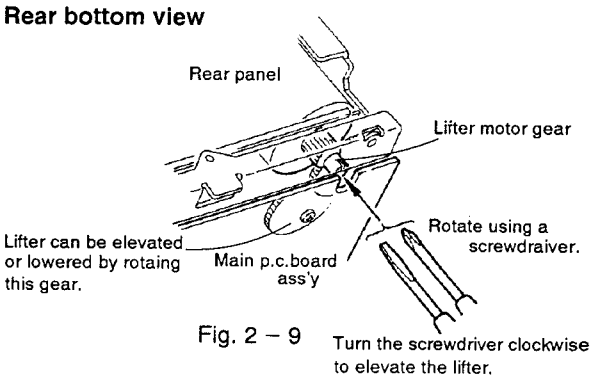

Fig. 2 – 9

Rear side view

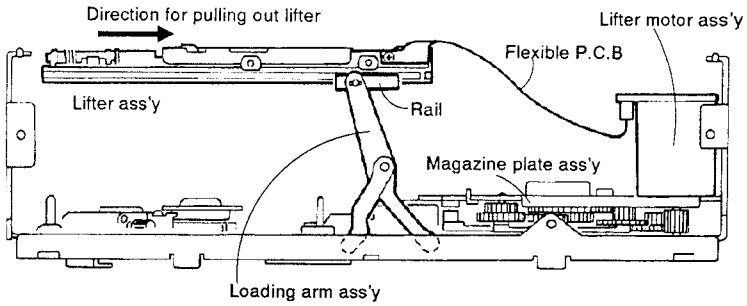

Fig. 2 – 10

www.manualscenter.com

◆ Magazine Plate Unit (see Fig. 2-11)

1. Remove three screws ⑨ and ⑩ retaining the magazine plate unit.
2. Lift up the magazine plate unit to remove the lifter motor from the main P.C.B. connector.

◆ Loading Gear Ass'y (see Fig. 2-12~Fig. 2-13)

1. Remove one screw ⑪ retaining the loading gear and remove the connector between the main P.C.B. and motor P.C.B.

Note:

When the loading gear is removed, the internal gear is disengaged, so care should be taken when handling the gears. (Do not reassemble the gears by placing them in the wrong direction.)

2. Turn the slider gear counterclockwise (indicated by the arrow) and remove one screw ⑫ retaining the sensor.
3. Remove two screws ⑬ retaining the main P.C.B. to disengage the sensor.

◆ CD Mechanism Ass'y (see Fig. 2-11~Fig. 2-13)

1. Remove CD mechanism's three flexible wires (CN501, CN502, CN503) from the main P.C.B. ass'y. (Pull the tabs in both side panels.)

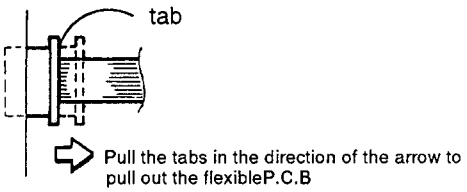

2. Remove four tension springs between the CD mechanism and chassis.
3. Facing the front of the unit, remove the three screws ⑭ retaining the damper.
4. Remove the stopper by pressing section ⓐ indicated by the arrow to disengage the CD chassis hold arm.
5. Lift the chassis slightly and remove the CD mechanism ass'y, **(Be careful -- the coil springs are easily removed.)**

◆ Main P.C.B. Ass'y

1. Remove four screws ⑬ and ⑮ retaining the main P.C.B. ass'y.
2. Remove the one screw ⑯ retaining the transister.

Top View

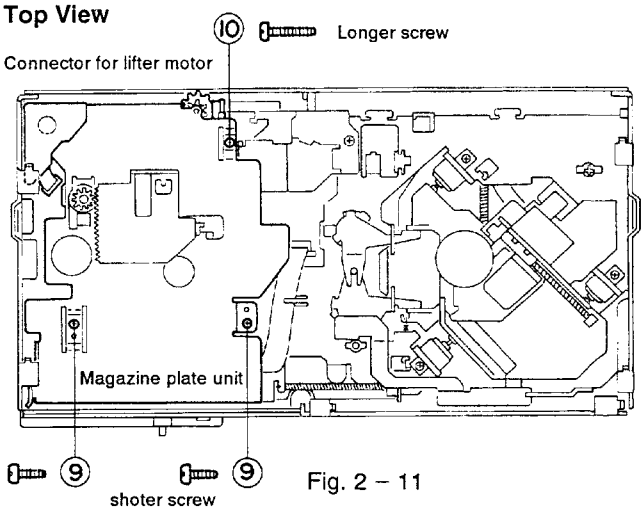

Fig. 2 – 11

Top View

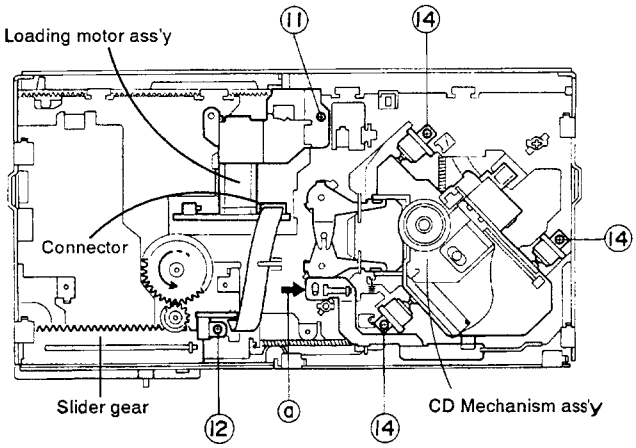

Fig. 2 – 12

Bottom View

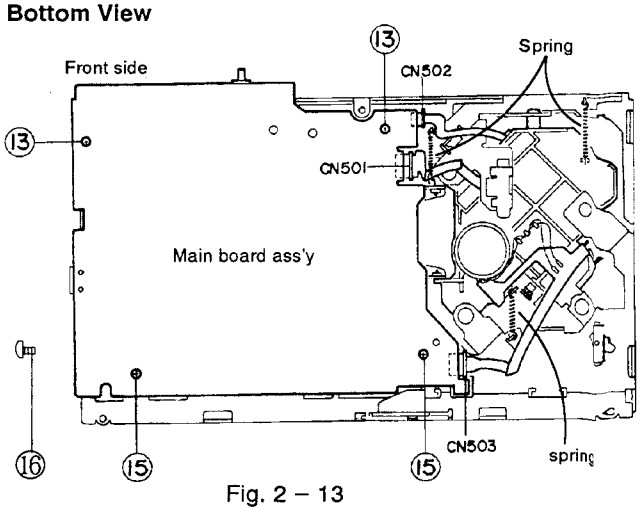

Fig. 2 – 13

www.manualscenter.com

■ Note When assembly

◆ Up/down gear position during chassis assembly

Install the up/down gear so that the 2 dent marks on the gear and a hole on the slider are aligned in line as shown in the Fig.2-14.

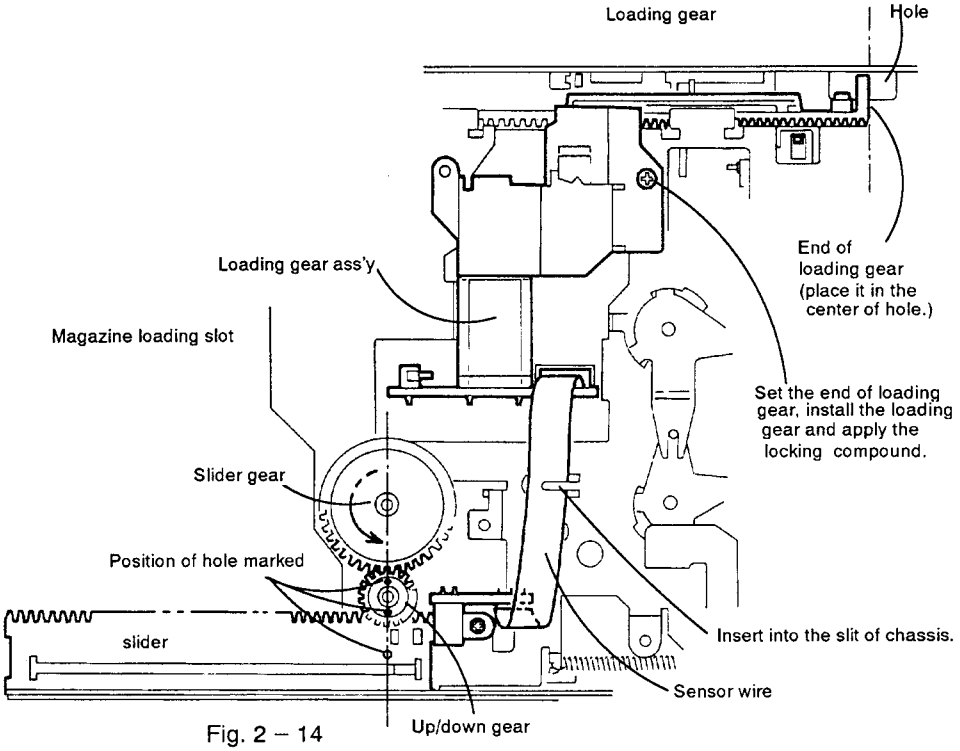

Fig. 2 – 14

◆ Gear position when assembling the magazine plate unit

1. Align the gear positions of magazine plate unit ass'y with each other and install the magagine plate unit in the chassis.
2. When installing the magagine plate unit ass'y, follow the instructions [1], [2], and [3] described in the Fig. 2 – 15.

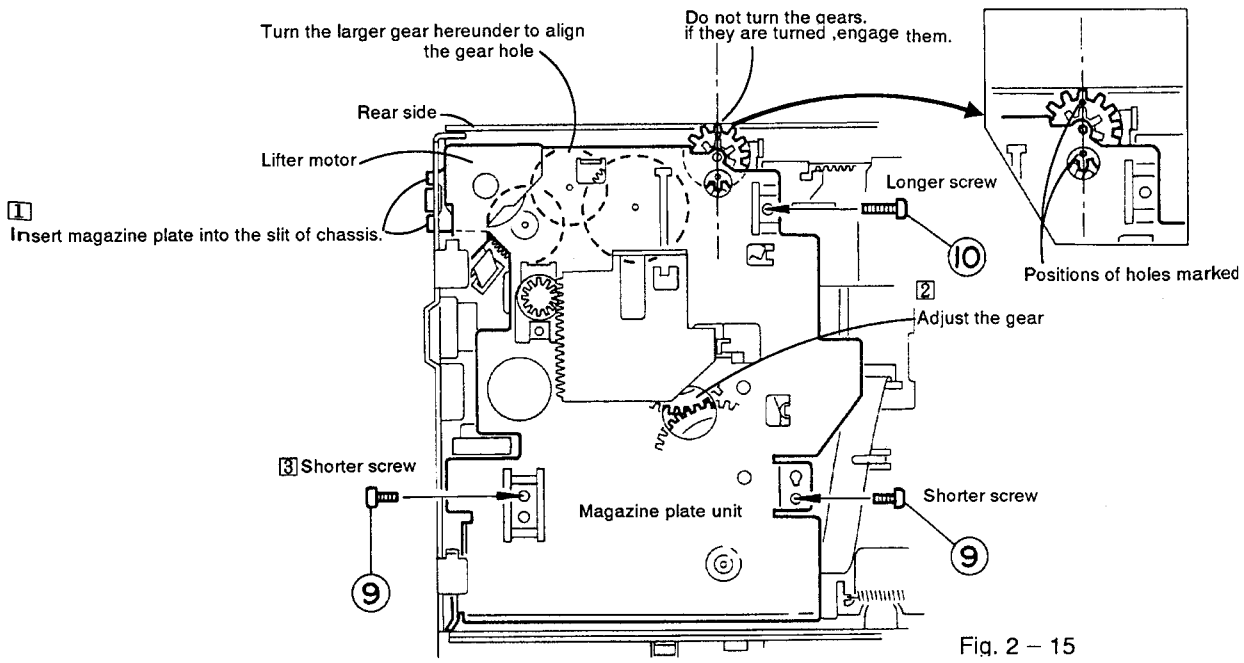

Fig. 2 – 15

www.manualscenter.com

◆CD Mechanism Ass'y

Procedure

1. Check that four suspension springs ㉜ and ㉝ are installed onto the CD mechanism chassis.
2. Check dampers' ㉚ installation and direction.
3. Press the flexible P.C.B. in the specified position.
4. Install section Ⓐ onto the chassis.
5. Set suspension spring Ⓒ in the chassis hole.
6. Assemble the CD mechanism unit while pressing section Ⓑ and set the remaining three suspensions according to the chassis guide.
7. Install the damper to the chassis.

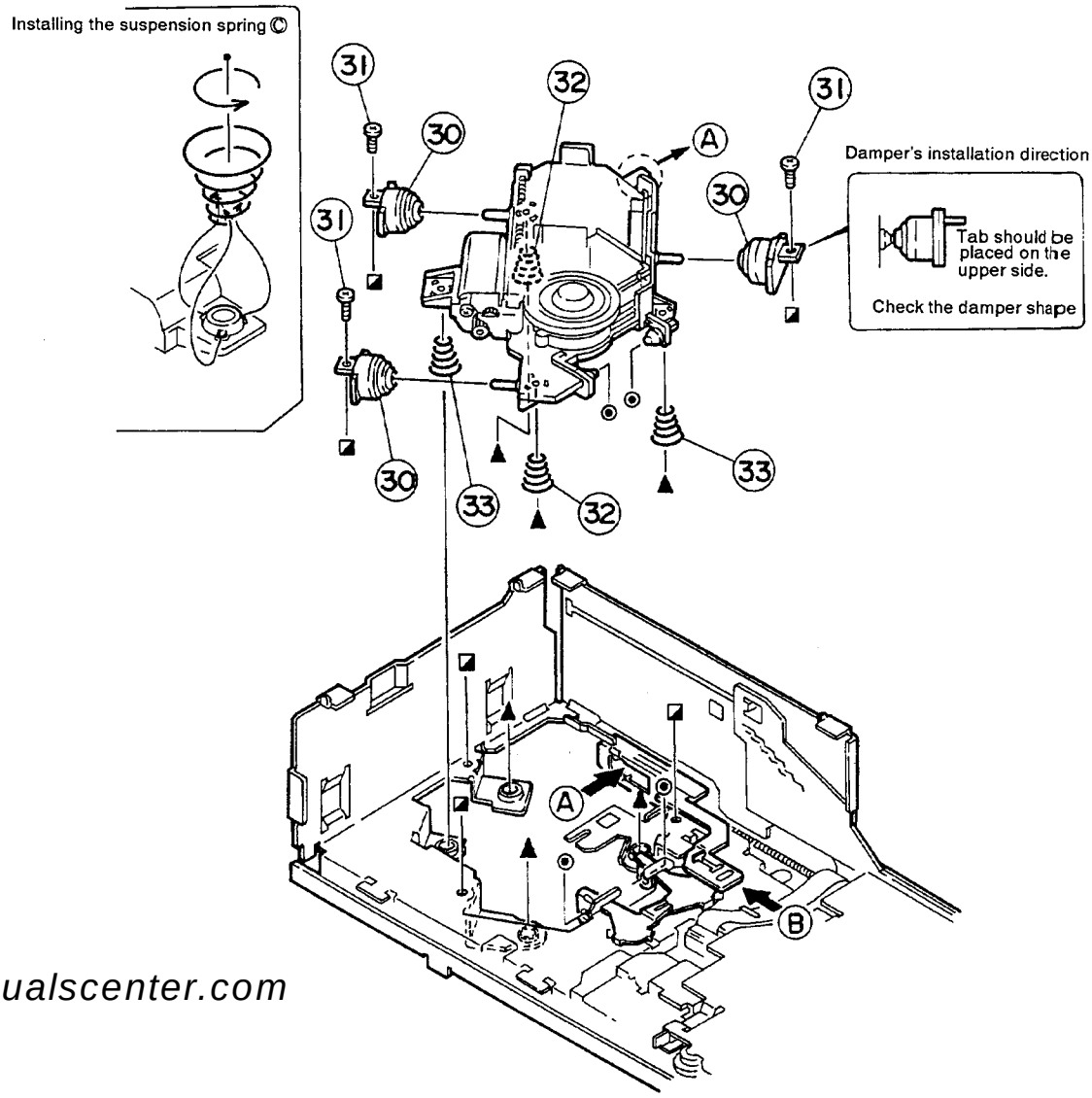

www.manualscenter.com

Fig. 2 – 16

◆ Installing the Lifter and Rear Panel

1. Check the gear position of magazine plate.
2. Press the lifter into the hook, then install the lifter's front side to the uppermost position.
3. Install the lifter sensor flexible wire onto the motor P.C.B.
4. Set the rear panel slider to the direction of arrow.
5. Use your finger to fix the rear panel ass'y slider.
6. Engage the lifter at the uppermost position of rear panel ass'y.
7. Install the rear panel and check that the end of slider gear and gear mark are aligned.

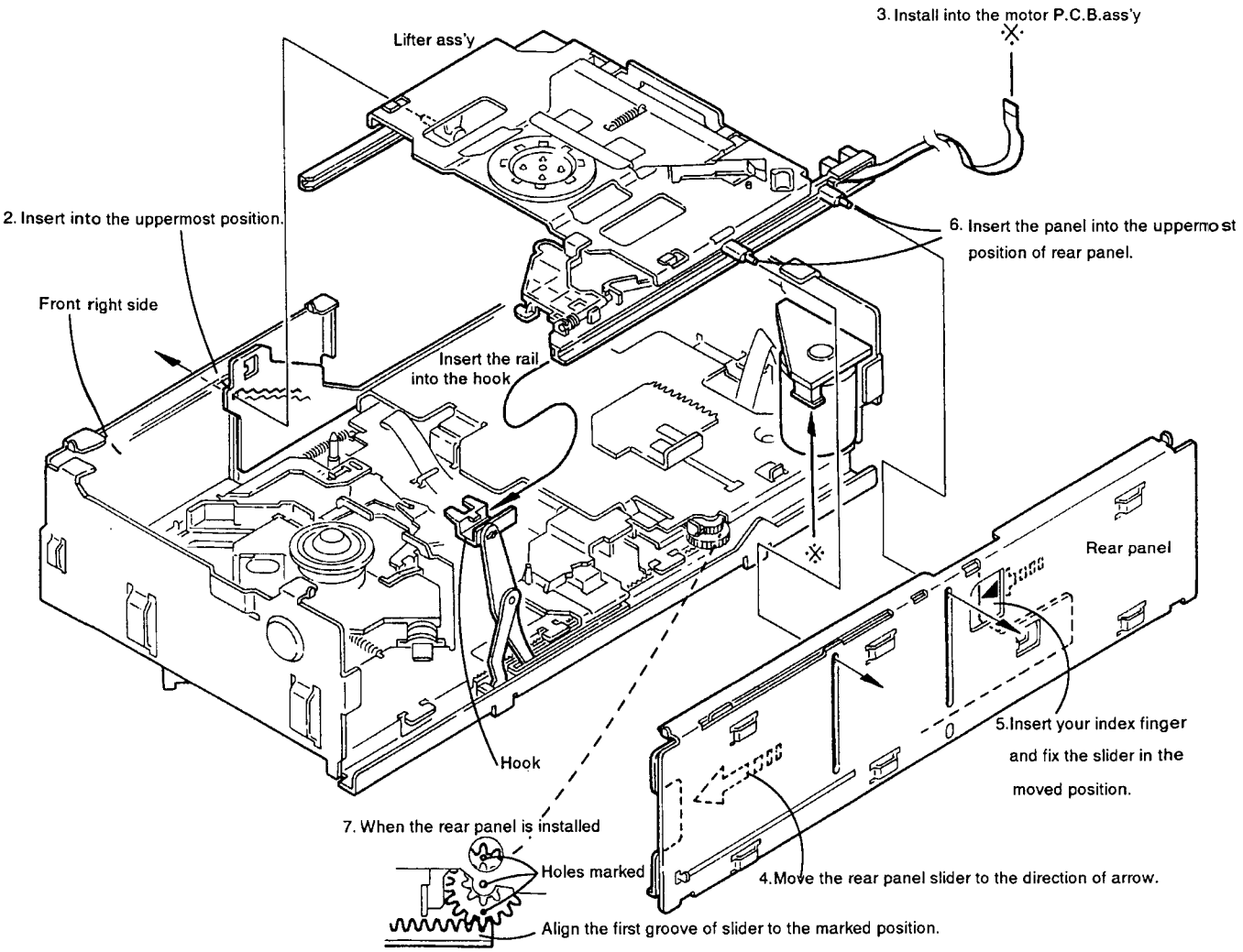

Fig. 2 – 17

www.manualscenter.com

3 Main adjustment

Main adjustment instruments

- Oscilloscope (Digital oscilloscope (100 MHz))
- Electronic voltage meter
- Digital test
- Tracking offset meter
- Pulse jitter meter

CD measuring disc

- Standard test disc : JVC CTS-1000
  or
  :CRG-1242

Adjustment position view

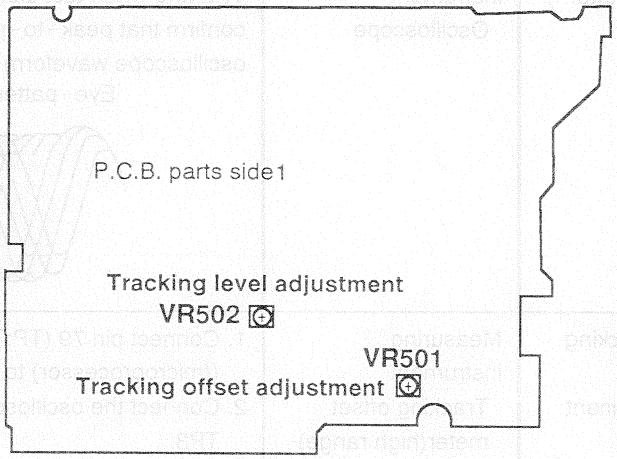

Fig. 3 – 1

P.C.B.test point view(pattern side)

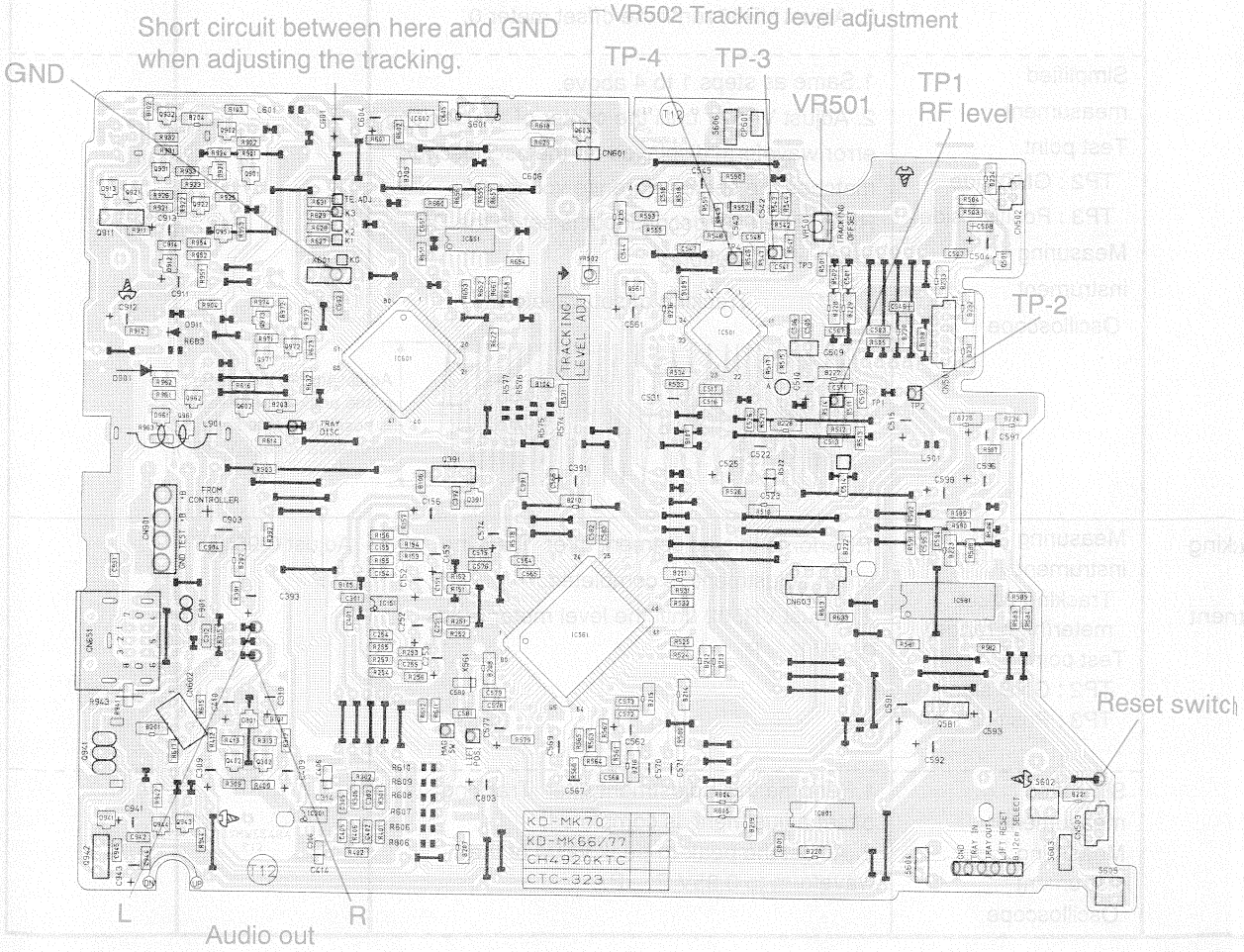

Fig. 3 – 2

www.manualscenter.com

Items	Conditions	Adjustment and Confirmation procedure	Standard Value	Adjusting
1. Jitter check	Measuring instrument Oscilloscope Test point TP1: Positive side TP2: GND side	Connect the jitter meter between TP1 and TP2 and when test disc (track 1) is played, confirm that the meter reading is 26n-sec or less.	26n-sec or less	
2. RF level (eye pattern) check	Measuring instrument Oscilloscope	Connect the oscilloscope between TP1 and TP2 and when test disc (track 1) is played, confirm that peak-to-peak value of oscilloscope waveform is within 1.2V +0.3V. Eye-pattern waveform 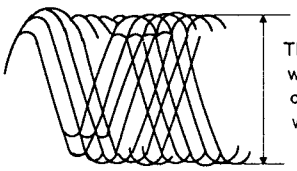 The maximum value of this waveform should be in the range of specifications and the waveform should be clear	within 1.2V +0.3V.	
3. Tracking offset adjustment	Measuring instrument Tracking offset meter(high range) Test point TP2 : GND side TP3 : Positive side	1. Connect pin 79 (TP:TE ADJ) of IC601 ((microprocessor) to the GND. 2. Connect the oscilloscope between TP2 and TP3. 3. Play test disc (track 1). 4. Short circuit between TP4 and TP2 during CD play. 5. Adjust VR501until the offset meter 0.	Offset meter 0	VR501
	Simplified measument Test point TP2 : GND side TP3 : Positive side Measuring instrument Oscilloscope	1.Same as steps 1 to 4 above. 2. Adjust VR501 until the center of the tracking error waveform displayed on the oscilloscope matches the servo reference voltage(V REF).(The oscilloscpe input is set to the DC measuring position.) Tracking offset waveform 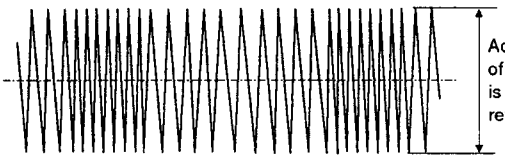 Adjust so that the center of the peak-to-peak value is positioned at te servo referrence voltage(V REF).		
4. Tracking level adjustment	Measuring instrument Tracking offset meter(high range) Test point TP2 : GND side TP3 : Positive side	1.Perfome this adjustment after Tracking offset adjustment is completed. 2. Adjust VR502 until the level meter reads 0.95V P – P.	Adjust 0.95VP – P	
	Simplified measument Measuring instrument Oscilloscope	1.Perfome this adjustment after Tracking offset adjustment is completed. 2. Adjust the peak-to-peak value of the waveform to 0.95V P – P.		

www.manualscenter.com

Items	Conditions	Adjustment and Confirmation	Standard Value	Adjusting
5. Play output level checking	Measuring equipment Electronic voltage meter	When test disc (track 1) is played, check that the output level is 1.45V +0.3V (with 20-kohm load).	1.45V ± 0.3V	
6. Outermost circumference		Directly access the outer circumference track 31, check that play is performed normally and that abnormalities including sound skipping do not occur.		
7. Operation checking from outer to inner circumference		Skip from the outer circumference track to track 1 and check the time until play starts. Normally it is less than 10 seconds.	Less than 10 seconds	

※Please note that VR502 is located on the sub board or the main board depending on the model.If it is located on the main board,use the dedicated alignment tool.

www.manualscenter.com

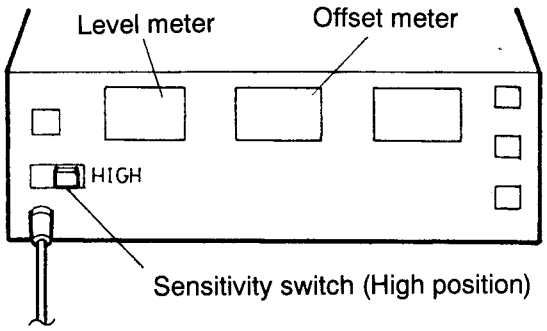

4 Troubleshooting chart of CD player section

■ Flowchart Readings of TOC (Table of Contents)

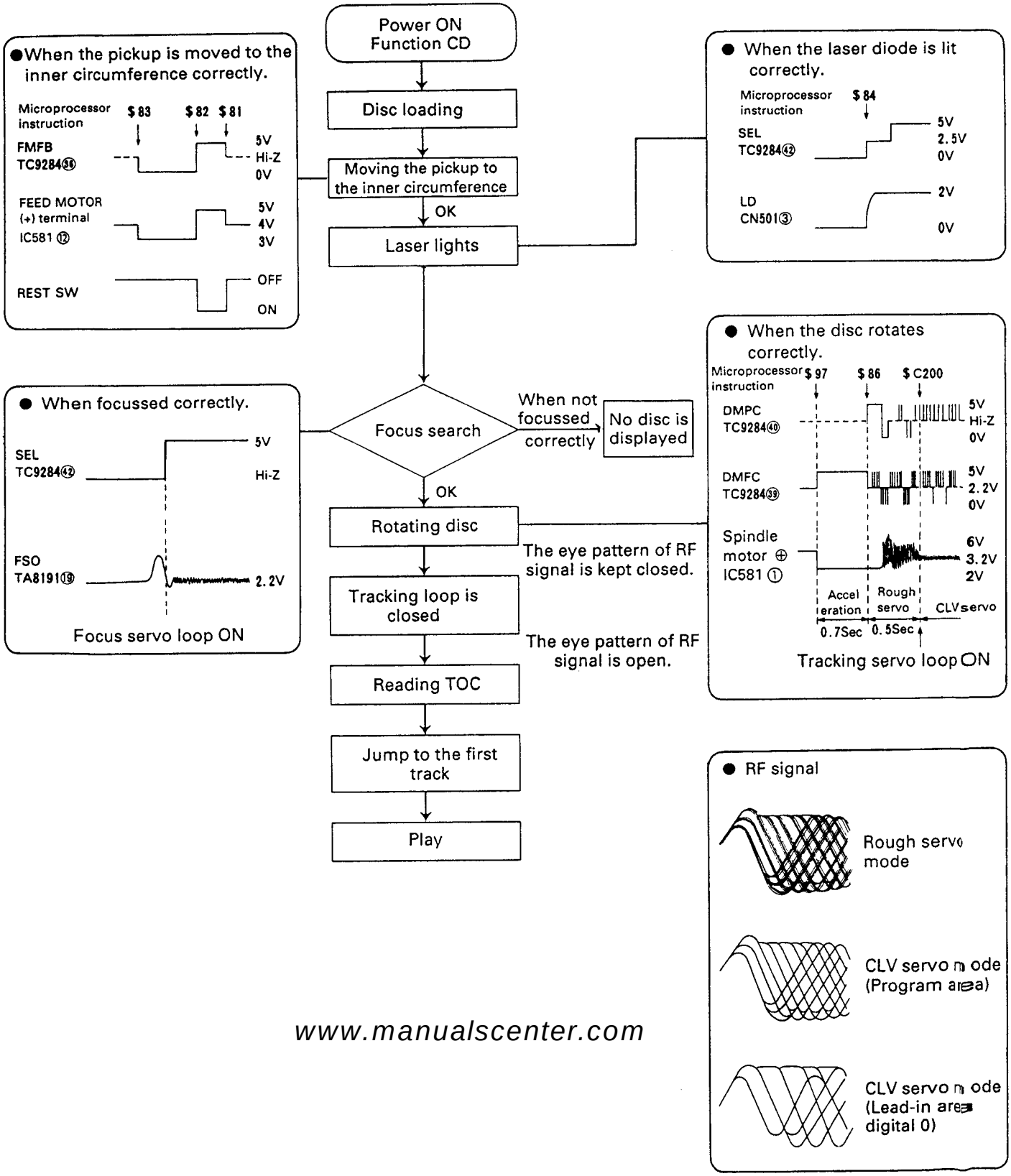

www.manualscenter.com

Fig. 4-1

■ General Section

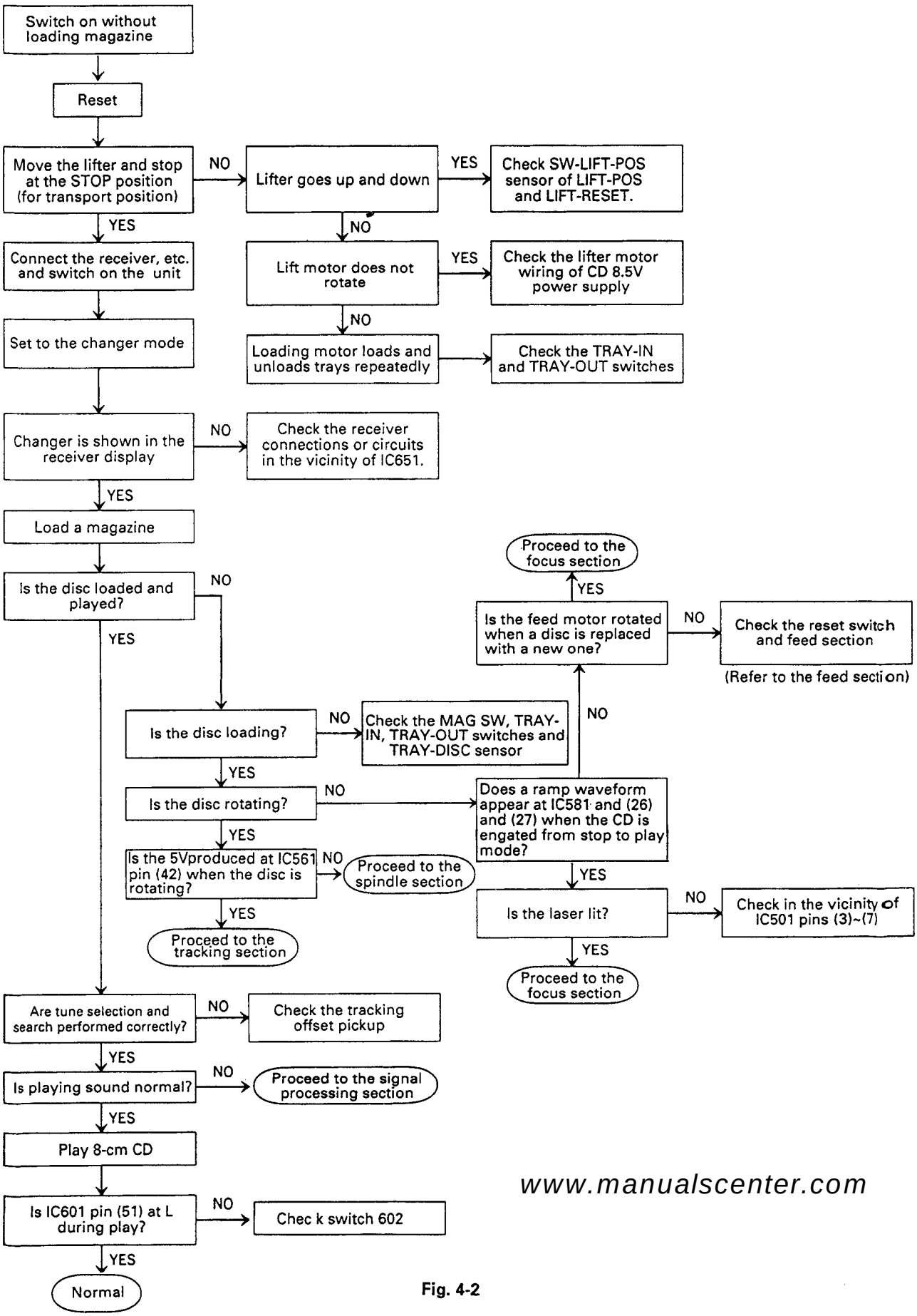

Fig. 4-2

www.manualscenter.com

■ Feed Section

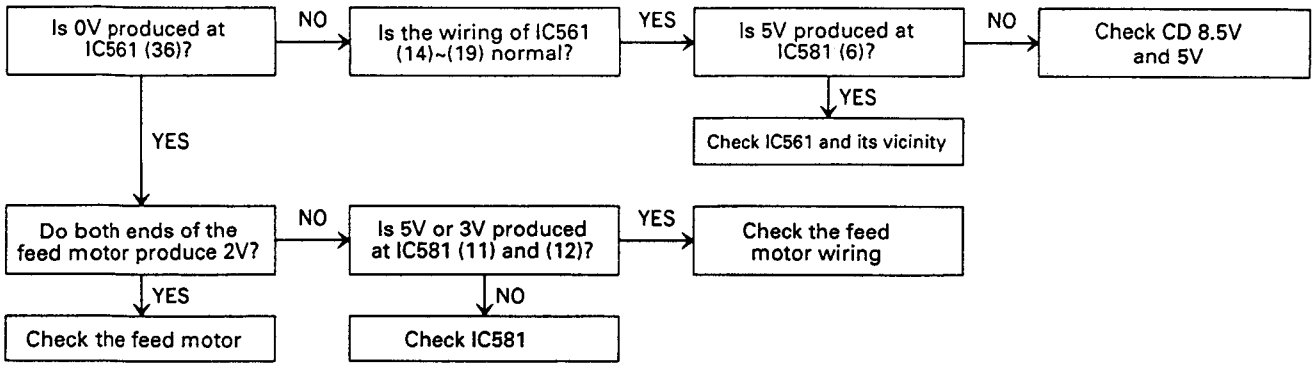

Fig. 4-3

■ Focus Section

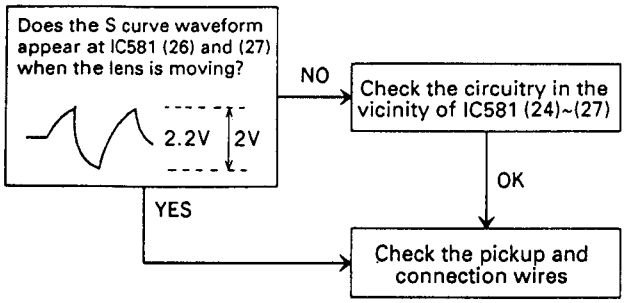

Fig. 4-4

■ Spindle Motor Section

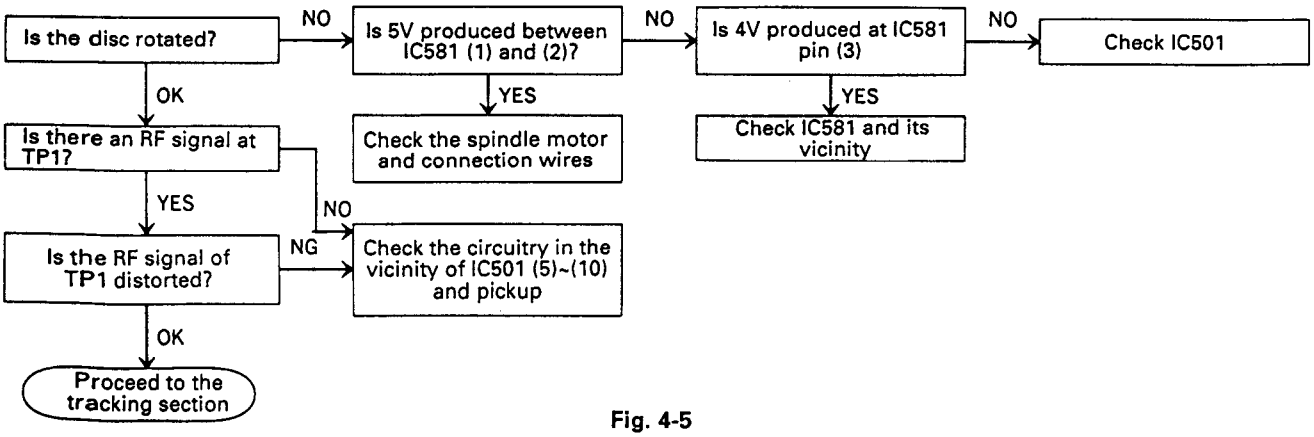

Fig. 4-5

■ Tracking Section

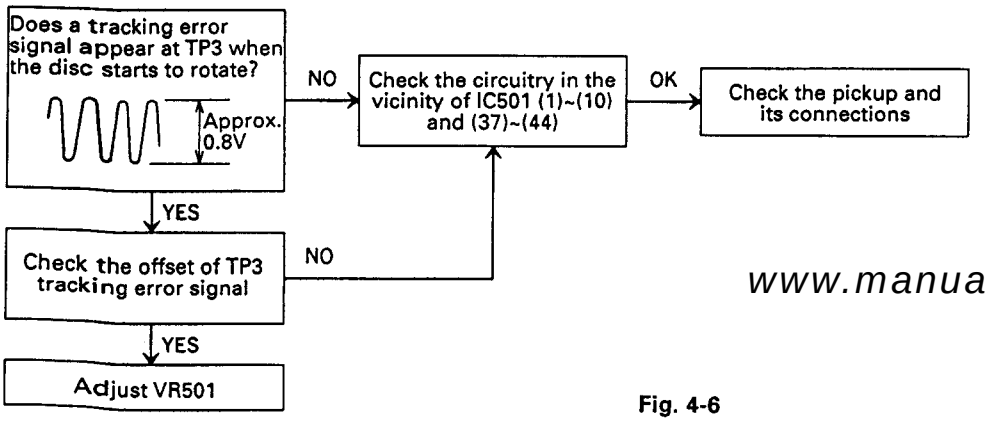

www.manualscenter.com

Fig. 4-6

■ Signal Processing Section

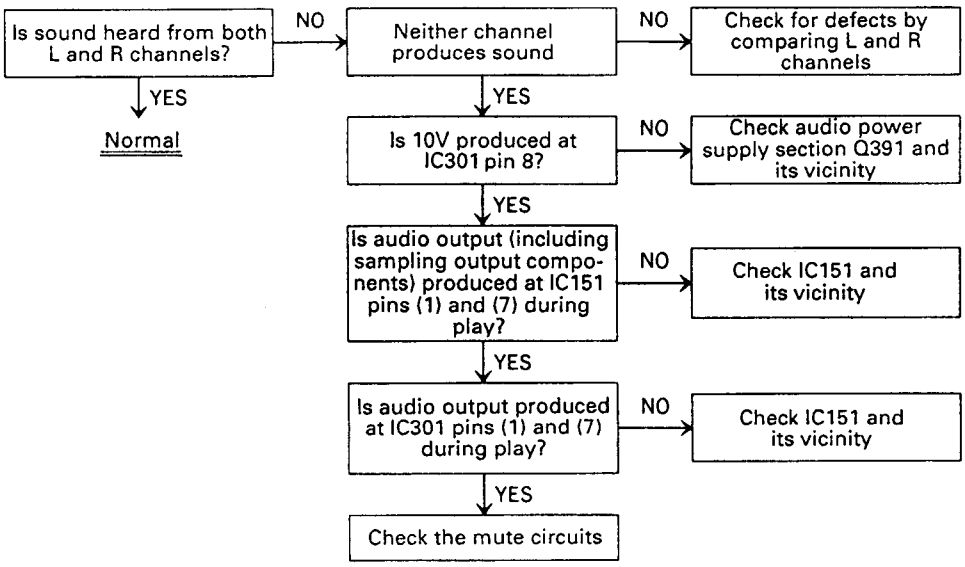

Fig. 4-7

www.manualscenter.com

KD-MK66 repair method for error indication

Error indication	Repair method
◆E1:Eject error	The magazine cannot be ejected until S701 (magazine SW) is turned off. Can the magazine be ejected? OK → ①, NG → ② ① Even when the magazine is ejected completely, magazine SW S701 is not turned off. ② Check if the magazine is caught by the mechanism.
◆E2:Lifter motor error	The lifter does not go up or down when changing a disc or ejecting the magazine. Does the lifter move after resetting? OK → ③, NG → ④ ③ When the lifter passes through the specified disc position, check the lift position input (IC601 pin 44 to Q701). When the lifter does not reach the specified disc position, check the mechanism (mainly the lifting mechanism). ④ Check if the drive voltage is applied to the motor terminal. If the voltage is applied, check the lifting mechanism. If not, separate the motor from the circuit and check again if the voltage is applied. When the voltage is applied, check that the lift motor' s armature resistance (resistance across the motor terminals) is about 12 ohms. If it is extremely low (1 to 2 ohms), the motor is defective.
◆E3:Tray motor error	Does the error occur when the disc is taken out from the magazine or when the disc is returned to the magazine? If it occurs when the disc is taken out, check if the MAG SW and TRAY OUT SW are set to ON. If it occurs when the disc is returned, check as follow.Does the mechanism operate to return? OK → ⑤ NG → ⑥,⑦ ⑤ Is a signal input to the TRAY IN input pin (IC601 pin 54)? (L when the tray is returned.) If no signal is input, check the pattern and MAG SW. If the tray stops in the middle, check the magazine. ⑥ When the lifter stops at the desired disc position, is the voltage applied to the tray motor terminal? When the voltage is applied, check the tray return mechanism, If not, check tray motor's armature resistance (about 20 ohms) the motor driver,and computer-controlled line. ⑦ When the lifter does not reach the desired disc position, check the TRAY and DISC sensors.
◆E4:Pickup return error	When ejecting, does the feed (pick up unit) return to the inner periphery? OK → ⑧ NG → ⑨,⑩ ⑧ Check the RESET SW. ⑨ If the feed gear turns, check the feed mechanism. ⑩ If the feed gear does not turn, check the motor driver and pattern.

Error that may occur in the receiver or the controller

◆E8:Connection error	If the CD changer mode does not become effective or the E8 error appears when the CD changer mode is selected using a function key, it indicates a communication error. (a) Check the cable connecting the CD changer with the receiver (CD changer controller). (b) Check the CD changer power cord and fuses (including F901 on the board). (c) Check IC651 and its peripheral circuits.

※E-1 to E-8, 1E1 to 1E8, R-1 to R-8, or RST1 to RST8 may be displayed on some models instead of the above E1 to E8 error codes.

www.manualscenter.com

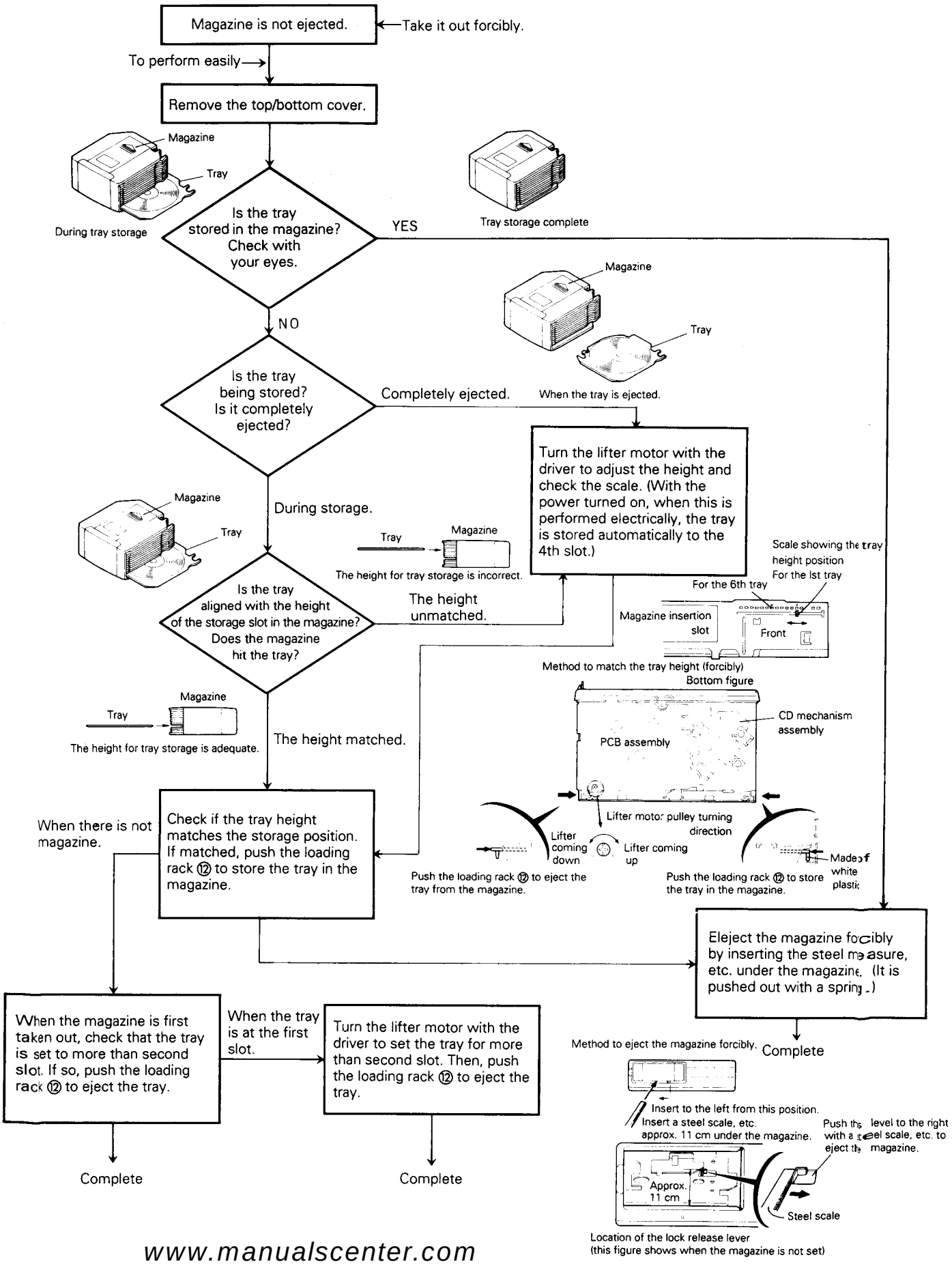

www.manualscenter.com

5 Descriptions of pin function

■ IC 601 UPD78052GC Microprocessor

Pin No.	Port names	I/O	Pin name	Descriptions	Connection to	Active
1	P15/ANI5	I		(Connect to GND)		
2	P16/ANI6	I		(Connect to GND)		
3	P17/ANI7	I		(Connect to GND)		
4	AVSS	–	GND	GND		
5	P130/AN00	I		(Connect to GND)		
6	P131/AN01	I		(Connect to GND)		
7	AVREF1	–	VCC	5V power supply		
8	P70/SI2/RXD	I		(Connect to GND)		
9	P71/SO2/TXD	I		(Connect to GND)		
10	P72/SCK2/ASCK	I		(Connect to GND)		
11	P20/SI1	I		(Connect to GND)		
12	P21/SO1	I		(Connect to GND)		
13	P22/SCK1	I		(Connect to GND)		
14	P23/STB	I		(Connect to GND)		
15	P24/BUSY	O	JB_I/O	JVC BUS in/output control (L: Input)	74HC126	
16	P25/SI0/SB0	I	JB_SI	JVC BUS data input	74HC126	
17	P26/SO0/SB1	O	JB_SO	JVC BUS data output	74HC126	
18	P27 /SCK0	I/O	JB_SCK	JVC BUS clock in/output	74HC126	
19	P40/AD0	I		(Connect to GND)		
20	P41/AD1	I		(Connect to GND)		
21	P42/AD2	I		(Connect to GND)		
22	P43/AD3	I		(Connect to GND)		
23	P44/AD4	I		(Connect to GND)		
24	P45/AD5	I		(Connect to GND)		
25	P46/AD6	I		(Connect to GND)		
26	P47/AD7	I		(Connect to GND)		
27	P50/A8	I	EJ_MODE	Eject mode (L: EJECT. Without switch)		
28	P51/A9	I	TEMP_DET	Temperature detection pin (L: High temperature)		
29	P52/A10	O	PWR_CONT	Power control		H
30	P53/A11	O	EJ_LED	Eject or power display		H
31	P54/A12	I		(Connect to GND)		
32	P55/A13	I		(Connect to GND)		
33	VSS	–	GND	GND		
34	P56/A14	O	BUCK	CD LSI data clock	TC9284	
35	P57/A15	O	CCE	CD LSI chip enable	TC9284	
36	P60	I/O	BUS3	CD LSI data 3 (Open drain output)	TC9284	
37	P61	I/O	BUS2	CD LSI data 2 (Open drain output)	TC9284	
38	P62	I/O	BUS1	CD LSI data 1 (Open drain output)	TC9284	
39	P63	I/O	BUS0	CD LSI data 0 (Open drain output)	TC9284	
40	P64/RD	O		(Open)		
41	P65/WR	O		(Open)		

Pin No.	Port names	I/O	Pin name	Descriptions	Connection to	Active
42	P66/WAIT	O	LSI_RESET	CD LSI reset	TC9284	L
43	P67/ASTB	O		(Open)		
44	P30/TO0	I	LIFT_POS	Lifter height detection sensor	Mechanism	
45	P31/TO1	I	MAG_SW	Magazine switch L: when loading	Mechanism	
46	P32/TO2	O	TRAY_M_1	Tray motor control	LB1831	
47	P33/TI1	O	TRAY_M_2	Tray motor control	LB1831	
48	P34/TI2	O	LIFT_M_2	Lift motor control	LB1831	
49	P36/PCL	O	LIFT_M_1	Lift motor control	LB1831	
50	P36/BUZ	I	REST_SW	Rest switch L: Home position	Mechanism	L
51	P37	I	8/12_SW	8-cm CD detection switch L: 8 cm	Mechanism	
52	P120/RTP0	I	LIFT_RES	Lifter reset switch	Mechanism	H
53	P121/RTP1	I	TRAY_OUT	Tray eject switch L: Ejection	Mechanism	L
54	P122/RTP2	I	TRAY_IN	Tray insertion switch L: Insertion completion	Mechanism	L
55	P123/RTP3	I	TRAY_DISC	Tray disc detection sensor	Mechanism	
56	P124/RTP4	O	_NATIVE	Native mode display (H: Native mode)		H
57	P125/RTP5	O	A_MUTE	Audio mute signal		L
58	P126/RTP6	O	MUTE_PWR	Power control for mute		H
59	P127/RTP7	O	CD_ON	CD power control H: ON		H
60	RESET	I	RESET	Reset input		L
61	P00/INTP0/T00	I	TEST_RUN	Test running pin (for line test)		L
62	P01/INTP1/T01	O	JB_BUSout	BUS output for JVC BUS		H
63	P02/INTP2	I	PWR_SW	CONT + B detection input		H
64	P03/INTP3	I	PWR_DET	Power voltage detection input		H
65	P04/INTP4	I	EJEC T_SW	Eject switch (When EJ mode is L, it can be also used as a DOOR SW)		L
66	P05/INTP5	I	DOOR_SW	Door switch		L
67	P06/INTP6	I	JB_INT	Interruption of JVC BUS communication	74HC126	H
68	VDD	–	VCC	5V power supply		
69	X2	O	X2	Oscillator (4.000 MHz)		
70	X1	I	X1	Oscillator (4.000 MHz)		
71	IC (VPP)	–	GND	GND		
72	XT2	O	XT2	(Open) * Set the subclock feedback resistor to off.		
73	XT1/P07	I	XT1	(Connect to GND)		
74	AVDD	–	VCC	5V power supply		
75	AVREF0	–	ON_B	5V power supply when power is switched on.		
76	P10/ANI0	I	KEY1	Key input 1 (A/D input) (for line test)		
77	P11/ANI1	I	KEY2	Key input 2 (A/D input) (for line test)		
78	P12/ANI2	I	KEY3	Key input 3 (A/D input) (for line test)		
79	P13/ANI3	I	TE_ADJ	For tracking adjustment. L: Q timer off		
80	P14/ANI4	I		(Connect to GND)		

www.manualscenter.com

■ Integrated circiut diagram

◆ IC561 (TC9284BF) Data processor

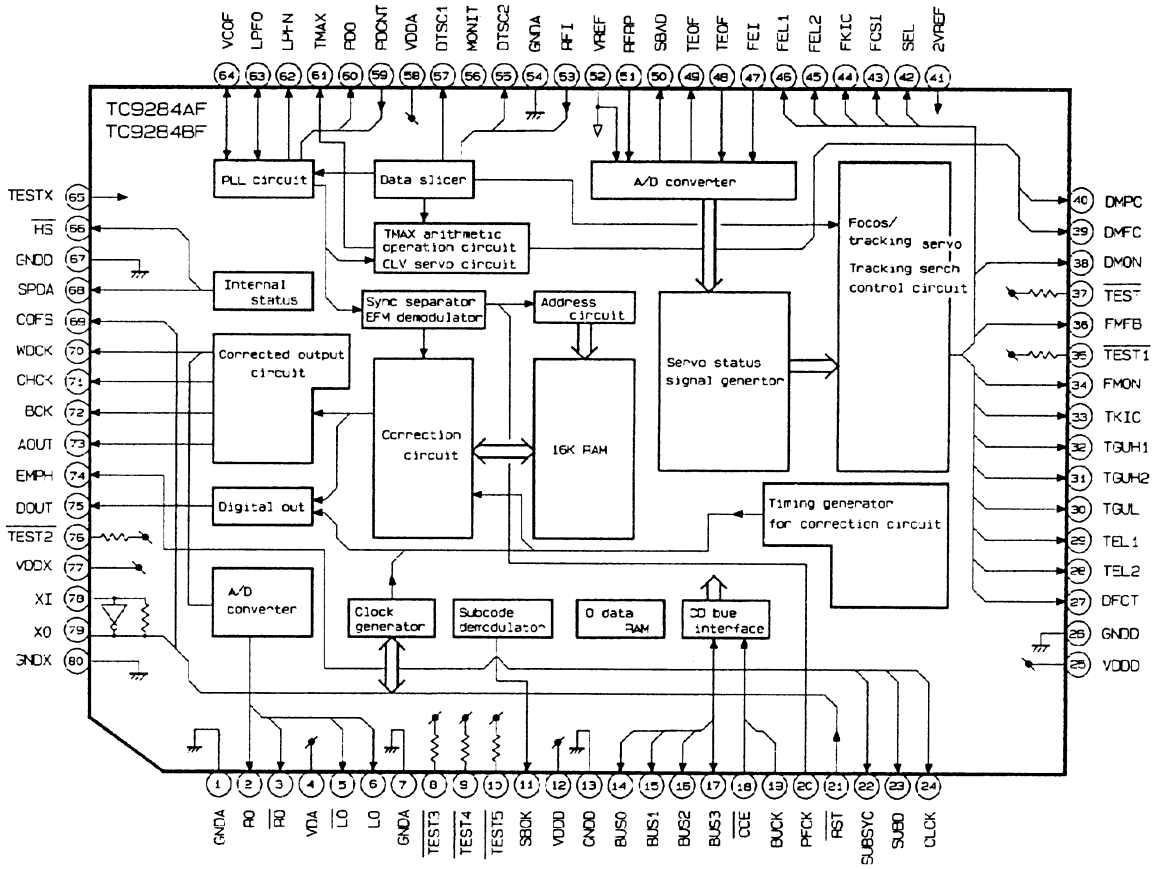

◆ IC501 (TA8191F) Servo amplifier

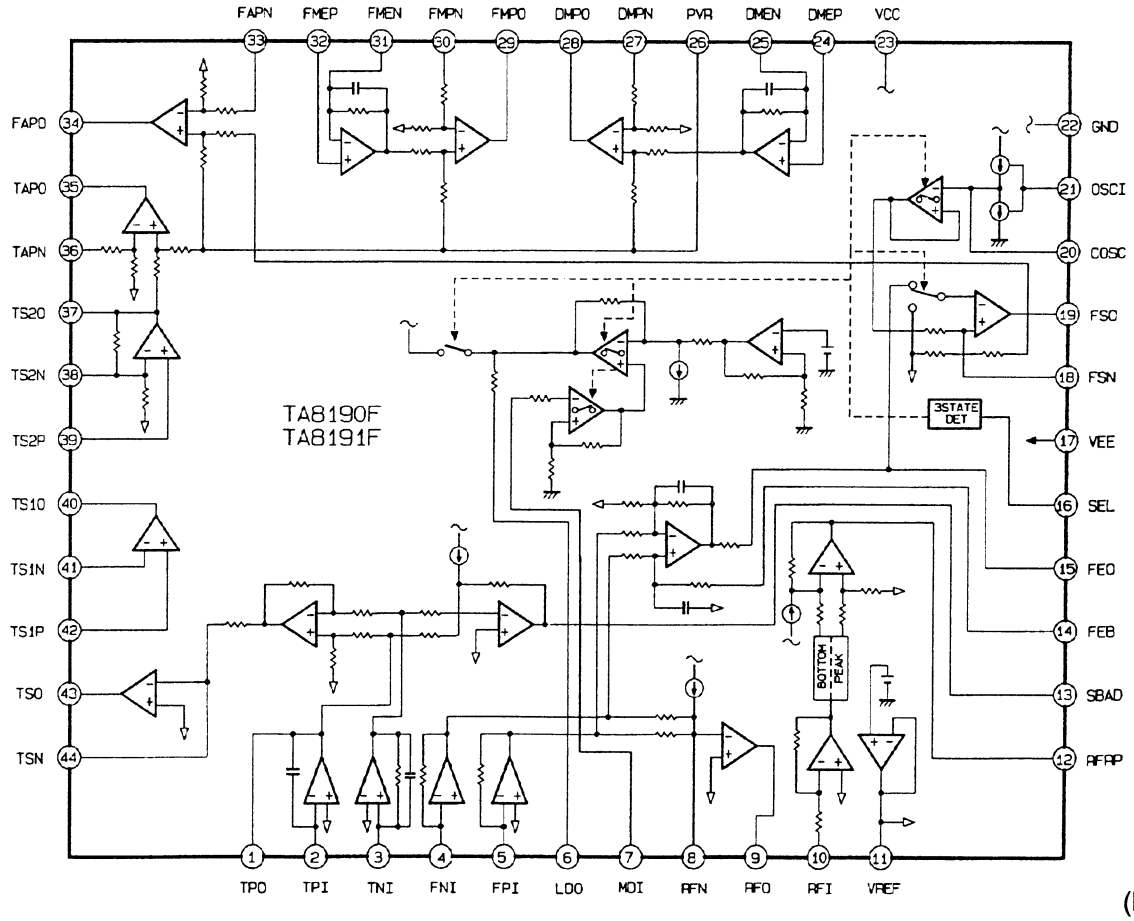

www.manualscenter.com

◆ IC581 (BA6790FP) Servo drive

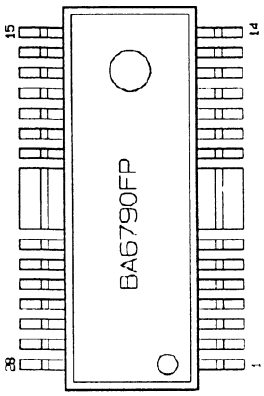

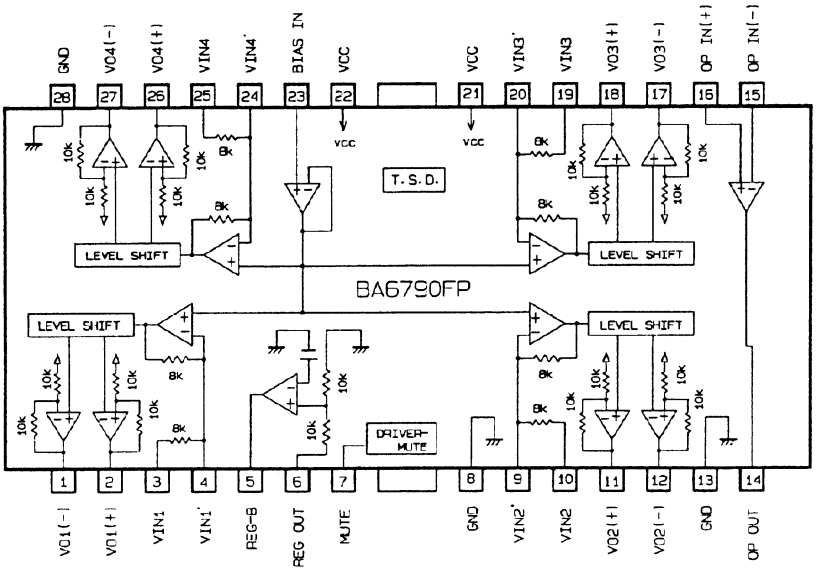

◆ IC151/IC301 (M5218AFP) Differencial amp,Bufferamp.

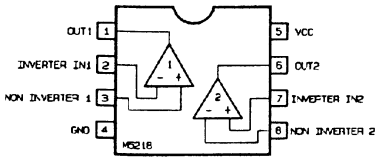

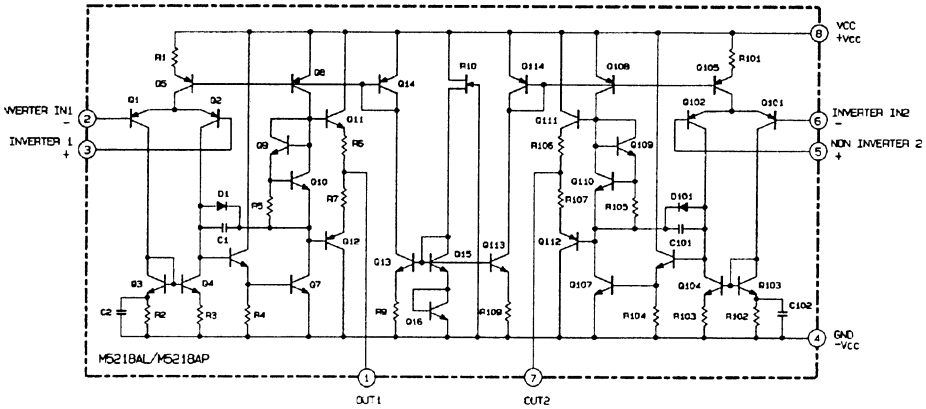

◆ IC801 (Lb1831M) Motor drive

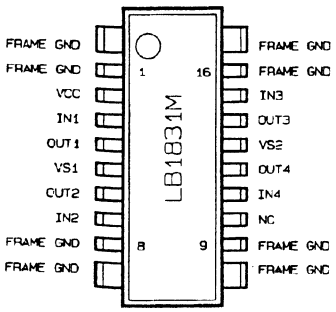

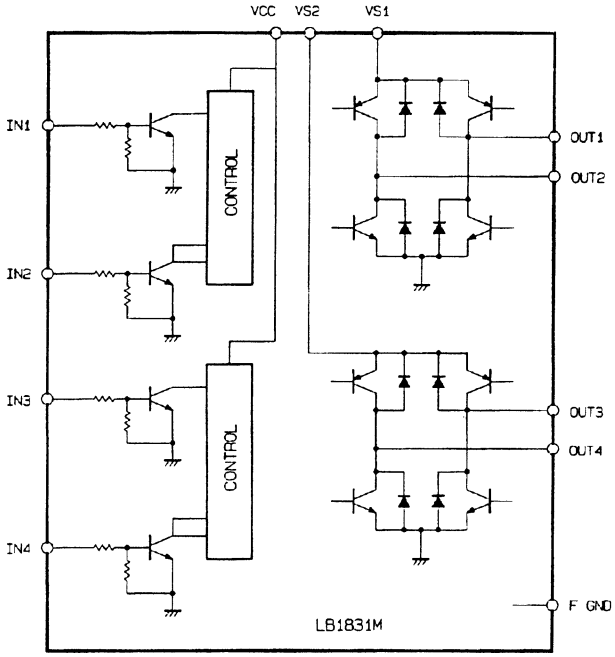

www.manualscenter.com

6 Block diagram

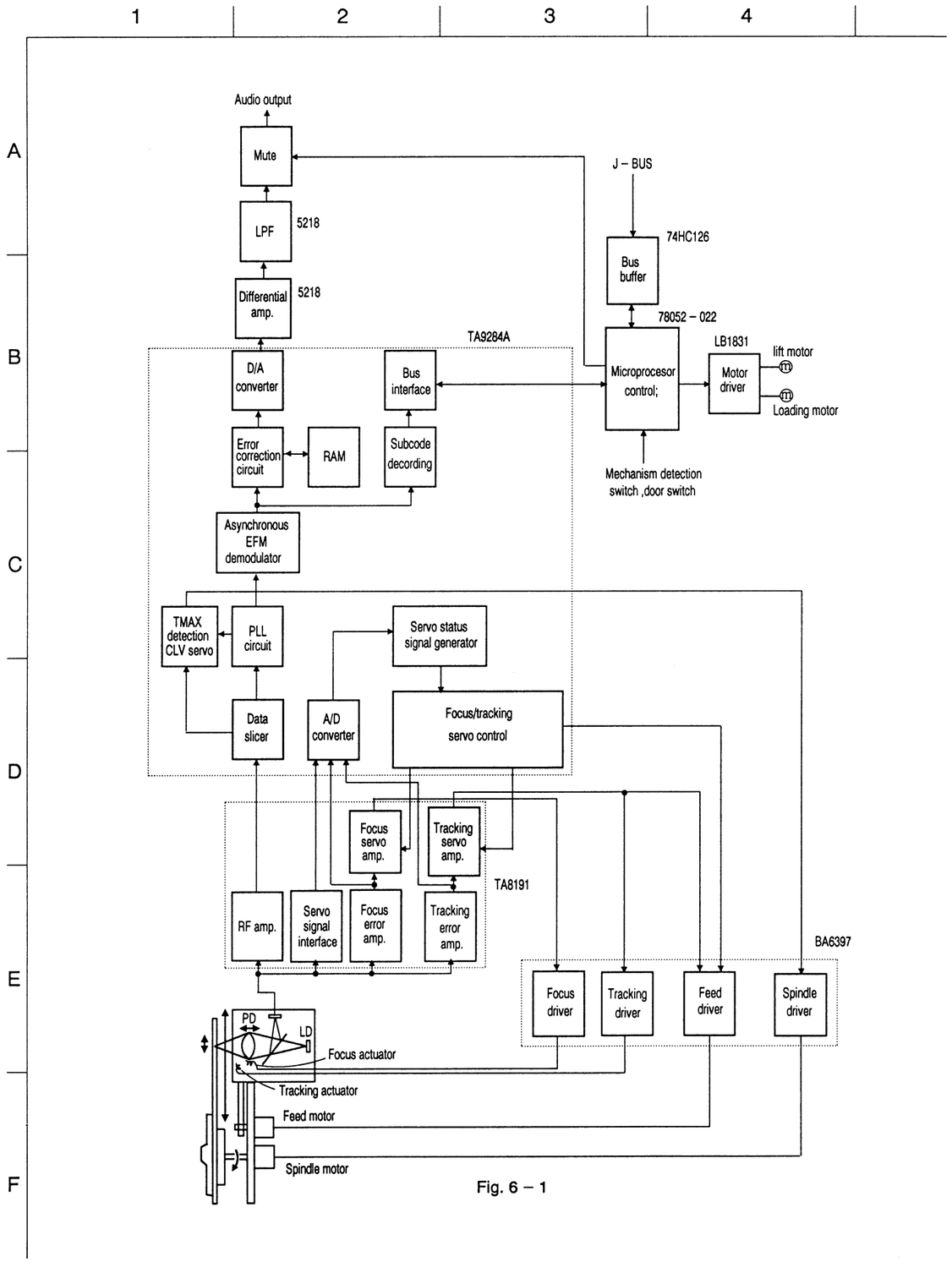

Fig. 6 – 1

7 Wiring connections

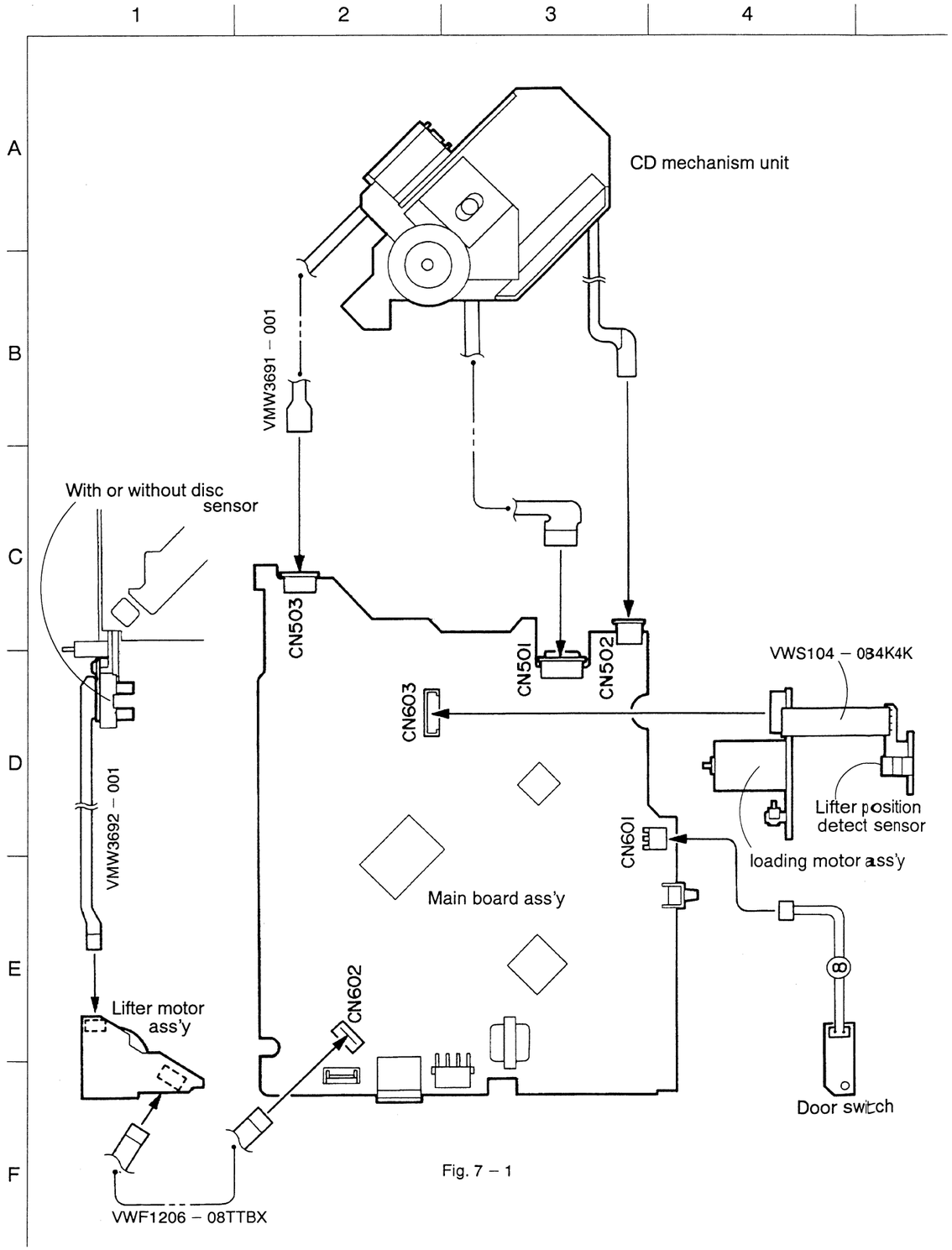

Fig. 7 – 1

www.manualscenter.com

8 Standard Schematic Diagram

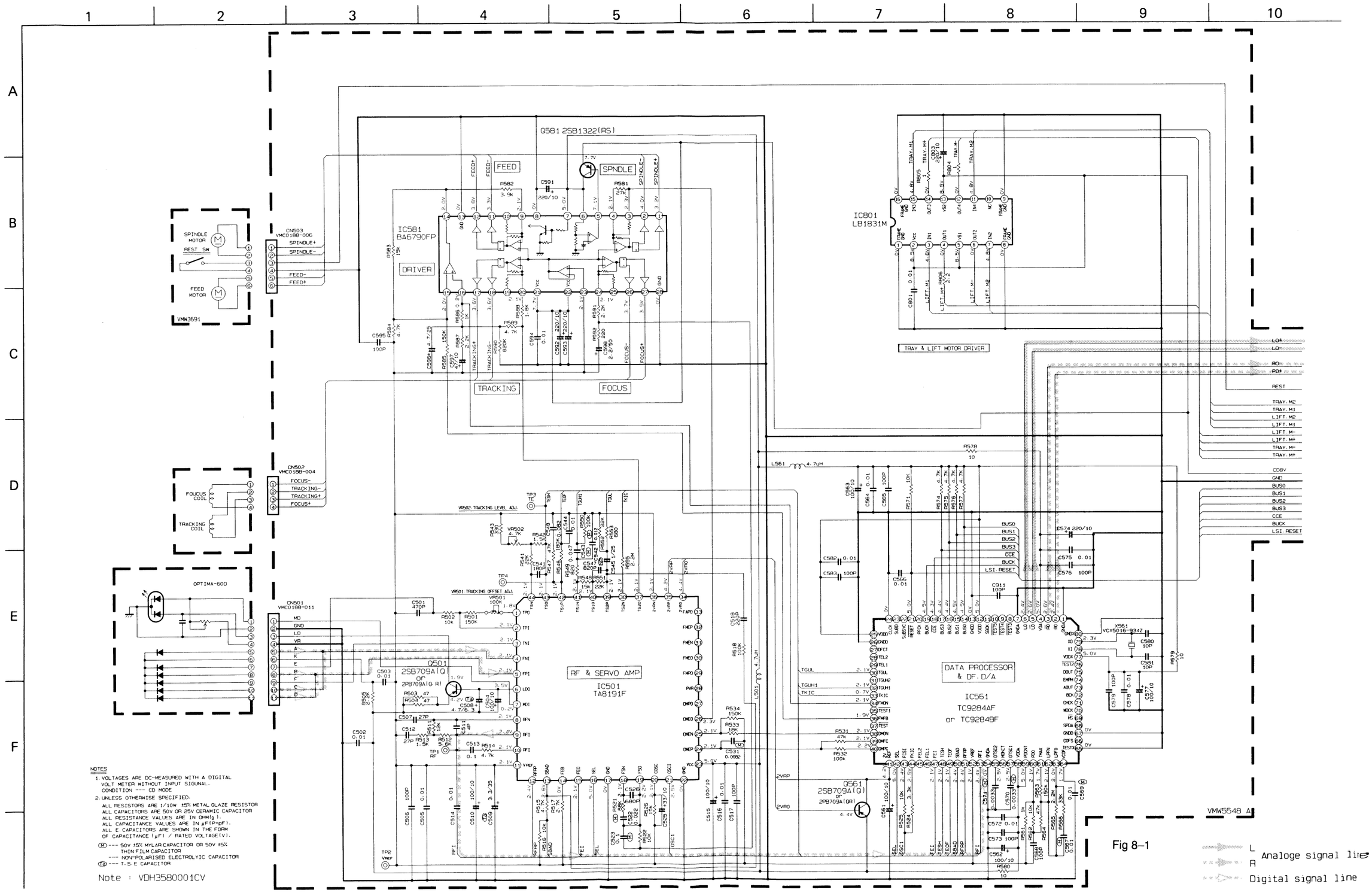

Fig 8–1

www.manualscenter.com

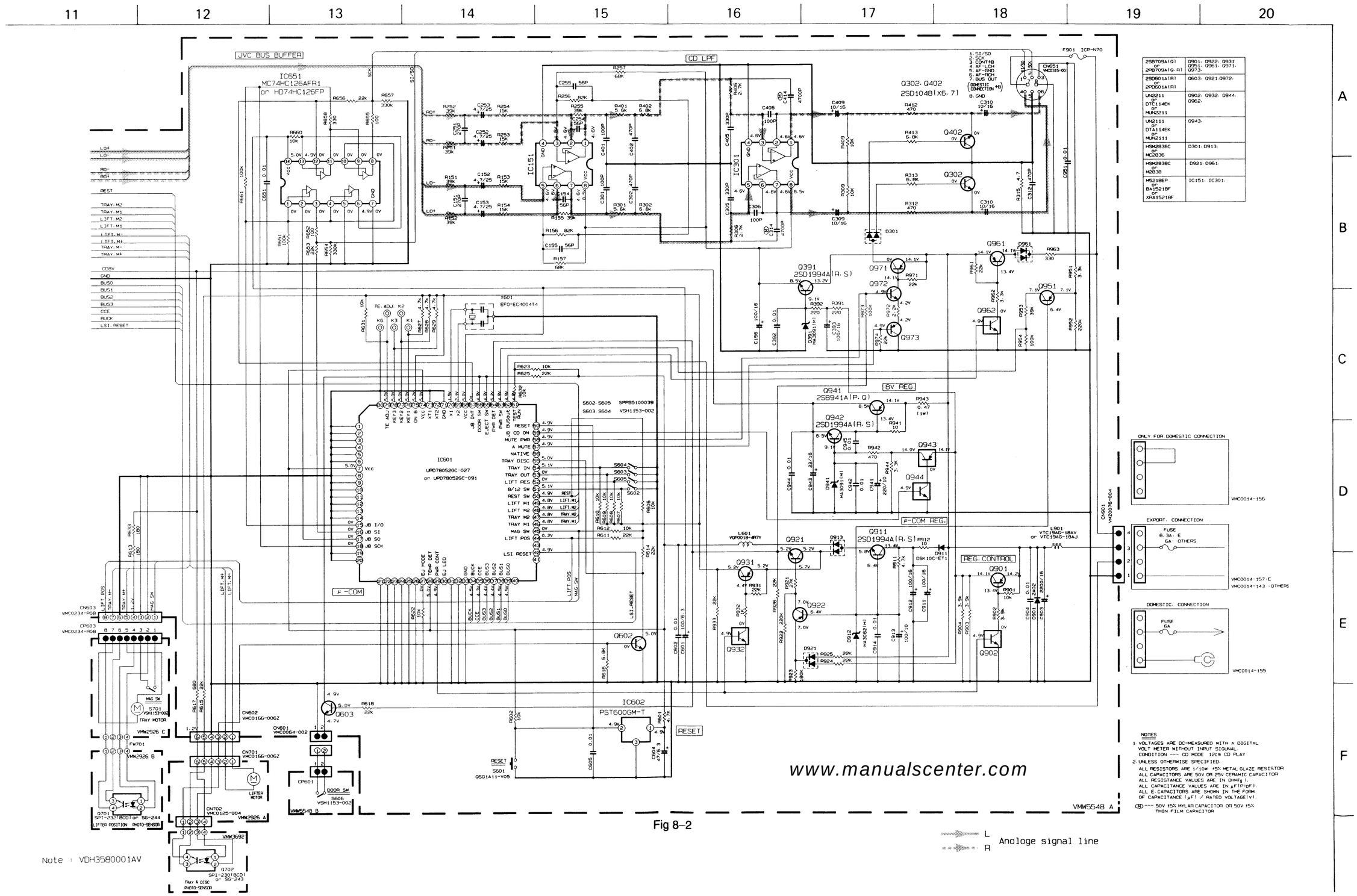

2SB709A(Q) or 2PB709A(Q, R)	Q901, Q922, Q931, Q951, Q961, Q971, Q973.
2SD601A(R) or 2PD601A(R)	Q603, Q921, Q972.
UN2211 or DTC114EK or MUN2211	Q902, Q932, Q944, Q962.
UN2111 or DTA114EK or MUN2111	Q943.
HSR2836C or MC2836	D301, D913.
HSR2838C or M2838	D921, D961.
M5218EP or BA15218F or XRA15218F	IC151, IC301.

NOTES

1. VOLTAGES ARE DC-MEASURED WITH A DIGITAL VOLT METER WITHOUT INPUT SIGNAL.
   CONDITION --- CD MODE : 12cm CD PLAY
2. UNLESS OTHERWISE SPECIFIED.
   ALL RESISTORS ARE 1/10W ±5% METAL GLAZE RESISTOR
   ALL CAPACITORS ARE 50V OR 25V CERAMIC CAPACITOR
   ALL RESISTANCE VALUES ARE IN OHM(Ω).
   ALL CAPACITANCE VALUES ARE IN μF(P=pF).
   ALL E-CAPACITORS ARE SHOWN IN THE FORM OF CAPACITANCE (μF) / RATED VOLTAGE(V).
   (M) --- 50V ±5% MYLAR CAPACITOR OR 50V ±5% THIN FILM CAPACITOR

Fig 8–2

L
R
Anologe signal line

Note : VDH3580001AV

9 Location of P.C.board parts

■ Main Board

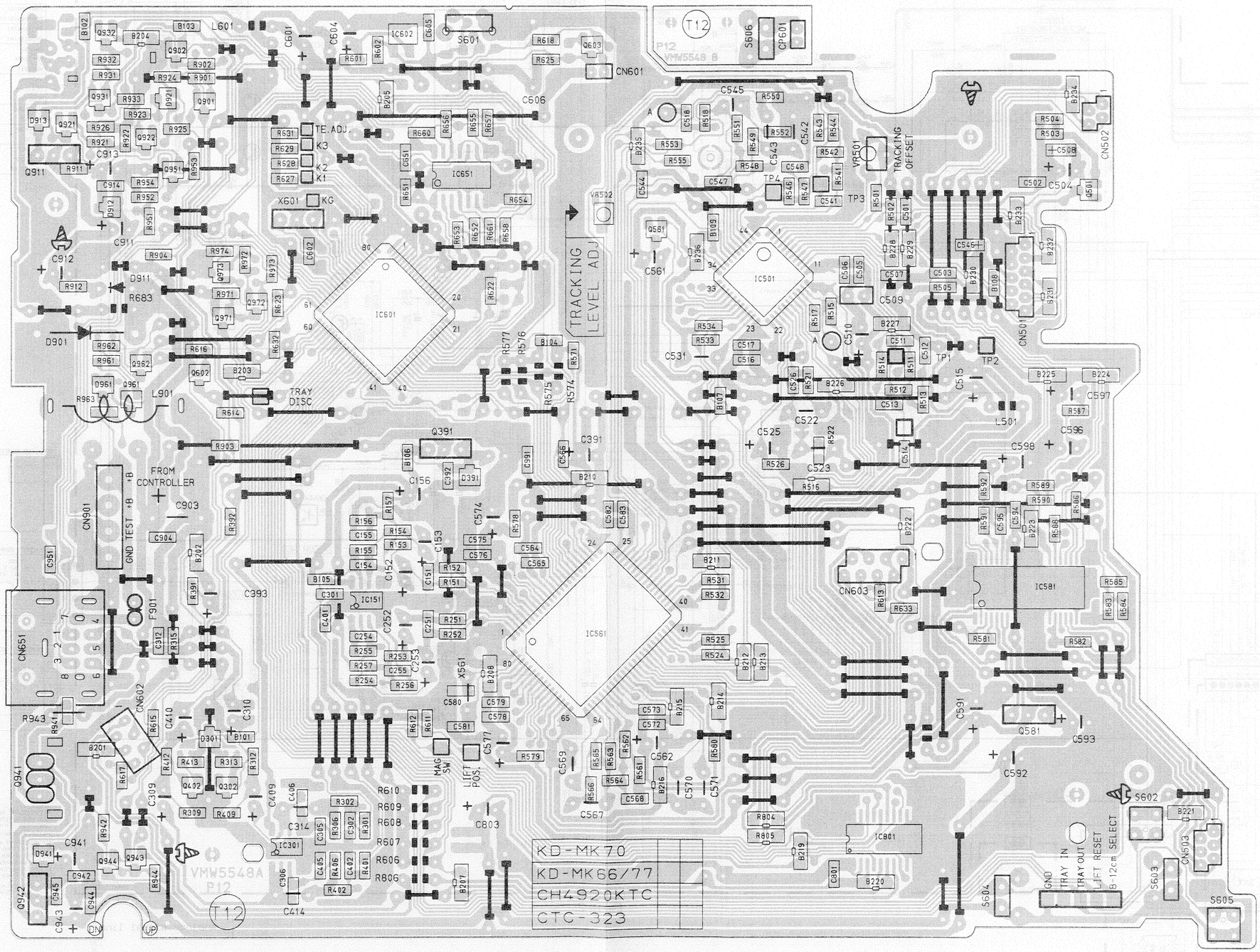

Fig 9–1

www.manualscenter.com

● P.C.Board parts list for main board

● Main board parts list

BLOCK NO. 01

⚠	REF.	PARTS NO.	PARTS NAME	REMARKS	SUFFIX
	B 101	NRSA02J-ORONY	MG RESISTOR	5% 1/10W	
	B 102	NRSA02J-ORONY	MG RESISTOR	5% 1/10W	
	B 103	NRSA02J-ORONY	MG RESISTOR	5% 1/10W	
	B 104	NRSA02J-ORONY	MG RESISTOR	5% 1/10W	
	B 105	NRSA02J-ORONY	MG RESISTOR	5% 1/10W	
	B 106	NRSA02J-ORONY	MG RESISTOR	5% 1/10W	
	B 107	NRSA02J-ORONY	MG RESISTOR	5% 1/10W	
	B 108	NRSA02J-ORONY	MG RESISTOR	5% 1/10W	
	B 109	NRSA02J-ORONY	MG RESISTOR	5% 1/10W	
	B 201	NRS181J-ORONY	MG RESISTOR	5% 1/8W	
	B 202	NRS181J-ORONY	MG RESISTOR	5% 1/8W	
	B 203	NRS181J-ORONY	MG RESISTOR	5% 1/8W	
	B 204	NRS181J-ORONY	MG RESISTOR	5% 1/8W	
	B 205	NRS181J-ORONY	MG RESISTOR	5% 1/8W	
	B 207	NRS181J-ORONY	MG RESISTOR	5% 1/8W	
	B 208	NRS181J-ORONY	MG RESISTOR	5% 1/8W	
	B 210	NRS181J-ORONY	MG RESISTOR	5% 1/8W	
	B 211	NRS181J-ORONY	MG RESISTOR	5% 1/8W	
	B 212	NRS181J-ORONY	MG RESISTOR	5% 1/8W	
	B 213	NRS181J-ORONY	MG RESISTOR	5% 1/8W	
	B 214	NRS181J-ORONY	MG RESISTOR	5% 1/8W	
	B 215	NRS181J-ORONY	MG RESISTOR	5% 1/8W	
	B 216	NRS181J-ORONY	MG RESISTOR	5% 1/8W	
	B 219	NRS181J-ORONY	MG RESISTOR	5% 1/8W	
	B 220	NRS181J-ORONY	MG RESISTOR	5% 1/8W	
	B 221	NRS181J-ORONY	MG RESISTOR	5% 1/8W	
	B 222	NRS181J-ORONY	MG RESISTOR	5% 1/8W	
	B 223	NRS181J-ORONY	MG RESISTOR	5% 1/8W	
	B 224	NRS181J-ORONY	MG RESISTOR	5% 1/8W	
	B 225	NRS181J-ORONY	MG RESISTOR	5% 1/8W	
	B 226	NRS181J-ORONY	MG RESISTOR	5% 1/8W	
	B 227	NRS181J-ORONY	MG RESISTOR	5% 1/8W	
	B 228	NRS181J-ORONY	MG RESISTOR	5% 1/8W	
	B 229	NRS181J-ORONY	MG RESISTOR	5% 1/8W	
	B 230	NRS181J-ORONY	MG RESISTOR	5% 1/8W	
	B 231	NRS181J-ORONY	MG RESISTOR	5% 1/8W	
	B 232	NRS181J-ORONY	MG RESISTOR	5% 1/8W	
	B 233	NRS181J-ORONY	MG RESISTOR	5% 1/8W	
	B 234	NRS181J-ORONY	MG RESISTOR	5% 1/8W	
	B 235	NRS181J-ORONY	MG RESISTOR	5% 1/8W	
	B 236	NRS181J-ORONY	MG RESISTOR	5% 1/8W	
	C 151	NCS21HJ-271AY	C CAPACITOR	270PF 5% 50V	
	C 152	QER41EM-475VM	E.CAPACITOR	4.7MF 20% 25V	
	C 153	QER41EM-475VM	E.CAPACITOR	4.7MF 20% 25V	
	C 154	NCS21HJ-560AY	C CAPACITOR	56PF 5% 50V	
	C 155	NCS21HJ-560AY	C CAPACITOR	56PF 5% 50V	
	C 156	QERF1CM-107ZM	E.CAPACITOR	100MF 20% 16V	
	C 251	NCS21HJ-271AY	C CAPACITOR	270PF 5% 50V	
	C 252	QER41EM-475VM	E.CAPACITOR	4.7MF 20% 25V	
	C 253	QER41EM-475VM	E.CAPACITOR	4.7MF 20% 25V	
	C 254	NCS21HJ-560AY	C CAPACITOR	56PF 5% 50V	
	C 255	NCS21HJ-560AY	C CAPACITOR	56PF 5% 50V	
	C 301	NCS21HJ-101AY	C CAPACITOR	100PF 5% 50V	
	C 302	NCS21HJ-471AY	C CAPACITOR	470PF 5% 50V	
	C 305	NCS21HJ-331AY	C CAPACITOR	330PF 5% 50V	

BLOCK NO. 01

⚠	REF.	PARTS NO.	PARTS NAME	REMARKS	SUFFIX
	C 306	NCS21HJ-101AY	C CAPACITOR	100PF 5% 50V	
	C 309	QER41CM-106	E.CAPACITOR	10MF 20% 16V	
	C 310	QER41CM-106	E.CAPACITOR	10MF 20% 16V	
	C 312	NCS21HJ-471AY	C CAPACITOR	470PF 5% 50V	
	C 314	QFLA1HJ-472ZM	M CAPASITOR	4700PF 5% 50V	
	C 392	NCB21HK-103AY	C CAPACITOR	.010MF 10% 50V	
	C 393	QERF1CM-107ZM	E.CAPACITOR	100MF 20% 16V	
	C 401	NCS21HJ-101AY	C CAPACITOR	100PF 5% 50V	
	C 402	NCS21HJ-471AY	C CAPACITOR	470PF 5% 50V	
	C 405	NCS21HJ-331AY	C CAPACITOR	330PF 5% 50V	
	C 406	NCS21HJ-101AY	C CAPACITOR	100PF 5% 50V	
	C 409	QER41CM-106	E.CAPACITOR	10MF 20% 16V	
	C 410	QER41CM-106	E.CAPACITOR	10MF 20% 16V	
	C 414	QFLA1HJ-472ZM	M CAPASITOR	4700PF 5% 50V	
	C 501	NCS21HJ-471AY	C CAPACITOR	470PF 5% 50V	
	C 502	NCB21HK-103AY	C CAPACITOR	.010MF 10% 50V	
	C 503	NCB21HK-103AY	C CAPACITOR	.010MF 10% 50V	
	C 504	QER41AM-107	E.CAPACITOR	100MF 20% 10V	
	C 505	NCB21HK-103AY	C CAPACITOR	.010MF 10% 50V	
	C 506	NCS21HJ-101AY	C CAPACITOR	100PF 5% 50V	
	C 507	NCS21HJ-270AY	C.CAPACITOR	SPINDLE REVERSE	
	C 508	NEF20JM-475RY	TS.E.CAPACITOR	4.7MF 20% 6.3V	
	C 509	QEE41VM-335B	TS.E.CAPACITOR	3.3MF 20% 35V	
	C 510	QER41AM-107	E.CAPACITOR	100MF 20% 10V	
	C 511	NCS21HC-4R0AY	C CAPACITOR	4.0PF 50V	
	C 512	NCT21CH-270AY	C CAPACITOR	27PF +50:-10% 1	
	C 513	NCB21HK-104	C CAPACITOR	.10MF 10% 25V	
	C 514	NCB21HK-103AY	C CAPACITOR	.010MF 10% 50V	
	C 515	QER41AM-107	E.CAPACITOR	100MF 20% 10V	
	C 516	NCB21HK-103AY	C CAPACITOR	.010MF 10% 50V	
	C 517	NCS21HJ-101AY	C CAPACITOR	100PF 5% 50V	
	C 518	NCS21HJ-221AY	C CAPACITOR	220PF 5% 50V	
	C 522	QFV81HJ-223	FILM CAPACITOR	.022MF 5% 50V	
	C 523	QFV41HJ-104ZM	FILM CAPACITOR	.10MF 5% 50V	
	C 525	QERF1AM-336ZN	E.CAPACITOR	33MF 20% 10V	
	C 526	NCS21HJ-681AY	C CAPACITOR	680PF 5% 50V	
	C 531	QFLA1HJ-822ZM	M.CAPACITOR	8200PF 5% 50V	
	C 541	NCS21HJ-181AY	C CAPACITOR	180PF 5% 50V	
	C 542	QFV41HJ-123ZM	FILM CAPACITOR	.012MF 5% 50V	
	C 543	QFV81HJ-473	FILM CAPACITOR	.047MF 5% 50V	
	C 544	NCB21HK-103AY	C CAPACITOR	.010MF 10% 50V	
	C 545	QEPJ1HM-105ZM	NP.E.CAPACITOR	1.0MF 20% 50V	
	C 547	NCS21HJ-821AY	C CAPACITOR	820PF 5% 50V	
	C 548	NCB21EK-823AY	C CAPACITOR	.082MF 10% 25V	
	C 561	QER41AM-107	E.CAPACITOR	100MF 20% 10V	
	C 562	QER41AM-107	E.CAPACITOR	100MF 20% 10V	
	C 563	QER41AM-107	E.CAPACITOR	100MF 20% 10V	
	C 564	NCB21HK-103AY	C CAPACITOR	.010MF 10% 50V	
	C 565	NCS21HJ-101AY	C CAPACITOR	100PF 5% 50V	
	C 566	NCB21HK-103AY	C CAPACITOR	.010MF 10% 50V	
	C 567	QFV71HJ-103	FILM CAPACITOR	.010MF 5% 50V	
	C 568	NCS21HJ-101AY	C CAPACITOR	100PF 5% 50V	
	C 569	QFV71HJ-103	FILM CAPACITOR	.010MF 5% 50V	
	C 570	QFLA1HJ-332ZM	M.CAPACITOR	3300PF 5% 50V	
	C 571	QFLA1HJ-332ZM	M.CAPACITOR	3300PF 5% 50V	

www.manualscenter.com

BLOCK NO. 01

⚠	REF.	PARTS NO.	PARTS NAME	REMARKS	SUFFIX
	C 572	NCB21HK-103AY	C CAPACITOR	.010MF 10% 50V	
	C 573	NCS21HJ-101AY	C CAPACITOR	100PF 5% 50V	
	C 574	QERF1AM-227ZM	E.CAPACITOR	220MF 20% 10V	
	C 575	NCB21HK-103AY	C CAPACITOR	.010MF 10% 50V	
	C 576	NCS21HJ-101AY	C CAPACITOR	100PF 5% 50V	
	C 577	QER41AM-107	E.CAPACITOR	100MF 20% 10V	
	C 578	NCB21HK-103AY	C CAPACITOR	.010MF 10% 50V	
	C 579	NCS21HJ-101AY	C CAPACITOR	100PF 5% 50V	
	C 580	NCS21HJ-100AY	C CAPACITOR	10PF 50V	
	C 581	NCS21HJ-100AY	C CAPACITOR	10PF 50V	
	C 582	NCB21HK-103AY	C CAPACITOR	.010MF 10% 50V	
	C 583	NCS21HJ-101AY	C CAPACITOR	100PF 5% 50V	
	C 591	QERF1AM-227ZM	E.CAPACITOR	220MF 20% 10V	
	C 592	QERF1AM-227ZM	E.CAPACITOR	220MF 20% 10V	
	C 593	QERF1AM-227ZM	E.CAPACITOR	220MF 20% 10V	
	C 594	NCB21HK-103AY	C CAPACITOR	.010MF 10% 50V	
	C 595	NCS21HJ-101AY	C CAPACITOR	100PF 5% 50V	
	C 596	QER41EM-475VM	E.CAPACITOR	4.7MF 20% 25V	
	C 597	QERF1AM-476ZN	E.CAPACITOR	47MF 20% 10V	
	C 598	QER41HM-225	E.CAPACITOR	2.2MF 20% 50V	
	C 601	QER40JM-107	E.CAPACITOR	100MF 20% 6.3V	
	C 602	NCB21HK-103AY	C CAPACITOR	.010MF 10% 50V	
	C 604	QERF0JM-476ZN	E.CAPACITOR	47MF 20% 6.3V	
	C 605	NCB21HK-103AY	C CAPACITOR	.010MF 10% 50V	
	C 651	NCB21HK-103AY	C CAPACITOR	.010MF 10% 50V	
	C 801	NCB21HK-103AY	C CAPACITOR	.010MF 10% 50V	
	C 803	QERF1AM-227ZM	E.CAPACITOR	220MF 20% 10V	
	C 903	QET41CR-228L16	E.CAPACITOR	2200MF +30:-10%	
	C 904	NCB21HK-103AY	C CAPACITOR	.010MF 10% 50V	
	C 911	QERF1CM-107ZM	E.CAPACITOR	100MF 20% 16V	
	C 912	QERF1CM-107ZM	E.CAPACITOR	100MF 20% 16V	
	C 913	QER41AM-107	E.CAPACITOR	100MF 20% 10V	
	C 914	NCB21HK-103AY	C CAPACITOR	.010MF 10% 50V	
	C 941	QERF1AM-227ZM	E.CAPACITOR	220MF 20% 10V	
	C 942	NCB21HK-103AY	C CAPACITOR	.010MF 10% 50V	
	C 943	QER41CM-226VM	E.CAPACITOR	22MF 20% 16V	
	C 944	NCB21HK-103AY	C CAPACITOR	.010MF 10% 50V	
	C 945	NCB21HK-103AY	C CAPACITOR	.010MF 10% 50V	
	C 951	NCB21HK-103AY	C CAPACITOR	.010MF 10% 50V	
	C 991	NCS21HJ-101AY	C CAPACITOR	100PF 5% 50V	
	CN501	VMC0188-011	CONNECTOR		
	CN502	VMC0188-004	CONNECTOR		
	CN503	VMC0188-006	CONNECTOR		
	CN601	VMC0064-002	CONNECTOR		
	CN602	VMC0163-006	CONNECTOR		
	CN603	VMC0234-P08	CONNECTOR		
	CN651	VMC0315-001	8P CONNECTOR		
	CN901	VMZ0076-004	CONNECTOR		
	CP601	VDM3511-001A	WIRE&TUBE		
	D 301	HSM2836C	DIODE		
	D 391	MA3091(M)	ZENER DIODE		
	D 901	2A02	DIODE		
	D 911	DSK10C-E	DIODE		
	D 912	MA3062(H)	ZENER DIODE		
	D 913	HSM2836C	DIODE		

BLOCK NO. 01

⚠	REF.	PARTS NO.	PARTS NAME	REMARKS	SUFFIX
	D 921	HSM2838C	DIODE		
	D 941	MA3091(M)	ZENER DIODE		
	D 961	HSM2838C	DIODE		
	F 901	ICP-N70	IC PROTECTER		
	IC151	M5218AFPT1	IC		
	IC301	M5218AFPT1	IC		
	IC501	TA8191F	IC		
	IC561	TC9284BF	IC		
	IC581	BA6790FP-T1	IC		
	IC601	UPD78052GC-027	IC	MICRPROCESSOR	
	IC602	PST600GM-T	IC		
	IC651	MC74HC126AFR1	IC		
	IC801	LB1831M-TPT1	IC		
	L 501	VQP0018-4R7	INDUCTOR		
	L 561	VQP0018-4R7	INDUCTOR		
	L 601	VQP0018-4R7	INDUCTOR		
	L 901	VTC19AG-18AJ	CHOKE COIL		
	Q 302	2SD1048X7T-HL	TRANSISTOR		
	Q 391	2SD1994A(R,S)TA	TRANSISTOR		
	Q 402	2SD1048X7T-HL	TRANSISTOR		
	Q 501	2SB709A(Q)	TRANSISTOR		
	Q 561	2SB709A(Q)	TRANSISTOR		
	Q 581	2SB1322(RS)	TRANSISTOR		
	Q 602	2SD601A(R)	TRANSISTOR		
	Q 603	2SD601A(R)	TRANSISTOR		
	Q 901	2SB709A(Q)	TRANSISTOR		
	Q 902	MUN2211T1	TRANSISTOR		
	Q 911	2SD1994A(R,S)TA	TRANSISTOR		
	Q 921	2SD601A(R)	TRANSISTOR		
	Q 922	2SB709A(Q)	TRANSISTOR		
	Q 931	2SB709A(Q)	TRANSISTOR		
	Q 932	MUN2211T1	TRANSISTOR		
	Q 941	2SB941A(P,Q)	TRANSISTOR		
	Q 942	2SD1994A(R,S)TA	TRANSISTOR		
	Q 943	MUN2111T1	TRANSISTOR		
	Q 944	MUN2211T1	TRANSISTOR		
	Q 951	2SB709A(Q)	TRANSISTOR		
	Q 961	2SB709A(Q)	TRANSISTOR		
	Q 962	MUN2211T1	TRANSISTOR		
	Q 971	2SB709A(Q)	TRANSISTOR		
	Q 972	2SD601A(R)	TRANSISTOR		
	Q 973	2SB709A(Q)	TRANSISTOR		
	R 151	NRSA02J-393NY	MG RESISTOR	39K 5% 1/10W	
	R 152	NRSA02J-393NY	MG RESISTOR	39K 5% 1/10W	
	R 153	NRSA02J-153NY	MG RESISTOR	15K 5% 1/10W	
	R 154	NRSA02J-153NY	MG RESISTOR	15K 5% 1/10W	
	R 155	NRSA02J-393NY	MG RESISTOR	39K 5% 1/10W	
	R 156	NRSA02J-823NY	MG RESISTOR	82K 5% 1/10W	
	R 157	NRSA02J-683NY	MG RESISTOR	68K 5% 1/10W	
	R 251	NRSA02J-393NY	MG RESISTOR	39K 5% 1/10W	
	R 252	NRSA02J-393NY	MG RESISTOR	39K 5% 1/10W	
	R 253	NRSA02J-153NY	MG RESISTOR	15K 5% 1/10W	
	R 254	NRSA02J-153NY	MG RESISTOR	15K 5% 1/10W	
	R 255	NRSA02J-393NY	MG RESISTOR	39K 5% 1/10W	
	R 256	NRSA02J-823NY	MG RESISTOR	82K 5% 1/10W	

www.manualscenter.com

BLOCK NO. 01

⚠	REF.	PARTS NO.	PARTS NAME	REMARKS	SUFFIX
	R 257	NRSA02J-683NY	MG RESISTOR	68K 5% 1/10W	
	R 301	NRSA02J-562NY	MG RESISTOR	5.6K 5% 1/10W	
	R 302	NRSA02J-682NY	MG RESISTOR	6.8K 5% 1/10W	
	R 306	NRSA02J-272NY	MG RESISTOR	2.7K 5% 1/10W	
	R 309	NRSA02J-103NY	MG RESISTOR	10K 5% 1/10W	
	R 312	NRSA02J-471NY	MG RESISTOR	470 5% 1/10W	
	R 313	NRSA02J-682NY	MG RESISTOR	6.8K 5% 1/10W	
	R 315	NRSA02J-4R7NY	MG RESISTOR	4.7 5% 1/10W	
	R 391	NRSA02J-221NY	MG RESISTOR	220 5% 1/10W	
	R 392	NRSA02J-221NY	MG RESISTOR	220 5% 1/10W	
	R 401	NRSA02J-562NY	MG RESISTOR	5.6K 5% 1/10W	
	R 402	NRSA02J-682NY	MG RESISTOR	6.8K 5% 1/10W	
	R 406	NRSA02J-272NY	MG RESISTOR	2.7K 5% 1/10W	
	R 409	NRSA02J-103NY	MG RESISTOR	10K 5% 1/10W	
	R 412	NRSA02J-471NY	MG RESISTOR	470 5% 1/10W	
	R 413	NRSA02J-682NY	MG RESISTOR	6.8K 5% 1/10W	
	R 501	NRSA02J-154NY	MG RESISTOR	150K 5% 1/10W	
	R 502	NRSA02J-103NY	MG RESISTOR	10K 5% 1/10W	
	R 503	NRSA02J-470NY	MG RESISTOR	47 5% 1/10W	
	R 504	NRSA02J-470NY	MG RESISTOR	47 5% 1/10W	
	R 505	NRSA02J-222NY	MG RESISTOR	2.2K 5% 1/10W	
	R 511	NRSA02J-123NY	MG RESISTOR	12K 5% 1/10W	
	R 512	NRSA02J-562NY	MG RESISTOR	5.6K 5% 1/10W	
	R 513	NRSA02J-152NY	MG RESISTOR	1.5K 5% 1/10W	
	R 514	NRSA02J-472NY	MG RESISTOR	4.7K 5% 1/10W	
	R 515	NRSA02J-472NY	MG RESISTOR	ｷｽﾞｵﾄﾄﾋﾞﾀｲｻｸ	
	R 516	NRS181J-103NY	MG RESISTOR	10K 5% 1/8W	
	R 517	NRSA02J-272NY	MG RESISTOR	2.7K 5% 1/10W	
	R 518	NRSA02J-104NY	MG RESISTOR	100K 5% 1/10W	
	R 521	NRSA02J-683NY	MG RESISTOR	68K 5% 1/10W	
	R 522	NRSA02J-103NY	MG RESISTOR	10K 5% 1/10W	
	R 524	NRSA02J-332NY	MG RESISTOR	3.3K 5% 1/10W	
	R 525	NRSA02J-103NY	MG RESISTOR	10K 5% 1/10W	
	R 526	NRSA02J-153NY	MG RESISTOR	15K 5% 1/10W	
	R 531	NRSA02J-473NY	MG RESISTOR	47K 5% 1/10W	
	R 532	NRSA02J-104NY	MG RESISTOR	100K 5% 1/10W	
	R 533	NRSA02J-183NY	MG RESISTOR	18K 5% 1/10W	
	R 534	NRSA02J-154NY	MG RESISTOR	150K 5% 1/10W	
	R 541	NRSA02J-223NY	MG RESISTOR	22K 5% 1/10W	
	R 542	NRSA02J-152NY	MG RESISTOR	1.5K 5% 1/10W	
	R 543	NRSA02J-331NY	MG RESISTOR	330 5% 1/10W	
	R 546	NRSA02J-184NY	MG RESISTOR	NEW PICUP(60D9	
	R 547	NRSA02J-473NY	MG RESISTOR	47K 5% 1/10W	
	R 548	NRSA02J-153NY	MG RESISTOR	15K 5% 1/10W	
	R 549	NRSA02J-821NY	MG RESISTOR	820 5% 1/10W	
	R 550	NRSA02J-104NY	MG RESISTOR	100K 5% 1/10W	
	R 551	NRSA02J-223NY	MG RESISTOR	22K 5% 1/10W	
	R 552	NRSA02J-223NY	MG RESISTOR	22K 5% 1/10W	
	R 553	NRSA02J-681NY	MG RESISTOR	680 5% 1/10W	
	R 555	NRSA02J-225NY	MG RESISTOR	2.2M 5% 1/10W	
	R 561	NRSA02J-102NY	MG RESISTOR	1.0K 5% 1/10W	
	R 562	NRSA02J-103NY	MG RESISTOR	10K 5% 1/10W	
	R 563	NRSA02J-154NY	MG RESISTOR	150K 5% 1/10W	
	R 564	NRSA02J-473NY	MG RESISTOR	47K 5% 1/10W	
	R 565	NRSA02J-225NY	MG RESISTOR	2.2M 5% 1/10W	

BLOCK NO. 01

⚠	REF.	PARTS NO.	PARTS NAME	REMARKS	SUFFIX
	R 566	NRSA02J-333NY	MG RESISTOR	33K 5% 1/10W	
	R 571	NRSA02J-103NY	MG RESISTOR	10K 5% 1/10W	
	R 574	QRD161J-472	CARBON RESISTOR	4.7K 5% 1/6W	
	R 575	QRD161J-472	CARBON RESISTOR	4.7K 5% 1/6W	
	R 576	QRD161J-472	CARBON RESISTOR	4.7K 5% 1/6W	
	R 577	QRD161J-472	CARBON RESISTOR	4.7K 5% 1/6W	
	R 578	NRSA02J-100NY	MG RESISTOR	10 5% 1/10W	
	R 579	NRSA02J-100NY	MG RESISTOR	10 5% 1/10W	
	R 580	NRSA02J-100NY	MG RESISTOR	10 5% 1/10W	
	R 581	NRSA02J-273NY	MG RESISTOR	27K 5% 1/10W	
	R 582	NRSA02J-392NY	MG RESISTOR	3.9K 5% 1/10W	
	R 583	NRSA02J-153NY	MG RESISTOR	15K 5% 1/10W	
	R 584	NRSA02J-472NY	MG RESISTOR	4.7K 5% 1/10W	
	R 585	NRSA02J-154NY	MG RESISTOR	150K 5% 1/10W	
	R 586	NRSA02J-102NY	MG RESISTOR	1.0K 5% 1/10W	
	R 587	NRSA02J-222NY	MG RESISTOR	2.2K 5% 1/10W	
	R 588	NRSA02J-182NY	MG RESISTOR	1.8K 5% 1/10W	
	R 589	NRSA02J-472NY	MG RESISTOR	4.7K 5% 1/10W	
	R 590	NRSA02J-824NY	MG RESISTOR	820K 5% 1/10W	
	R 591	NRSA02J-222NY	MG RESISTOR	2.2K 5% 1/10W	
	R 592	NRSA02J-221NY	MG RESISTOR	220 5% 1/10W	
	R 601	NRSA02J-472NY	MG RESISTOR	4.7K 5% 1/10W	
	R 602	NRSA02J-103NY	MG RESISTOR	10K 5% 1/10W	
	R 606	QRD161J-103	CARBON RESISTOR	10K 5% 1/6W	
	R 607	QRD161J-103	CARBON RESISTOR	10K 5% 1/6W	
	R 608	QRD161J-103	CARBON RESISTOR	10K 5% 1/6W	
	R 609	QRD161J-103	CARBON RESISTOR	10K 5% 1/6W	
	R 610	QRD161J-103	CARBON RESISTOR	10K 5% 1/6W	
	R 611	NRSA02J-223NY	MG RESISTOR	22K 5% 1/10W	
	R 612	NRSA02J-103NY	MG RESISTOR	10K 5% 1/10W	
	R 613	NRSA02J-181NY	MG RESISTOR	180 5% 1/10W	
	R 614	NRSA02J-223NY	MG RESISTOR	22K 5% 1/10W	
	R 615	NRSA02J-223NY	MG RESISTOR	22K 5% 1/10W	
	R 616	NRSA02J-682NY	MG RESISTOR	6.8K 5% 1/10W	
	R 617	NRSA02J-681NY	MG RESISTOR	680 5% 1/10W	
	R 618	NRSA02J-223NY	MG RESISTOR	22K 5% 1/10W	
	R 622	NRSA02J-103NY	MG RESISTOR	10K 5% 1/10W	
	R 623	NRSA02J-103NY	MG RESISTOR	10K 5% 1/10W	
	R 625	NRSA02J-223NY	MG RESISTOR	22K 5% 1/10W	
	R 627	NRSA02J-472NY	MG RESISTOR	4.7K 5% 1/10W	
	R 628	NRSA02J-472NY	MG RESISTOR	4.7K 5% 1/10W	
	R 629	NRSA02J-472NY	MG RESISTOR	4.7K 5% 1/10W	
	R 631	NRSA02J-103NY	MG RESISTOR	10K 5% 1/10W	
	R 632	NRSA02J-103NY	MG RESISTOR	10K 5% 1/10W	
	R 633	NRSA02J-181NY	MG RESISTOR	180 5% 1/10W	
	R 651	NRSA02J-104NY	MG RESISTOR	100K 5% 1/10W	
	R 652	NRSA02J-101NY	MG RESISTOR	100 5% 1/10W	
	R 653	NRSA02J-223NY	MG RESISTOR	22K 5% 1/10W	
	R 654	NRSA02J-334NY	MG RESISTOR	330K 5% 1/10W	
	R 655	NRSA02J-101NY	MG RESISTOR	100 5% 1/10W	
	R 656	NRSA02J-223NY	MG RESISTOR	22K 5% 1/10W	
	R 657	NRSA02J-334NY	MG RESISTOR	330K 5% 1/10W	
	R 658	NRSA02J-331NY	MG RESISTOR	330 5% 1/10W	
	R 660	NRSA02J-103NY	MG RESISTOR	10K 5% 1/10W	
	R 661	NRSA02J-104NY	MG RESISTOR	100K 5% 1/10W	

www.manualscenter.com

BLOCK NO. 01

⚠	REF.	PARTS NO.	PARTS NAME	REMARKS	SUFFIX
	R 804	NRS181J-1R0NY	MG RESISTOR	1.0 5% 1/8W	
	R 805	NRS181J-1R0NY	MG RESISTOR	1.0 5% 1/8W	
	R 806	QRD161J-2R2	CARBON RESISTOR	B323	
	R 901	NRSA02J-103NY	MG RESISTOR	10K 5% 1/10W	
	R 902	NRSA02J-392NY	MG RESISTOR	3.9K 5% 1/10W	
	R 903	NRSA02J-392NY	MG RESISTOR	3.9K 5% 1/10W	
	R 904	NRSA02J-392NY	MG RESISTOR	3.9K 5% 1/10W	
	R 911	NRSA02J-472NY	MG RESISTOR	4.7K 5% 1/10W	
	R 912	NRSA02J-100NY	MG RESISTOR	10 5% 1/10W	
	R 921	NRSA02J-273NY	MG RESISTOR	27K 5% 1/10W	
	R 922	NRSA02J-224NY	MG RESISTOR	220K 5% 1/10W	
	R 923	NRSA02J-184NY	MG RESISTOR	180K 5% 1/10W	
	R 924	NRSA02J-223NY	MG RESISTOR	22K 5% 1/10W	
	R 925	NRSA02J-223NY	MG RESISTOR	22K 5% 1/10W	
	R 926	NRSA02J-223NY	MG RESISTOR	22K 5% 1/10W	
	R 931	NRSA02J-223NY	MG RESISTOR	22K 5% 1/10W	
	R 932	NRSA02J-102NY	MG RESISTOR	1.0K 5% 1/10W	
	R 933	NRSA02J-223NY	MG RESISTOR	22K 5% 1/10W	
	R 941	NRSA02J-100NY	MG RESISTOR	10 5% 1/10W	
	R 942	NRSA02J-471NY	MG RESISTOR	470 5% 1/10W	
	R 943	QRX01DJ-R47X	M.F.RESISTOR	5% 1/1W	
	R 944	NRSA02J-332NY	MG RESISTOR	3.3K 5% 1/10W	
	R 951	NRSA02J-332NY	MG RESISTOR	3.3K 5% 1/10W	
	R 952	NRSA02J-224NY	MG RESISTOR	220K 5% 1/10W	
	R 953	NRSA02J-393NY	MG RESISTOR	39K 5% 1/10W	
	R 954	NRSA02J-104NY	MG RESISTOR	100K 5% 1/10W	
	R 961	NRSA02J-223NY	MG RESISTOR	22K 5% 1/10W	
	R 962	NRSA02J-332NY	MG RESISTOR	3.3K 5% 1/10W	
	R 963	NRSA02J-331NY	MG RESISTOR	330 5% 1/10W	
	R 971	NRSA02J-223NY	MG RESISTOR	22K 5% 1/10W	
	R 972	NRSA02J-222NY	MG RESISTOR	2.2K 5% 1/10W	
	R 973	NRSA02J-104NY	MG RESISTOR	100K 5% 1/10W	
	R 974	NRSA02J-223NY	MG RESISTOR	22K 5% 1/10W	
	S 601	QSQ1A11-V05	TACT SWITCH	SKHHLQ000	
	S 602	VSH1154-002	SWITCH	8/12 SW	
	S 603	VSH1153-002	SWITCH	TRAY OUT SW	
	S 604	VSH1153-002	SWITCH	TRAY IN SW	
	S 605	VSH1154-002	SWITCH	LIFT POS SW	
	S 606	VSH1153-002	SWITCH		
	VR501	QVZ3523-104	V.RESISTOR		
	VR502	NVP1301-472NZ	SEMI.V.RESISTOR		
	X 561	VCX5016-934V	CRYSTAL		
	X 601	EFO-EC4004T4	CERA LOCK		

■ Mechanism board

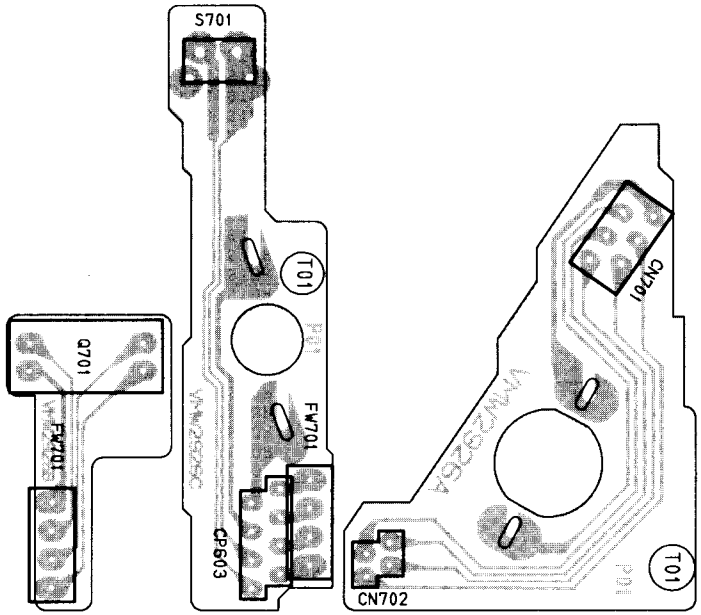

Fig. 9 – 2

● Mechanism board parts list

BLOCK NO. 02

⚠	REF.	PARTS NO.	PARTS NAME	REMARKS	SUFFIX
	CN701	VMC0163-006	CONNECTOR		
	CN702	VMC0125-004	CONNECTOR		
	CP603	VMC0234-R08	CONNECTOR		
	Q 701	SPI-232(B,C,D)	PHOTOINTERRUPT		
	Q 702	SPI-230(B,C,D)	PHOTOINTERRUPT		
	S 701	VSH1153-001	SWITCH		

www.manualscenter.com

10 Exploded view of enclosure component parts

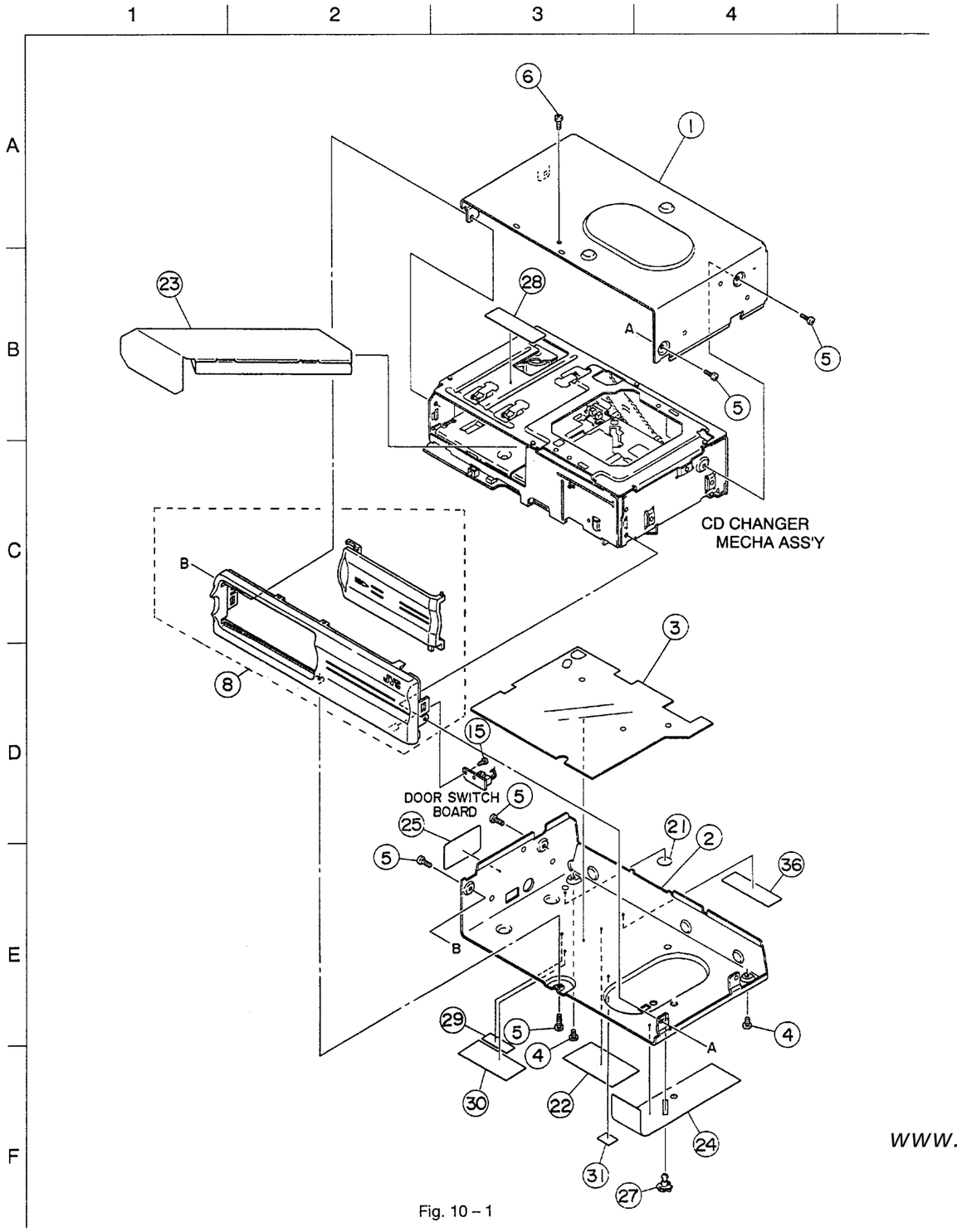

Fig. 10 – 1

● Enclosure component parts list

BLOCK NO. M1MM

⚠	REF.	PARTS NO.	PARTS NAME	REMARKS	QTY	SUFFIX	CLR
	1	VJG1301-022	TOP COVER		1		
	2	VJG1302-022	BOTTOM COVER		1		
	3	VMA3220-002	INSULATOR		1		
	4	SDST2604N	SCREW	BOTTOM REAR SID	2		
	5	VKZ4759-002	SPECIAL SCREW	BOT+TOP+MECHA	5		
	6	SDST2003N	SCREW	TOP COVER FRONT	1		
	8	VJC3277-00E	F.PANEL ASS'Y		1		
	15	SDSF2004Z	SCREW	FRONT+SW PWB	1		
	21	VYSS2R2-028	SPACER	FOR BOTTOM	1		
	22	VYN3694-001SA	NAME PLATE		1	A,C,J,U	
		VYN3694-002SA	NAME PLATE		1	B,E,G,GE	
		VYN3694-003SA	NAME PLATE		1	GI	
	23	VPK3319-002	MECHA HOLDER	FOR TRANSFER	1		
	24	VND5072-001	CAUTION SHEET	FOR TRANSFER	1		
	25	VND5028-001	CAUTION LABEL	FOR LEFT SIDE	1		
	27	VKS5502-002	TRA.MECHA HOLDE		1		
	28	E406709-001	LASER CAUTION		1	B,E,G,GE,GI	
	29	E407097-002	HYATT L.LABEL		1	J	
	30	E70891-001	CLASS 1 LABEL		1	B,E,G,GE,GI	
		VND4922-001	CAUTION LABEL		1	J	
	31	VND4597-001	APROVAL LABEL		1	E	
	36	VND4999-001	FCC LABEL (3)		1	J	

www.manualscenter.com

11 Exploded view of mechanism component parts

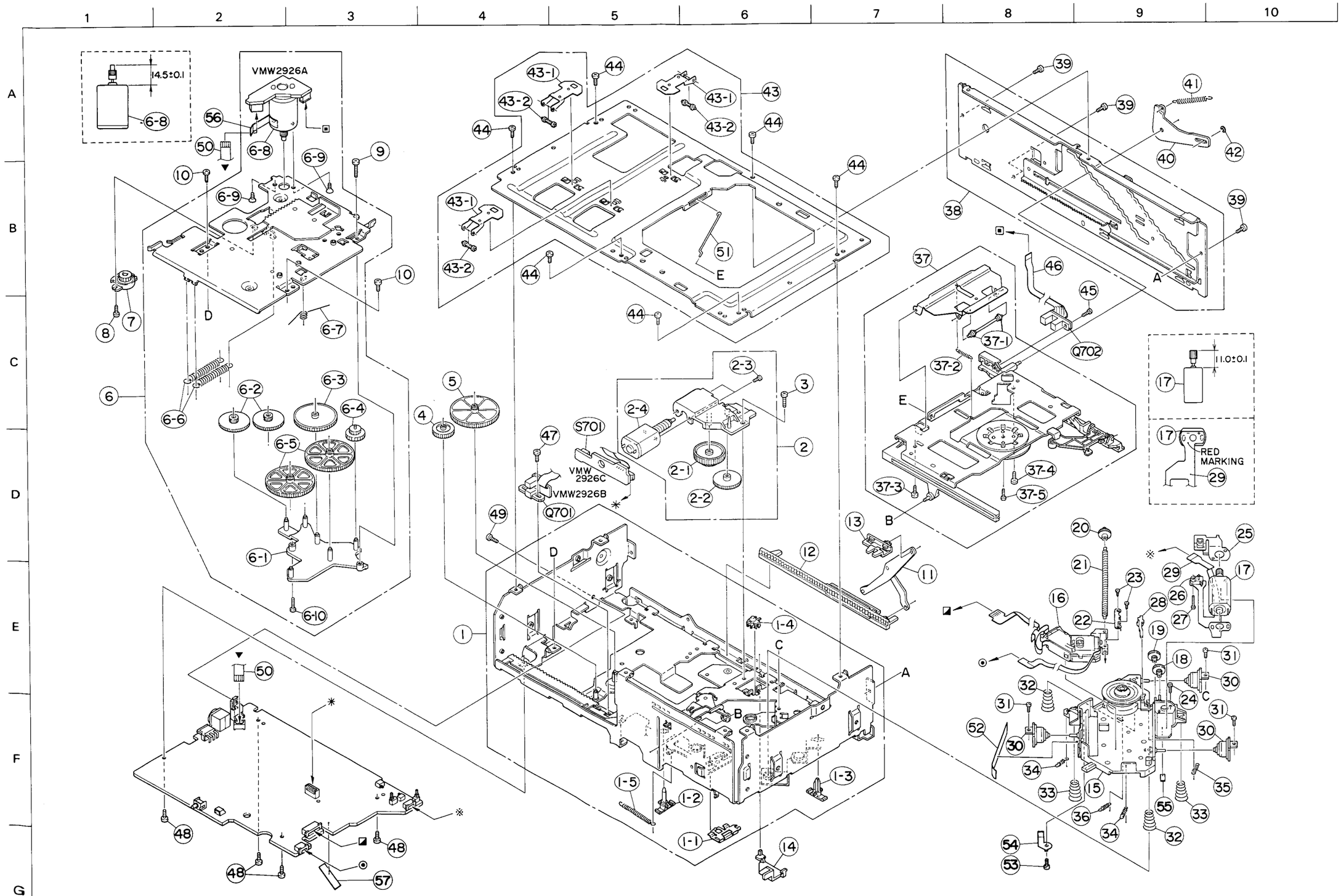

Fig. 11 – 1

www.manualscenter.com

● Mechanism component parts list

BLOCK NO. M2MM

⚠	REF.	PARTS NO.	PARTS NAME	REMARKS	QTY	SUFFIX	CLR
	1	VKL1425-00C	*CHASS FRAME AS		1		
	1-1	VKL7740-001	V-H SELECTOR		1		
	1-2	VKS5492-001	TRAY GUIDE(1)		1		
	1-3	VKS5493-002	TRAY GUIDE(2)		1		
	1-4	VKS5494-001	CDB DETECTOR		1		
	1-5	VKW5135-005	TENSION SPRING	(T.LOCK SLIDER)	1		
	2	VKS3675-00A	LOADING GEAR AS		1		
	2-1	VKR4729-001	LOADING GEAR		1		
	2-2	VKS5345-001	JOINT GEAR		1		
	2-3	SPSH2030M	MINI SCREW		2		
	2-4	PWN-10EB12A	DC.MOTOR	(TRAY LOADING)	1		
	3	SDST2605Z	SCREW		1		
	4	VKR4730-001	UP DOWN GEAR		1		
	5	VKR4739-001	SLIDER GEAR		1		
	6	VKL2729-00A	MAG PLATE UNIT		1		
	6- 1	VKS2236-001	UP DOWN GEAR BA		1		
	6- 2	VKR3001-002T	GEAR 2		2		
	6- 3	VKR4732-001	CONNECT GEAR		1		
	6- 4	VKR4730-001	UP DOWN GEAR		1		
	6- 5	VKR4731-001	SLIDER GEAR		2		
	6- 6	VKW5136-002	TENSION SPRING		2		
	6- 7	VKW5137-001	TORSION SPRING		1		
	6- 8	MXN-13FB12F	DC MOTOR ASS'Y	(UP DOWN)	1		
	6- 9	SDSP3003Z	SCREW		2		
	6-10	SDST2008Z	SCREW		1		
	7	VKZ4737-001	DAMPER		1		
	8	SDST2005Z	SCREW		1		
	9	SDST2610Z	SCREW		1		
	Q 701	SPI-232(B,C,D)	PHOTOINTERRUPT		1		
	Q 702	SPI-230(B,C,D)	PHOTOINTERRUPT		1		
	S 701	VSH1153-002	SWITCH		1		
	10	SDST2605Z	SCREW		2		
	11	VKL7736-00A	LOADING ARM ASY		1		
	12	VKS2237-001	LOADING RACK		1		
	13	VKS5495-004	HOOK		1		
	14	VKS5496-003	LOADING SW.ACT.		1		
	15	VKS3678-00B	*TRA MECHA ASS'		1		
⚠	16	OPTIMA-60D	PICK UP UNIT		1		
	17	FF-050SK-11170	DC MOTOR	(FEED)	1		
	18	VKR4733-001	MIDDLE GEAR		1		
	19	VKR4737-001	THIRD GEAR		1		
	20	VKR4736-001	S.SHAFT GEAR		1		
	21	VKZ4732-002	SCREW SHAFT		1		
	22	VKL7756-001	RACK PLATE		1		
	23	SPSK1720M	MINI SCREW		2		
	24	DPSP2005Z	SCREW		1		
	25	VKY4698-002	S.SHAFT SPRING		1		
	26	VSH1142-001	SWITCH		1		
	27	VKZ4248-208	MINI SCREW		1		
	28	VKS5500-001	REST SWITCH ACT		1		
	29	VMW3691-001	PW BOARD		1		
	30	VKZ4733-002	DAMPER		3		
	31	SDST2005Z	SCREW		3		
	32	VKW5138-002	SUSPENSION SP.		2		

www.manualscenter.com

BLOCK NO. M2MM

⚠	REF.	PARTS NO.	PARTS NAME	REMARKS	QTY	SUFFIX	CLR
	33	VKW5138-004	SUSPENSION SP.		2		
	34	VKW5139-002	TENSION SPRING		2		
	35	VKW5145-002	TENSION SPRING		1		
	36	VKW5140-002	SELECTOR SP.		1		
	37	VKM3804-00D	LIFTER ASS'Y		1		
	37-1	VKZ4563-002	O-RING		2		
	37-2	VKW5141-002	TENSION SPRING		1		
	37-3	SDST2605Z	SCREW		1		
	37-4	SDST2605Z	SCREW		1		
	37-5	SPST2004Z	SCREW		1		
	38	VKM3807-00A	REAR CHASS ASSY		1		
	39	SDST2603Z	SCREW		3		
	40	VKL7742-001	LIFTER TENS.ARM		1		
	41	VKW5142-002	TENSION SPRING		1		
	42	REE1500X	E.RING		1		
	43	VKM3811-00A	TOP PLATE ASS'Y		1		
	43-1	VKY4699-001	MAGAZINE SPRING		3		
	43-2	VKR4734-001	MAGAZINE ROLLER		3		
	44	SDST2603Z	SCREW		6		
	45	VKZ4276-001	SPECIAL SCREW		1		
	46	VMW3692-001	PW BOARD		1		
	47	SDST2605Z	SCREW		1		
	48	SDST2605Z	SCREW		4		
	49	SWSP2606Z	SCREW		1		
	50	VWF1206-08TTBX	TAF CARD		1		
	51	VKZ4744-001	SAFTY ROD		1		
	52	VYSA1R3-041	SPACER		1		
	53	SPSH1765N	MINI SCREW		1		
	54	VKL7765-001	P.S.SPRING		1		
	55	VYTT473-005	DOUBLE FACE		1		
	56	VYSB1R3-011	SPACER		1		
	57	VYSA1R4-050	SPACER		1		

www.manualscenter.com

12 Packing illustration and parts list

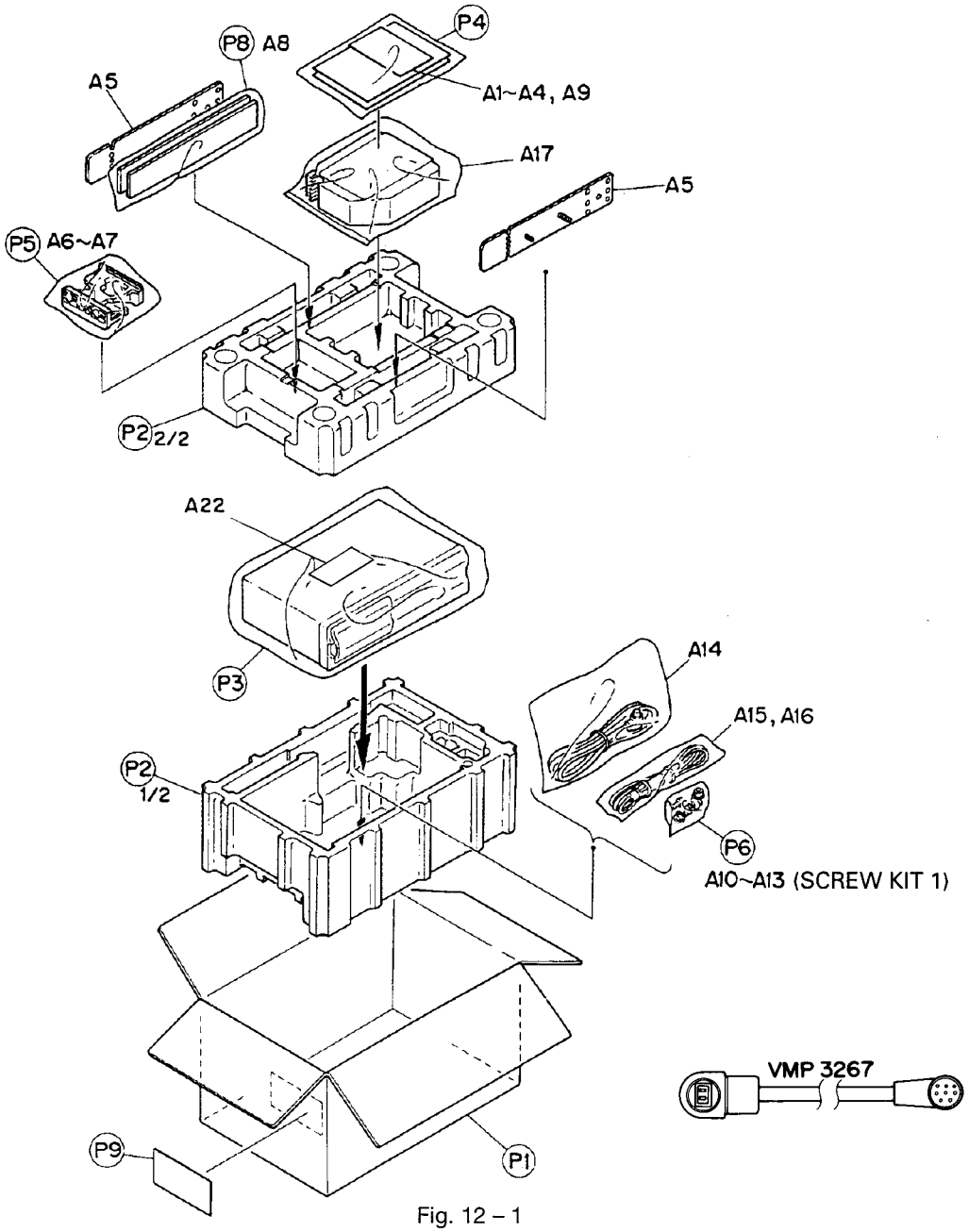

Fig. 12 – 1

● Packing parts list

BLOCK NO. M3MM

⚠	REF.	PARTS NO.	PARTS NAME	REMARKS	QTY	SUFFIX	CLR
	P 1	VPC3694-S001	CARTON		1		
	P 2	VPH1669-00A	CUSHION ASS'Y		1		
	P 3	VPE3005-066	POLY BAG	FOR UNIT	1		
	P 4	QPGA017-02505	POLY BAG	INSTRUCTIONS	1		
	P 5	QPGA015-02503	POLY BAG	MOUNT HOLDER	1		
	P 6	QPGA008-01205	POLY BAG	SCREW SA	1		
	P 8	QPGA007-03003	ENVELOPE	FOR SPACER	1		
	P 9	----------	LABEL	FOR VND3111-107	1		

www.manualscenter.com

● Accessories

BLOCK NO. M4MM

⚠	REF.	PARTS NO.	PARTS NAME	REMARKS	QTY	SUFFIX	CLR
	A 1	VNN3694-211S	INSTRUCT.BOOK		1	B,E,G,GE,GI	
		VNN3694-451S	INSTRUCT.BOOK		1	E	
		VNN3694-471S	INSTRUCT.BOOK		1	GI	
		VNN3694-481S	INSTRUCT.BOOK		1	E	
		VNN3694-631S	INSTRUCT.BOOK		1	A,C,J,U	
	A 2	BT-52002-1	WARRANTY CARD		1	C	
		BT-54003-1	WARRANTY CARD		1	B	
		BT-56001-1	WARRANTY CARD		1	A	
		BT-20122-1-A	WARRANTY CARD		1	A	
		BT-20135	WARRANTY CARD		1	G	
		BT-20059D	WARRANTY CARD		1	J	
		BT-20066A	WARRANTY CARD		1	B	
	A 3	BT-20071B	SVC CENTER LIST		1	C	
		BT-20137	SERVICE NETWORK		1	J	
	A 4	VNC2400-110	INST SHEET		1		
	A 5	VKM3821-00B	MOUNT BASE ASSY	MOUNT BASE+BOLT	2		
	A 6	VKS3691-001	MOUNT HOLDER(L)		1		
	A 7	VKS3692-001	MOUNT HOLDER(R)		1		
	A 8	VYSH103-096	SPACER	FOR MOUNT BASE	2		
	A 9	VYTT670-001	SEAL		1		
	A 10	SDSP4008Z	SCREW		4		
	A 11	VKZ4328-001	LOCK NUT	M5	4		
	A 12	WNS5000Z	WASHER		4		
	A 13	VKZ4029-003	SCREW	M5 X 20	4		
	A 14	VMP3267-001	8P DIN BUS CORD		1		
	A 15	VMC0014-143	POWER CORD		1	A,B,C,G	
		VMC0014-157	POWER CORD(E)		1	E	
		VMC0014-143	POWER CORD		1	GE,GI,J,U	
	A 16	QMF61G3-6R3J1	FUSE		1		
	A 17	VYA3007-00P	MAGAZINE ASSY	POLYBAG+SEEL	1		
	A 22	VNC2400-104	INST SHEET		1		
	KIT 1	KDMK70K-SCREW1	SCREW PARTS KIT	A10-A13	1		

www.manualscenter.com

JVC
VICTOR COMPANY OF JAPAN, LIMETED
MOBILE ELECTRONICS DIVISION 10-1, 1-chome, Ohwatari-cho, maebashi-city 371, Japan

(No.49276)

Printed in Japan
-H0801-V-