aiwa

Z-D3000M

SERVICE MANUAL

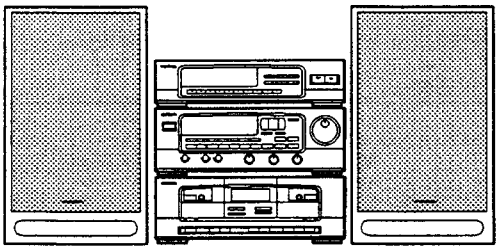

COMPACT DISC STEREO SYSTEM

- BASIC TAPE MECHANISM : 2ZM – 1P1N,R1N
- BASIC CD MECHANISM : KSM – 2101ABM
- TYPE. HE,LH,E,K,Z

※CENTER SYSTEM	AMPLIFIER	CASSETTE DECK	TUNER	SPEAKER	CD PLAYER (OPTIONAL)	TURNTABLE (OPTIONAL)
Z – D3000M HE,LH	MX – Z3000M	FX – WZ5000	TX – Z7000	※1 SX – Z3000	※2 DX – Z980M, DX – Z950M, DX – Z850, DX – Z830	※3 PX – E900, PX – E750
Z – D3000M E,K,Z	MX – Z3000M	FX – WZ5000	TX – Z7000	※1 SX – Z3000	※2 DX – Z850, DX – Z830, DX – Z7000M	※3 PX – E800, PX – E750

※1 CENTER SYSTEM dose not have ※1.

※2 As to the service information of CD PLAYER, see the individual service manual of original.

※3 As to the service information of TURNTABLE see the individual service manual of original.

M05

S/M Code No. 0281 DATE OF ISSUE 6/1993 – K

TABLE OF CONTENTS

SPECIFICATIONS

TUNER TX-Z7000

<FM section>

Frequency range	76 MHz to 108 MHz
Usable sensitivity (IHF)	2.2 µV (75 ohms) 18.2 dBf
Alternate channel selectivity	50 dB (±400 kHz)
Signal-to-noise ratio	70 dB (STEREO), 78 dB (MONO)
Harmonic distortion	0.3% (MONO), 1 kHz 0.8% (STEREO), 1 kHz
Frequency response	20 Hz to 15 kHz (+0.5 dB, –3 dB)
Stereo separation	40 dB at 1 kHz
Antenna	75 ohms (unbalanced)

<AM section: YH, YLH>

Frequency range	531 (530) kHz to 1,602 (1,710) kHz
Usable sensitivity	300 µV/m
Selectivity	22 dB (9 kHz)
Signal-to-noise ratio	53 dB (100 dB input)
Antenna	Loop antenna

<MW section: YE, YZ>

Frequency range	522 kHz to 1,611 kHz
Usable sensitivity	400 µV/m
Selectivity	22 dB (9 kHz)
Signal-to-noise ratio	53 dB (100 dB input)
Antenna	Loop antenna

<LW section: YE, YZ>

Frequency range	144 kHz to 290 kHz
Usable sensitivity	1,000 µV/m
Antenna	Loop antenna

<Timer section and general>

Program timer	"Once" and/or "every"
Sleep timer	Capable of setting in 10 minute increments, 99 minutes maximum
Dimensions (W×H×D)	360 × 88 × 315 mm (14 1/4 × 3 1/2 × 12 1/2 in.)
Weight	2.3 kg (5.28 lb.)

AMPLIFIER MX-Z3000M

Power output	50 W + 50 W (6 ohms, T.H.D. 10%, 1 kHz) 40 W + 40 W (6 ohms, T.H.D. 1%, 1 kHz)
Harmonic distortion	0.05% (25 W, 1 kHz, 6 ohms)
Input sensitivity (load impedance)	VIDEO 1/DAT: 300 mV (33 kohms) VIDEO 2/AUX: 600 mV (27 kohms)
Signal-to-noise ratio	87 dB
Power requirements	H, HE: 120/220/240 V AC, selectable, 50/60 Hz E, Z: 230 V AC, 50 Hz K: 240 V AC, 50 Hz
Power consumption	H, HE: 90 W (System total 110 W) E, K, Z: 230 W (System total 250 W)
Dimensions (W×H×D)	360 × 128 × 332.5 mm (14 1/4 × 5 1/8 × 13 1/8 in.)
Weight	H, HE: 5.3 kg (11.66 lb.) E, K, Z: 5.4 kg (11.88 lb.)

CASSETTE DECK FX-WZ5000

Track format	4 tracks, 2 channels
Frequency response	Metal tape: 20 – 17,000 Hz CrO_2 tape: 20 – 16,000 Hz Normal tape: 20 – 15,000 Hz
Signal-to-noise ratio	65 dB (Dolby NR ON, Metal tape peak level above 5 kHz)
Wow and flutter	0.12% (WRMS) ± 0.19% (WPEAK)
Tape speed	4.8 cm/sec. (1 7/8 ips) 9.5 cm/sec. (double speed)
Rewind time	120 sec. (C-60)
Fast forward time	120 sec. (C-60)
Recording system	AC bias
Erase system	AC erase
Motor	DC servomotor × 2
Heads	Playback head × 1 (deck 1) Record/playback/erasure head × 1 (deck 2)
Dimensions (W×H×D)	360 × 128 × 309.5 mm (14 1/4 × 5 1/8 × 12 1/4 in.)
Weight	3.0 kg (6.6 lb.)

SPEAKER SX-Z3000

Cabinet type	3 way, bass reflex
Speaker	220 mm cone type woofer 60 mm cone type tweeter 30 mm ceramic type super tweeter
Impedance	6 ohms
Music power	60 W
Output sound pressure level	90 dB/W/m
Dimensions (W×H×D)	270 × 442 × 255 mm (10 3/4 × 17 1/2 × 10 1/8 in.)
Weight	6.0 kg (13.2 lb.)

COMMON SECTION

Power requirements	H, HE: 120/220/240 V AC, selectable, 50/60 Hz E, Z: 230 V AC, 50 Hz K: 240 V AC, 50 Hz
Dimensions (W×H×D)	900 × 442 × 332.5 mm (35 1/2 × 17 1/2 × 13 1/8 in.) (vertical placement) 1,620 × 442 × 332.5 mm (63 7/8 × 17 1/2 × 13 1/8 in.) (horizontal placement)
Weight	H, HE: 22.6 kg (49.72 lb.) E, K, Z: 22.7 kg (49.94 lb.)

Design and specifications are subject to change without notice.

Dolby noise reduction manufactured under license from Dolby Laboratories Licensing Corporation.
"DOLBY" and the double-D symbol DD are trademarks of Dolby Laboratories Licensing Corporation.

The word "BBE" and the "BBE" symbol" are trademarks of BBE Sound, Inc.

Under license from BBE Sound, Inc.

TRANSISTOR ILLUSTRATION (MX−Z3000M, FX−WZ5000, TX−Z7000)

2SA1015
2SA1296
2SA1318
2SA952
2SC1815
2SC2001
2SC3266
2SC3331
2SD655
2SA1048
2SC2458
2SD1302

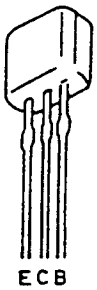

2SA933
2SC1740
DTA144ES
DTA114YS
DTC114YS
DTC144ES
2SD2144

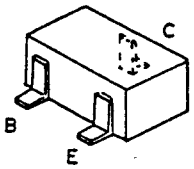

2SA1362
2SC1623
2SC2714
2SC3326
2SC2712
DTA114YK
DTA114EK
DTC143TK
DTC144EK
DTA123JK

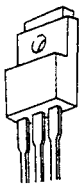

2SB1370

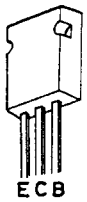

2SB1354

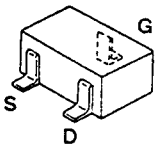

2SK209
2SK211
2SK302
2SK368

■ ACCESSORIES／PACKAGE LIST

DESCRIPTIONで判断できない物は "REFERENCE NAME LIST" を参照してください。
If can't understand for Description please kindly refer to "REFERENCE NAME LIST".

REF. NO	PART NO.	カンリ NO.	DESCRIPTION
1	82-VP3-902-018		IB, H(G)〈K〉
2	82-VP3-901-119		IB, H(S)〈HE, H, Z, E〉
3	82-VP3-903-018		IB, E(G)〈K〉
4	82-VP3-904-019		IB, E(S)〈E〉
5	87-006-226-019		AM LOOP ANT CON2〈K, Z〉
6	87-006-225-019		AM LOOP ANT NC2〈HE, H, E〉
7	87-043-115-019		ANT, FEEDER FM〈HE, H, K, Z〉
9	87-043-106-019		FM, WIRE ANT (Z)〈E〉
10	82-VP3-644-019		RC, RC-TZ3000MF〈HE, H〉
11	82-VP3-647-019		RC, RC-TZ3000ML〈K, Z, E〉
12	82-009-724-019		PLUG, ADPTR, IR39〈H〉
13	87-042-062-019		PLUG, ADPTR S-16115〈HE〉

MODEL NO.

MX − Z3000M

ELECTRICAL MAIN PARTS LIST (MX − Z3000M)

DESCRIPTIONで判断できない物は "REFERENCE NAME LIST" を参照してください。
If can't understand for Description please kindly refer to "REFERENCE NAME LIST".

REF. NO	PART NO.	カンリ NO.	DESCRIPTION
IC			
	87-002-950-010		IC, BA3826S
	87-002-637-010		IC, BU4051B
	87-002-247-010		IC, BU4052B
	87-002-444-010		IC, BU4094B
	82-VP2-618-010		IC, CXP82316-135Q
	87-001-530-010		IC, LA3607
	87-017-311-080		IC, M65831FP〈HE〉
	87-002-220-010		IC, MPA80C
	87-002-727-010		IC, NJM4558L
	87-001-134-010		IC, NJU4053BD
	87-002-429-010		IC, NJU7305L
	87-001-582-010		IC, STK4152-2
	87-002-218-010		IC, XRC5451AP
TRANSISTOR			
	89-110-155-080		TR, 2SA1015GR
	89-113-187-880		TR, 2SA1318TU
	87-026-463-080		TR, 2SA933S (RS)
	89-213-542-310		TR, 2SB1354EF
	89-213-702-010		TR, 2SB1370E
	87-026-462-080		TR, 2SC1740S (RS)
	89-318-155-080		TR, 2SC1815GR
	89-332-665-080		TR, 2SC3266GR
	89-333-317-880		TR, 2SC3331TU
	87-026-500-080		TR, 2SD2144S, UV
	89-406-555-080		TR, 2SD655E
	87-026-219-080		TR, DTA144ES
	87-026-215-080		TR, DTC114YS
DIODE			
	87-001-574-080		DIODE, 1SR139-200
	87-001-559-080		DIODE, 1SS131
	87-020-691-080		DIODE, 1SS132
	87-002-225-010		DIODE, DBF 40C-K10
	87-002-608-080		DIODE, DSF10TC〈H〉
	87-001-408-080		DIODE, GP 15B〈E, K, Z〉
	87-027-606-080		ZENER, HZ7C2SL
	87-017-086-080		ZENER, HZS5A2
	87-017-091-080		ZENER, HZS5C1〈HE〉
	87-017-096-080		ZENER, HZS6A3
	87-002-743-080		ZENER, MTZJ33B
	87-001-916-080		ZENER, UTZJ10B
	87-001-911-080		ZENER, UTZJ4. 7A
	87-001-912-080		ZENER, UTZJ5. 1B
	87-001-913-080		ZENER, UTZJ5. 6B
	87-001-915-080		ZENER, UTZJ6. 8A
	87-002-430-080		ZENER, UTZJ8. 2C
MAIN C. B			
C1	87-018-214-080		CAP, TC-U 0. 1-50 F
C2	87-018-214-080		CAP, TC-U 0. 1-50 F〈E, K, HE, H〉
C3	87-018-214-080		CAP, TC-U 0. 1-50 F〈Z〉
C4	87-010-804-010		CAP, E 4700-42V
C5	87-010-804-010		CAP, E 4700-42V
C15	87-010-260-080		CAP, E 47-25 SME
C16	87-010-384-080		CAP, E 100-25 SME
C17	87-010-764-080		CAP, E 47-63
C27	87-010-405-080		CAP, E 10-50 SME
C28	87-010-101-080		CAP, E 220-16 SME
C29	87-010-247-080		CAP, E 100-50 SME
C60	87-010-403-080		CAP, E 3. 3-50 SME
C61	87-010-374-080		CAP, E 47-10
C70	87-010-453-010		CAP, E 4700-25
C71	87-010-405-080		CAP, E 10-50 SME
C72	87-010-260-080		CAP, E 47-25 SME
C73	87-010-101-080		CAP, E 220-16 SME
C74	87-010-381-080		CAP, E 330-16 SME
C75	87-010-374-080		CAP, E 47-10
C77	87-018-208-080		CAP, TC-U 0. 047-50 F
C78	87-018-208-080		CAP, TC-U 0. 047-50 F
C79	87-018-127-080		CAP, TC-U 470P-50 B
C101	87-010-404-080		CAP, E 4. 7-50 SME
C102	87-010-404-080		CAP, E 4. 7-50 SME
C103	87-010-406-080		CAP, E 22-50 SME
C104	87-010-374-080		CAP, E 47-10
C105	87-010-263-080		CAP, E 100-10
C106	87-010-221-080		CAP, E 470-10
C141	87-010-406-080		CAP, E 22-50 SME
C191	87-010-405-080		CAP, E 10-50 SME
C192	87-010-405-080		CAP, E 10-50 SME
C193	87-010-405-080		CAP, E 10-50 SME
C194	87-010-405-080		CAP, E 10-50 SME
C198	87-010-405-080		CAP, E 10-50 SME
C199	87-010-405-080		CAP, E 10-50 SME
C200	87-010-405-080		CAP, E 10-50 SME
C201	87-018-134-080		CAP, TC-U 0. 01-16 Y
C202	87-018-134-080		CAP, TC-U 0. 01-16 Y
C250	87-010-401-080		CAP, E 1-50 SME
C251	87-010-101-080		CAP, E 220-16 SME
C252	87-010-401-080		CAP, E 1-50 SME
C253	87-010-401-080		CAP, E 1-50 SME
C254	87-010-405-080		CAP, E 10-50 SME
C255	87-010-405-080		CAP, E 10-50 SME
C256	87-010-401-080		CAP, E 1-50 SME
C257	87-010-401-080		CAP, E 1-50 SME
C258	87-010-404-080		CAP, E 4. 7-50 SME
C259	87-010-404-080		CAP, E 4. 7-50 SME
C260	87-010-400-080		CAP, E 0. 47-50 SME
C261	87-010-400-080		CAP, E 0. 47-50 SME
C262	87-010-404-080		CAP, E 4. 7-50 SME
C263	87-010-404-080		CAP, E 4. 7-50 SME
C264	87-010-404-080		CAP, E 4. 7-50 SME
C265	87-010-405-080		CAP, E 10-50 SME
C266	87-010-405-080		CAP, E 10-50 SME
C267	87-010-405-080		CAP, E 10-50 SME
C269	87-018-121-080		CAP, TC-U 150P-50 B
C270	87-018-121-080		CAP, TC-U 150P-50 B
C273	87-018-134-080		CAP, TC-U 0. 01-16 Y
C274	87-018-134-080		CAP, TC-U 0. 01-16 Y
C275	87-018-198-080		CAP, TC-U 2700P-16 X
C276	87-018-198-080		CAP, TC-U 2700P-16 X
C277	87-018-122-080		CAP, TC-U 180P-50 B
C278	87-018-122-080		CAP, TC-U 180P-50 B
C281	87-010-544-080		CAP, E 0. 1-50
C282	87-010-544-080		CAP, E 0. 1-50
C283	87-010-545-080		CAP, E 0. 22-50 SME
C284	87-010-545-080		CAP, E 0. 22-50 SME
C285	87-010-404-080		CAP, E 4. 7-50 SME
C286	87-010-405-080		CAP, E 10-50 SME
C287	87-010-405-080		CAP, E 10-50 SME
C288	87-010-405-080		CAP, E 10-50 SME
C289	87-010-401-080		CAP, E 1-50 SME
C290	87-010-404-080		CAP, E 4. 7-50 SME
C291	87-018-195-080		CAP, TC-U 1200P-16 X
C292	87-018-195-080		CAP, TC-U 1200P-16 X

REF. NO	PART NO.	カンリ NO.	DESCRIPTION
C293	87-018-128-080		CAP, TC-U 560P-50 B
C294	87-018-128-080		CAP, TC-U 560P-50 B
C360	87-010-404-080		CAP, E 4.7-50 SME
C501	87-010-404-080		CAP, E 4.7-50 SME
C502	87-010-404-080		CAP, E 4.7-50 SME
C503	87-010-404-080		CAP, E 4.7-50 SME
C504	87-010-404-080		CAP, E 4.7-50 SME
C505	87-010-404-080		CAP, E 4.7-50 SME
C506	87-010-404-080		CAP, E 4.7-50 SME
C507	87-010-404-080		CAP, E 4.7-50 SME
C508	87-010-404-080		CAP, E 4.7-50 SME
C509	87-018-127-080		CAP, TC-U 470P-50 B
C510	87-018-127-080		CAP, TC-U 470P-50 B
C511	87-010-402-080		CAP, E 2.2-50 SME
C512	87-010-402-080		CAP, E 2.2-50 SME
C515	87-010-546-080		CAP, E 0.33-50 SME
C516	87-010-546-080		CAP, E 0.33-50 SME
C519	87-010-544-080		CAP, E 0.1-50
C520	87-010-544-080		CAP, E 0.1-50
C526	87-018-203-080		CAP, TC-U 8200P-16 Y
C529	87-018-199-080		CAP, TC-U 3300P-16 X
C530	87-018-199-080		CAP, TC-U 3300P-16 X
C531	87-018-134-080		CAP, TC-U 0.01-16 Y
C532	87-018-134-080		CAP, TC-U 0.01-16 Y
C533	87-018-131-080		CAP, TC-U 1000P-50 B
C534	87-018-131-080		CAP, TC-U 1000P-50 B
C535	87-018-199-080		CAP, TC-U 3300P-16 X
C536	87-018-199-080		CAP, TC-U 3300P-16 X
C537	87-018-127-080		CAP, TC-U 470P-50 B
C538	87-018-127-080		CAP, TC-U 470P-50 B
C539	87-010-260-080		CAP, E 47-25 SME
C540	87-010-260-080		CAP, E 47-25 SME
C541	87-010-260-080		CAP, E 47-25 SME
C591	87-018-123-089		CAP, TC-U 220P-50 B〈Z〉
C592	87-018-123-089		CAP, TC-U 220P-50 B〈Z〉
C670	87-010-405-080		CAP, E 10-50 SME
C671	87-010-400-080		CAP, E 0.47-50 SME
C681	87-016-072-080		CAP, E 0.47-50 FX
C682	87-016-072-080		CAP, E 0.47-50 FX
C683	87-010-401-080		CAP, E 1-50 SME
C684	87-010-401-080		CAP, E 1-50 SME
C685	87-010-400-080		CAP, E 0.47-50 SME
C686	87-010-400-080		CAP, E 0.47-50 SME
C687	87-010-401-080		CAP, E 1-50 SME
C688	87-010-401-080		CAP, E 1-50 SME
C689	87-016-096-080		CAP, E 47-16 FX
C690	87-016-096-080		CAP, E 47-16 FX
C691	87-010-401-080		CAP, E 1-50 SME
C692	87-010-401-080		CAP, E 1-50 SME
C693	87-010-402-080		CAP, E 2.2-50 SME
C694	87-010-402-080		CAP, E 2.2-50 SME
C695	87-010-400-080		CAP, E 0.47-50 SME
C696	87-010-401-080		CAP, E 1-50 SME
C697	87-010-403-080		CAP, E 3.3-50 SME
C698	87-010-403-080		CAP, E 3.3-50 SME
C699	87-010-544-080		CAP, E 0.1-50
C701	87-010-405-080		CAP, E 10-50 SME
C702	87-010-405-080		CAP, E 10-50 SME
C703	87-018-128-080		CAP, TC-U 560P-50 B
C704	87-018-128-080		CAP, TC-U 560P-50 B
C705	87-018-123-089		CAP, TC-U 220P-50 B〈Z〉
C706	87-018-123-089		CAP, TC-U 220P-50 B〈Z〉
C758	87-010-408-080		CAP, E 47-50 SME
C759	87-010-374-080		CAP, E 47-10
C760	87-010-374-080		CAP, E 47-10
C761	87-018-111-080		CAP, TC-U 27P-50 SL
C762	87-018-111-080		CAP, TC-U 27P-50 SL
C763	87-010-260-080		CAP, E 47-25 SME
C764	87-010-260-080		CAP, E 47-25 SME
C765	87-018-214-080		CAP, TC-U 0.1-50 F
C766	87-018-214-080		CAP, TC-U 0.1-50 F
C769	87-018-134-080		CAP, TC-U 0.01-16 Y〈Z〉
C770	87-018-134-080		CAP, TC-U 0.01-16 Y〈Z〉
C771	87-018-134-080		CAP, TC-U 0.01-16 Y〈Z〉
C772	87-018-134-080		CAP, TC-U 0.01-16 Y〈Z〉
C773	87-018-134-080		CAP, TC-U 0.01-16 Y〈Z, HE, H〉
C791	87-018-123-089		CAP, TC-U 220P-50 B〈Z〉
C792	87-018-123-089		CAP, TC-U 220P-50 B〈Z〉
C800	87-018-134-080		CAP, TC-U 0.01-16 Y
C810	87-018-131-089		CAP, TC-U 1000P-50 B〈Z〉
J280	87-099-277-010		JACK 6.3 W/S (PHONES)
J281	87-099-064-010		JACK 6.3 W/S (MIC 1)
J283	87-099-064-010		JACK 6.3 W/S (MIC 2)
J750	81-VP1-634-010		JACK, PIN 3P (MON./REC OUT)
J751	81-VP1-634-010		JACK, PIN 3P (VIDEO 2/AUX)
J752	81-VP1-634-010		JACK, PIN 3P (VIDEO 1/DAT)
J753	87-009-393-010		JACK, PIN 2P EARTH (PHONO)
J754	87-009-063-010		CONN, 11P FG (CD)
J755	87-009-877-010		CONN, 9P FG (DECK)
J756	87-009-063-410		CONN, 11P BLU (TUNER)
J759	87-009-393-010		JACK, PIN 2P (SURROUND SP)
J760	87-033-225-010		TERMINAL, SP-4PN (SPEAKERS)
L751	87-005-366-010		COIL, 1UH〈Z〉
L752	87-005-366-010		COIL, 1UH〈Z〉
R25	87-022-450-090		RES, NF 100-1/2WJ FMG〈E, K, Z〉
R26	87-022-536-090		RES, NF 47-1/2W J FMG〈E, K, Z〉
R27	87-022-450-090		RES, NF 100-1/2WJ FMG〈E, K, Z〉
R40	87-022-050-080		RES, METAL 1W-0.22J
R45	87-022-050-080		RES, METAL 1W-0.22J
R777	87-022-050-080		RES, METAL 1W-0.22J
R778	87-022-050-080		RES, METAL 1W-0.22J
R779	87-022-050-080		RES, METAL 1W-0.22J
R780	87-022-050-080		RES, METAL 1W-0.22J
RY1	87-045-335-010		RELAY, G5Z-2A 12VDC
VR141	81-MT3-631-010		VR, 50KBX2 (INPUT LEVEL)
VR281	81-VP1-622-010		VR, 10KA RK11K112 (MIC MIX)
VR282	81-VP1-622-010		VR, 10KA RK11K112 (MIC MIX)
VR372	81-VP1-627-010		VR, 100KW RK11K112 (BALANCE)
W101	82-VP2-634-110		F-CABLE 5P-2.5〈E, K, Z〉
W101	82-VP2-635-010		F-CABLE 5P-2.5(H)〈HE, H〉
W102	82-VP2-634-110		F-CABLE 5P-2.5〈E, K, Z〉
RELAY C.B			
J757	87-009-413-010		CONN, 4P FG (DAT CONTROL)
FRONT C.B			
C1	87-010-401-080		CAP, E 1-50 SME
C2	87-010-401-080		CAP, E 1-50 SME
C3	87-010-405-080		CAP, E 10-50 SME
C5	87-010-550-040		CAP, E 100-6.3 GAS
C15	87-018-134-080		CAP, TC-U 0.01-16 Y
C16	87-018-134-080		CAP, TC-U 0.01-16 Y
C19	87-018-131-080		CAP, TC-U 1000P-50 B
C21	87-010-401-080		CAP, E 1-50 SME
C25	87-018-134-080		CAP, TC-U 0.01-16 Y
C151	87-018-134-080		CAP, TC-U 0.01-16 Y
C153	87-018-134-080		CAP, TC-U 0.01-16 Y
C160	87-010-263-080		CAP, E 100-10
C370	87-018-134-080		CAP, TC-U 0.01-16 Y〈HE〉
C382	87-018-201-080		CAP, TC-U 5600P-16 X〈HE〉
C383	87-018-131-080		CAP, TC-U 1000P-50 B〈HE〉
C384	87-018-209-080		CAP, TC-U 0.1-50 F〈HE〉
C385	87-010-374-080		CAP, E 47-10〈HE〉
C388	87-018-209-080		CAP, TC-U 0.1-50 F〈HE〉
C389	87-018-201-080		CAP, TC-U 5600P-16 X〈HE〉
C390	87-018-131-080		CAP, TC-U 1000P-50 B〈HE〉
C391	87-010-401-080		CAP, E 1-50 SME〈HE〉

REF. NO	PART NO.	ｶﾝﾘ NO.	DESCRIPTION
C392	87-018-213-080		CAP, TC-U 0.047-50F〈HE〉
C394	87-018-209-080		CAP, TC-U 0.1-50 F〈HE〉
CSA1	87-008-497-080		CERALOCK CST7.68MTW
FL1	82-VP3-615-010		FL, BJ189GK (DISPLAY)
L1	87-003-098-080		COIL, 2.2UH
L2	87-003-098-080		COIL, 2.2UH
L5	87-003-102-080		COIL, 10UH
SW1	87-036-215-080		SW, TACT EVQ-21404M
SW2	87-036-215-080		SW, TACT EVQ-21404M
SW3	87-036-215-080		SW, TACT EVQ-21404M
SW4	87-036-215-080		SW, TACT EVQ-21404M
SW5	87-036-215-080		SW, TACT EVQ-21404M
SW6	87-036-215-080		SW, TACT EVQ-21404M
SW7	87-036-215-080		SW, TACT EVQ-21404M
SW8	87-036-215-080		SW, TACT EVQ-21404M
SW9	87-036-215-080		SW, TACT EVQ-21404M
SW10	87-036-215-080		SW, TACT EVQ-21404M
SW11	87-036-215-080		SW, TACT EVQ-21404M
SW12	87-036-215-080		SW, TACT EVQ-21404M
SW13	87-036-215-080		SW, TACT EVQ-21404M
SW14	87-036-215-080		SW, TACT EVQ-21404M
SW15	87-036-215-080		SW, TACT EVQ-21404M
SW16	87-036-215-080		SW, TACT EVQ-21404M
SW17	87-036-215-080		SW, TACT EVQ-21404M
SW18	87-036-215-080		SW, TACT EVQ-21404M
SW19	87-036-215-080		SW, TACT EVQ-21404M
SW20	87-036-215-080		SW, TACT EVQ-21404M
SW21	87-036-215-080		SW, TACT EVQ-21404M
SW22	87-036-215-080		SW, TACT EVQ-21404M
SW23	87-036-215-080		SW, TACT EVQ-21404M
SW24	87-036-215-080		SW, TACT EVQ-21404M
SW25	87-036-215-080		SW, TACT EVQ-21404M
SW26	87-036-215-080		SW, TACT EVQ-21404M
SW27	87-036-215-080		SW, TACT EVQ-21404M
VR370	82-VP2-636-010		VR, SL 10KB〈HE〉
X301	87-008-496-080		CERALOCK CST2.0MG〈HE〉

VOLUME C.B

C201	87-010-405-080		CAP, E 10-50 SME
C202	87-010-405-080		CAP, E 10-50 SME
C203	87-010-404-080		CAP, E 4.7-50 SME
C204	87-010-404-080		CAP, E 4.7-50 SME
C205	87-010-404-080		CAP, E 4.7-50 SME
C206	87-010-404-080		CAP, E 4.7-50 SME
C210	87-018-134-080		CAP, TC-U 0.01-16 Y
VR1	82-VP2-639-010		VR, 50KB MOTOR (VOLUME)

AC C.B

R70	87-022-184-080		RES, METAL 0.33-1W
R96	87-022-200-080		RES, METAL 0.56-1W
R97	87-022-200-080		RES, METAL 0.56-1W

AC VOLTAGE C.B

	87-033-213-010		CLAMP, FUSE SMK〈HE, H〉
	82-304-743-010		TERMINAL, 1P
⚠F1	87-035-366-010		FUSE, 2.5A 250V T, E/K〈HE, H〉
⚠SW1	87-036-229-010		SW, SL DP3CRA〈HE, H〉

MISCELLANEOUS

⚠	87-050-034-010		AC CORD ASSY, E〈HE〉
⚠	87-050-016-010		AC CORD ASSY, E〈E, Z〉
⚠	87-050-029-010		AC CORD ASSY, K 3P〈K〉
⚠	87-034-749-010		AC CORD, H W/PLUG〈H〉
⚠	87-085-184-010		BUSHING, AC CORD D〈H〉
⚠	87-085-185-010		BUSHING, AC CORD E〈E, K, Z, HE〉
⚠PT1	82-VP2-624-010		PT, 2VP-2 E.K〈E, K, Z〉
⚠PT1	82-VP2-622-010		PT, 2VP-2 H〈HE, H〉

IC DESCRIPTION (MX−Z3000M)

IC, CXP82316

Pin No.	Pin Name	I/O	Description
1	I-$\overline{\text{HOLD}}$	I	HOLD mode at "Low" and normal mode at "High".
2	I-REMOTE	I	Remote control signal input.
3 ~ 5	NC	−	Not used.
6	O-CS (DSP)	O	Not used.
7	NC	−	Not used
8	O-CLK	O	Serial data clock signal. (4094)
9	O-CLK (GEQ)	O	Clock signal output for GEQ IC NJU7305.
10	O-DATA	O	Serial data output.
11	I/O-$\overline{\text{SERIAL}}$	I/O	Serial signal for system controller (8 bit).
12	O-STB	O	Strobe signal output. (4094)
13	NC	O	Not used.
14	O-$\overline{\text{S16}}$	O	FL display segment output.
15	O-$\overline{\text{S5}}$		
16	O-$\overline{\text{S28}}$		
17	O-$\overline{\text{S17}}$		
18	O-$\overline{\text{S6}}$		
19	O-$\overline{\text{S29}}$		
20	I-INTIAL	I	Initialize signal.
21	O-$\overline{\text{VOL LED}}$	O	VOL LED display output.
22	I-KEY1	I	Key A/D input.
23	I-KEY2	I	
24	NC	−	Not used.
25	I-KEY4	I	Key A/D input.
26	O-FS RESET	O	Output to reset output of IC BA3826.
27	I-SPE	I	Spectrum analyzer display input.
28	I-MIC	I	Mic signal input. Vocal fader turns on when this input is more than 3.4V in vocal fader mode.
29	NC	−	Not used.
30	$\overline{\text{RESET}}$	I	Reset signal for microcomputer.
31	E.XTAL	−	Crystal connection terminal for oscillating system clock. (7.68MHz)
32	XTAL	−	
33	VSS	−	GND.
34 ~ 60	O-S1 ~ O-S33	O	FL Display segment output. 37~39 pins are also used for band selection of spectrum analyzer.
61 ~ 70	O-G9 ~ O-G1	O	FL Display grid drive signal.
71	VFDP	I	Negative power supply (−30V).
72	VDD	−	Power supply (4.9V).
73	NC	−	Not used.
74	VOL UP	O	MOTOR VOL UP output.

Pin No.	Pin Name	I/O	Description
75	VOL DOWN	O	MOTOR VOL DOWN output.
76	O-MUTE	O	Audio MUTE output.
77	O-$\overline{\text{POWER}}$	O	Power ON/OFF control output.
78	I-GRID	I	GRID input for microcomputer extention.
79	I-G1	I	G1 input for microcomputer extention.
80	N C	–	Not used.

IC BLOCK DIAGRAM (MX-Z3000M)

IC, BA3826S

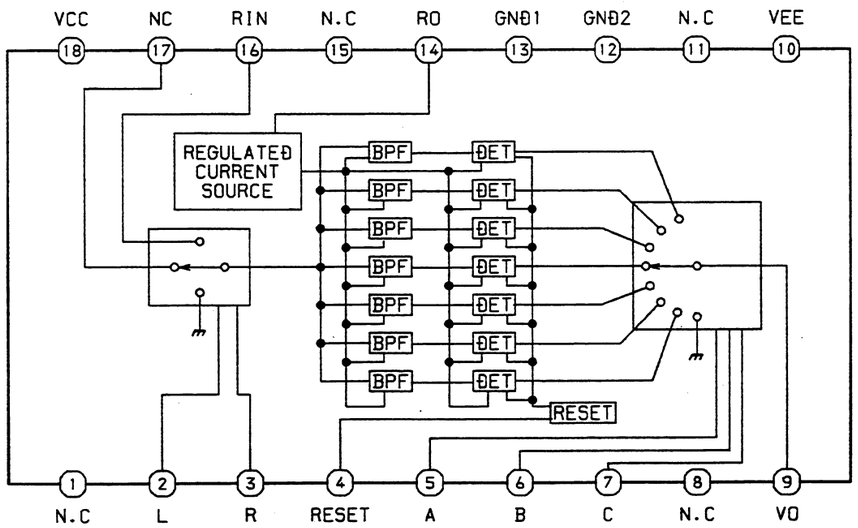

IC, NJU7305

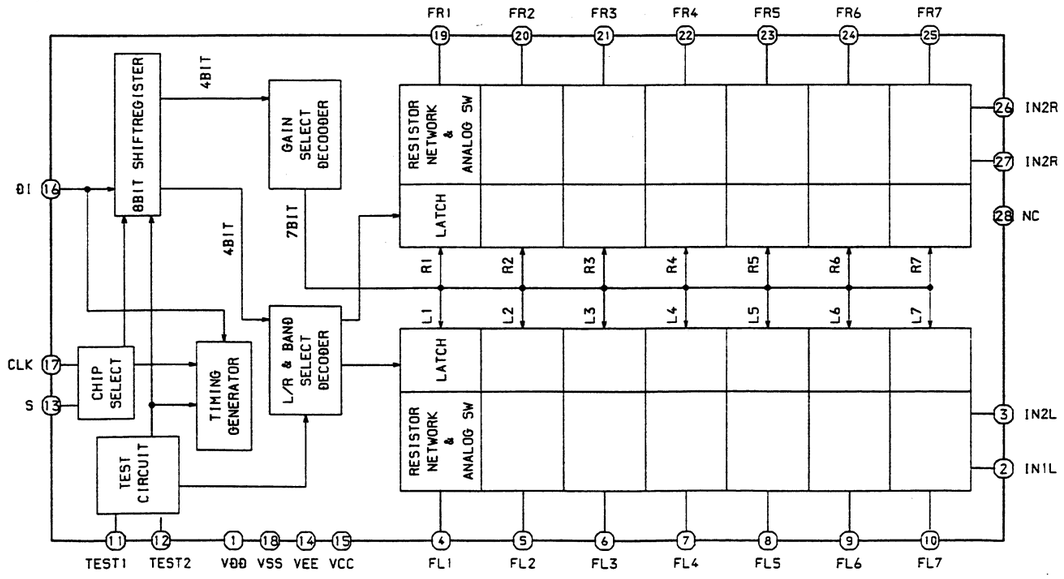

FL (MX-Z3000M)

FL, BJ189GK

GRID ASSIGNMENT

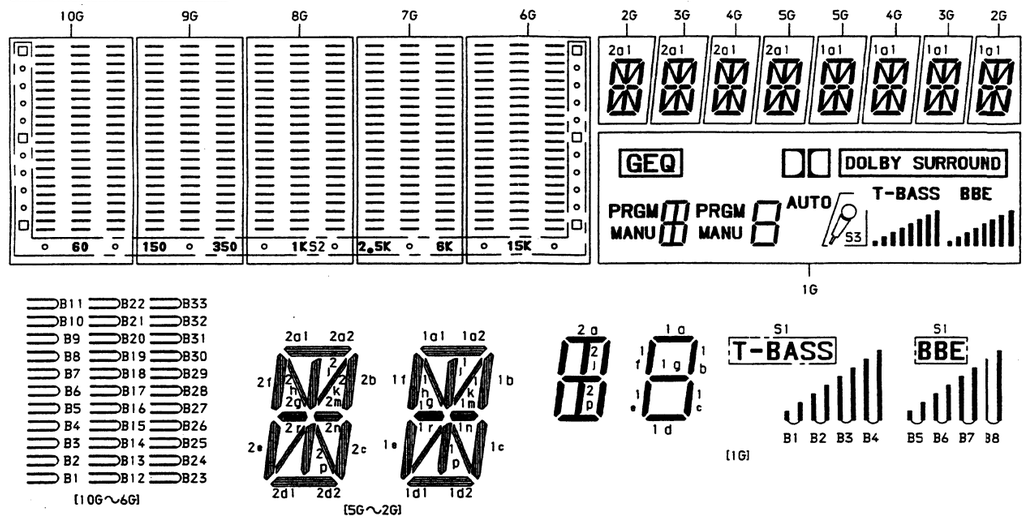

ANODE CONNECTION

	10G	9G	8G	7G	6G	5G	4G	3G	2G	1G
P1	B1	B1	B1	B1	B1	1a2	1a2	1a2	1a2	B6
P2	B2	B2	B2	B2	B2	1k	1k	1k	1k	B3
P3	B3	B3	B3	B3	B3	1g	1g	1g	1g	**SURROUND**
P4	B4	B4	B4	B4	B4	1e	1e	1e	1e	**AUTO**
P5	B5	B5	B5	B5	B5	1p	1p	1p	1p	1a, 1d
P6	B6	B6	B6	B6	B6	2d2	2d2	2d2	2d2	[GEQ]
P7	B7	B7	B7	B7	B7	2n	2n	2n	2n	2b
P8	B8	B8	B8	B8	B8	2c	2c	2c	2c	–
P9	B9	B9	B9	B9	B9	2f	2f	2f	2f	2d
P10	B10	B10	B10	B10	B10	2h	2h	2h	2h	**PRGM** [GEQ]
P11	B11	B11	B11	B11	B11	2a1	2a1	2a1	2a1	1f
P12	B12	B12	B12	B12	B12	1a1	1a1	1a1	1a1	B7
P13	B13	B13	B13	B13	B13	1h	1h	1h	1h	B4
P14	B14	B14	B14	B14	B14	1f	1f	1f	1f	B1
P15	B15	B15	B15	B15	B15	1c	1c	1c	1c	[DOLBY]
P16	B16	B16	B16	B16	B16	1n	1n	1n	1n	1b
P17	B17	B17	B17	B17	B17	1d2	1d2	1d2	1d2	1e
P18	B18	B18	B18	B18	B18	2p	2p	2p	2p	2c
P19	B19	B19	B19	B19	B19	2e	2e	2e	2e	**PRGM**
P20	B20	B20	B20	B20	B20	2g	2g	2g	2g	2g
P21	B21	B21	B21	B21	B21	2k	2k	2k	2k	2f
P22	B22	B22	B22	B22	B22	2a2	2a2	2a2	2a2	–
P23	B23	B23	B23	B23	B23	–	–	–	–	B8
P24	B24	B24	B24	B24	B24	1j	1j	1j	1j	B5
P25	B25	B25	B25	B25	B25	1b	1b	1b	1b	B2
P26	B26	B26	B26	B26	B26	1m	1m	1m	1m	S3
P27	B27	B27	B27	B27	B27	1r	1r	1r	1r	1c
P28	B28	B28	B28	B28	B28	1d1	1d1	1d1	1d1	1g
P29	B29	B29	B29	B29	B29	2d1	2d1	2d1	2d1	2a
P30	B30	B30	B30	B30	B30	2r	2r	2r	2r	**MANU**
P31	B31	B31	B31	B31	B31	2m	2m	2m	2m	2j, 2p
P32	B32	B32	B32	B32	B32	2b	2b	2b	2b	2e
P33	B33	B33	B33	B33	B33	2j	2j	2j	2j	**MANU** [GEQ]
P34	S2	S2	S2	S2	S2	–	–	–	–	–
P35	–	–	–	–	–	–	–	–	–	**GEQ** S1

WIRING — 1 (MX-Z3000M)

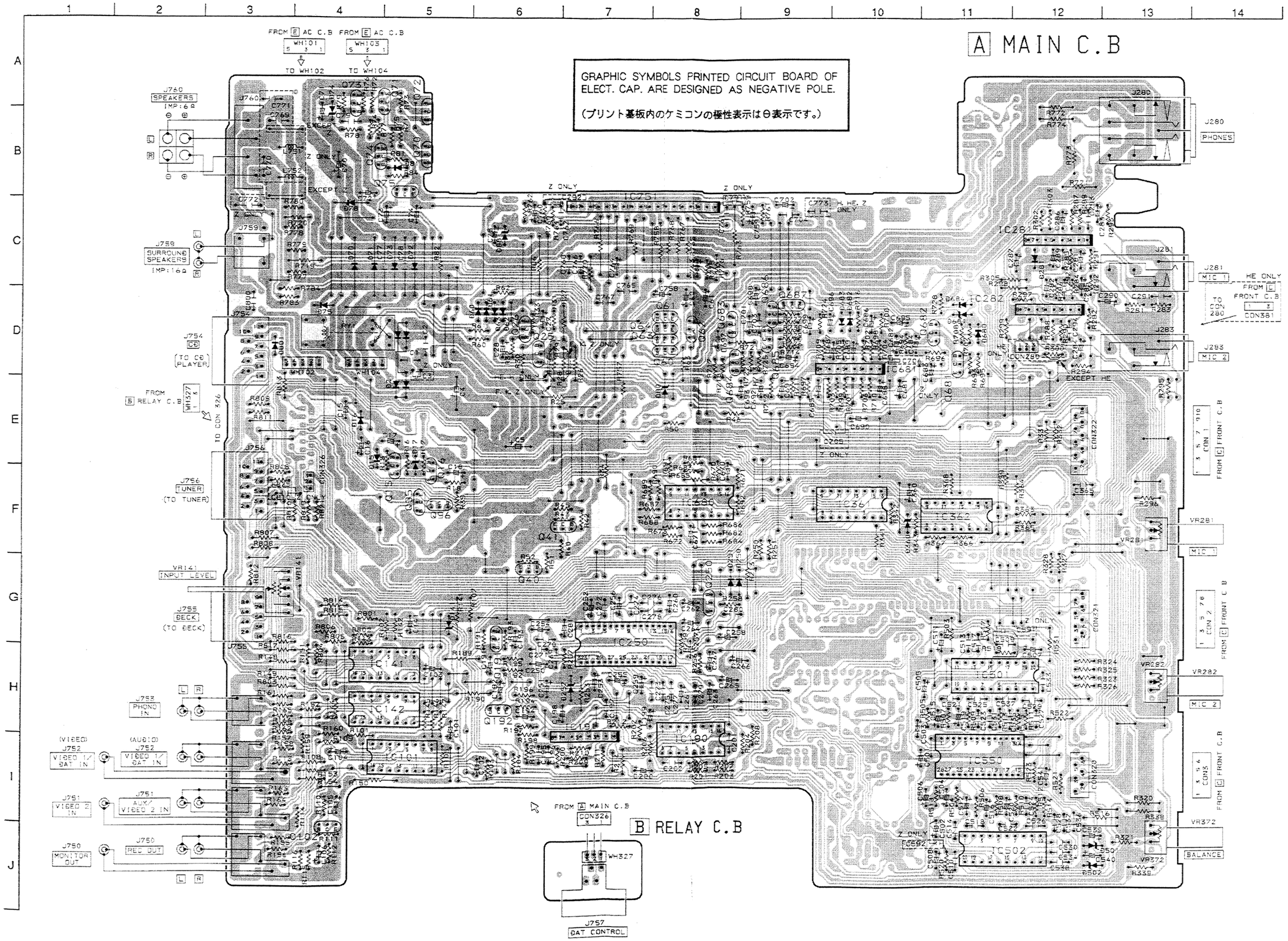

SCHEMATIC DIAGRAM — 1 (MX-Z3000M)

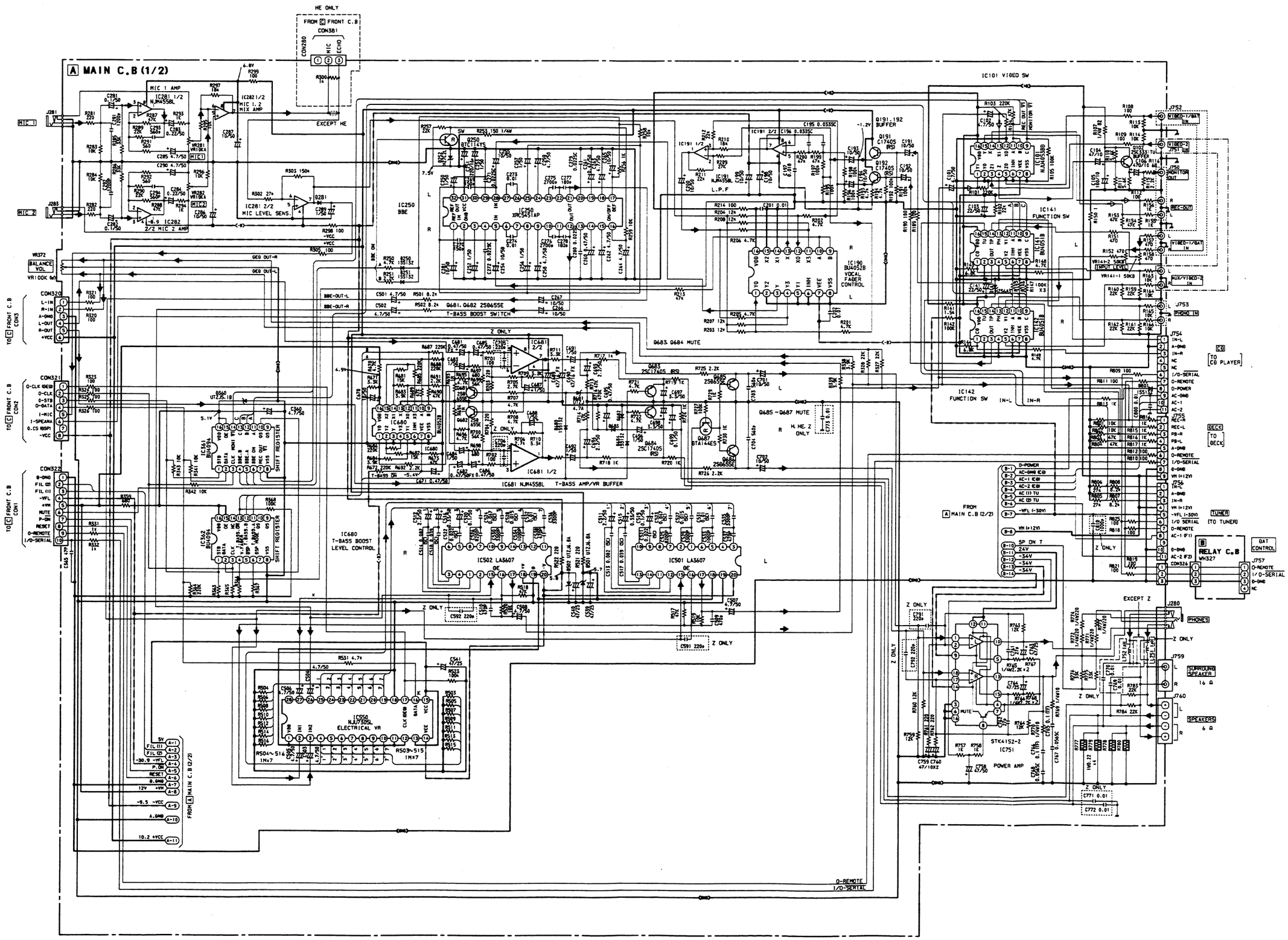

BLOCK DIAGRAM (MX-Z3000M)

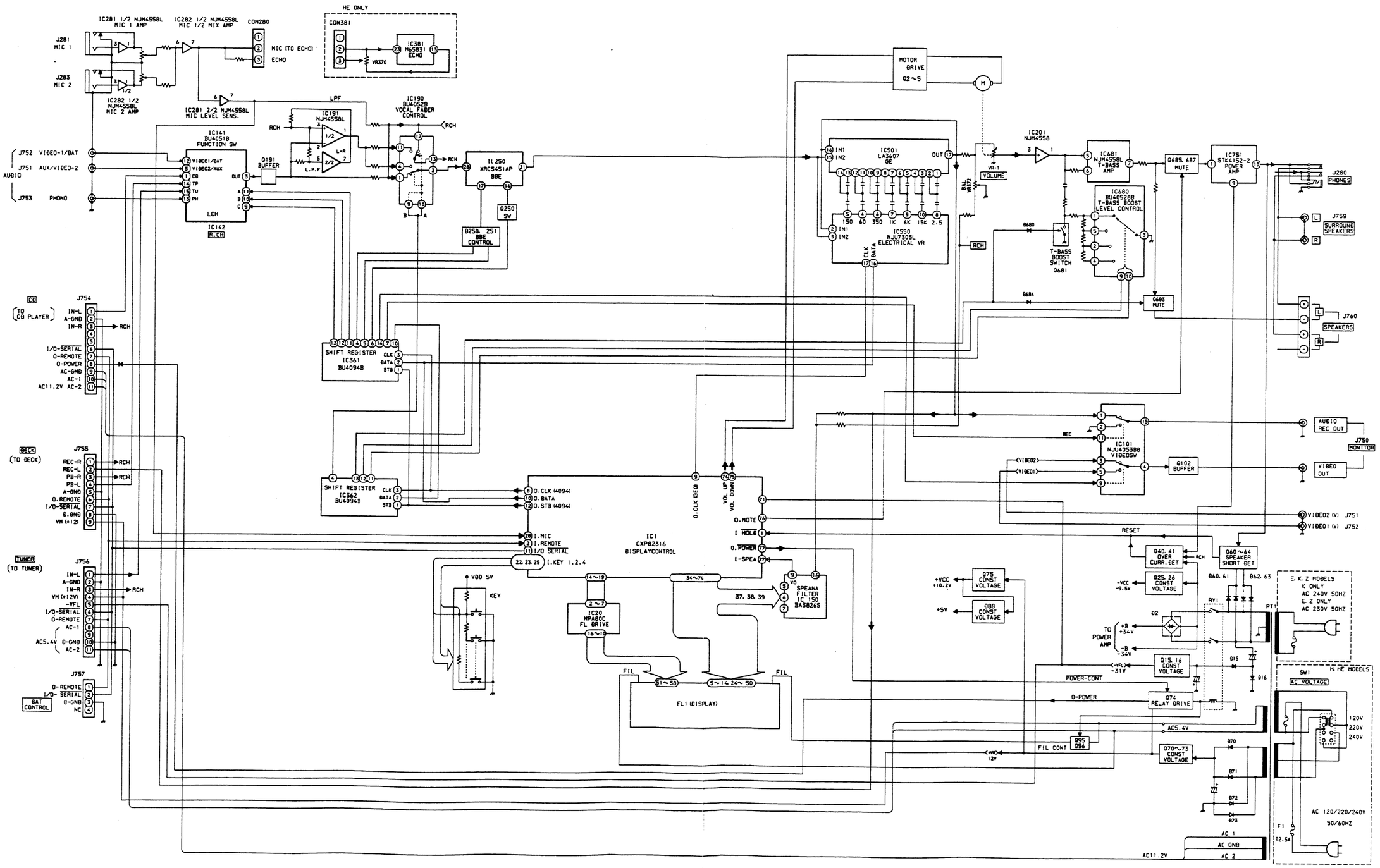

SCHEMATIC DIAGRAM — 2 (MX-Z3000M)

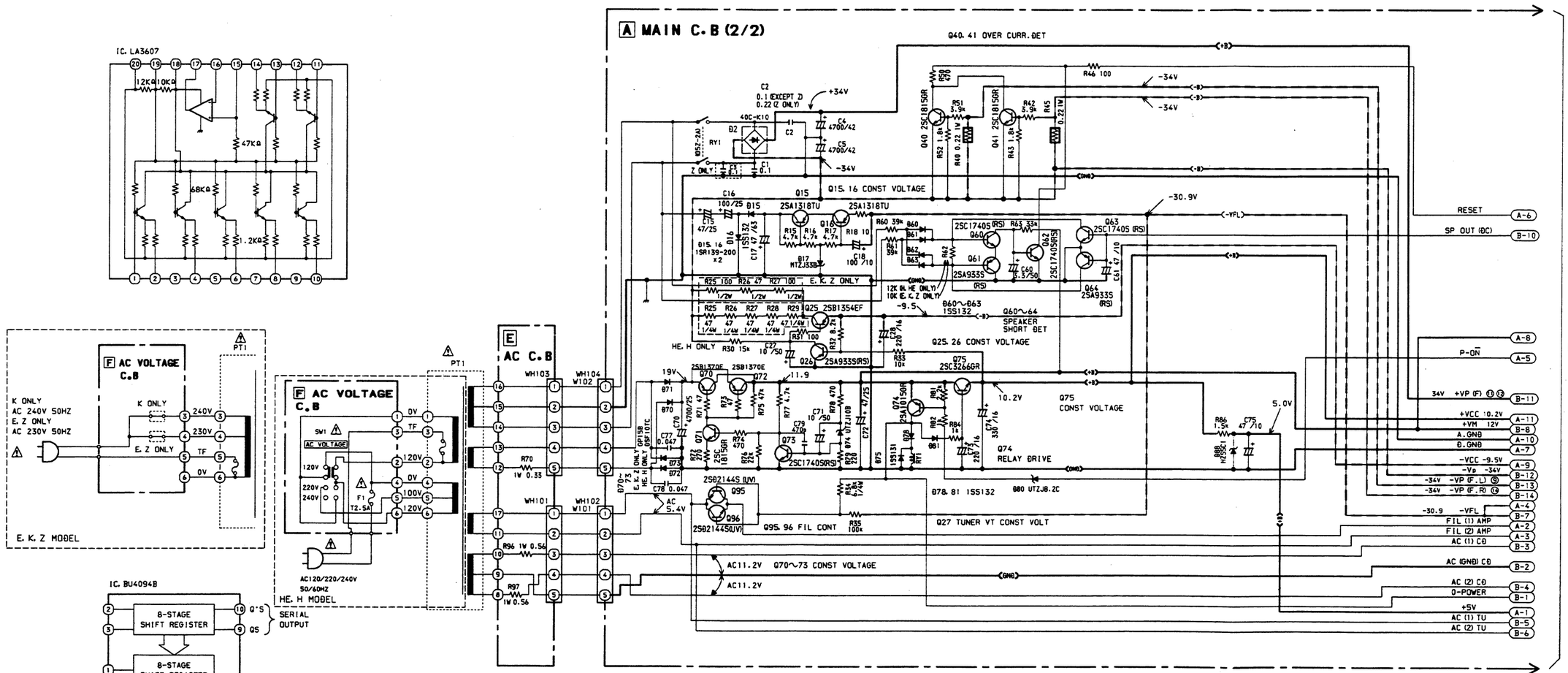

IC. BU4094B TRUTH TABLE

CLOCK	OUTPUT OUTPUT	STROBE	DATA	PARALLEL OUTPUTS Q1	PARALLEL OUTPUTS Q2	SERIAL OUTPUTS QS	SERIAL OUTPUTS QS
↑	L	X	X	Z	Z	Q7	NO CHG.
↓	L	X	X	Z	Z	NO CHG.	QS
↑	H	L	X	NO CHG.	NO CHG.	Q7	NO CHG.
↑	H	H	L	L	Qn-1	Q7	NO CHG.
↑	H	H	H	H	Qn-1	Q7	NO CHG.
↓	H	X	X	NO CHG.	NO CHG.	NO CHG.	QS

Z=HIGH IMPEDANCE
X=DON'T CARE

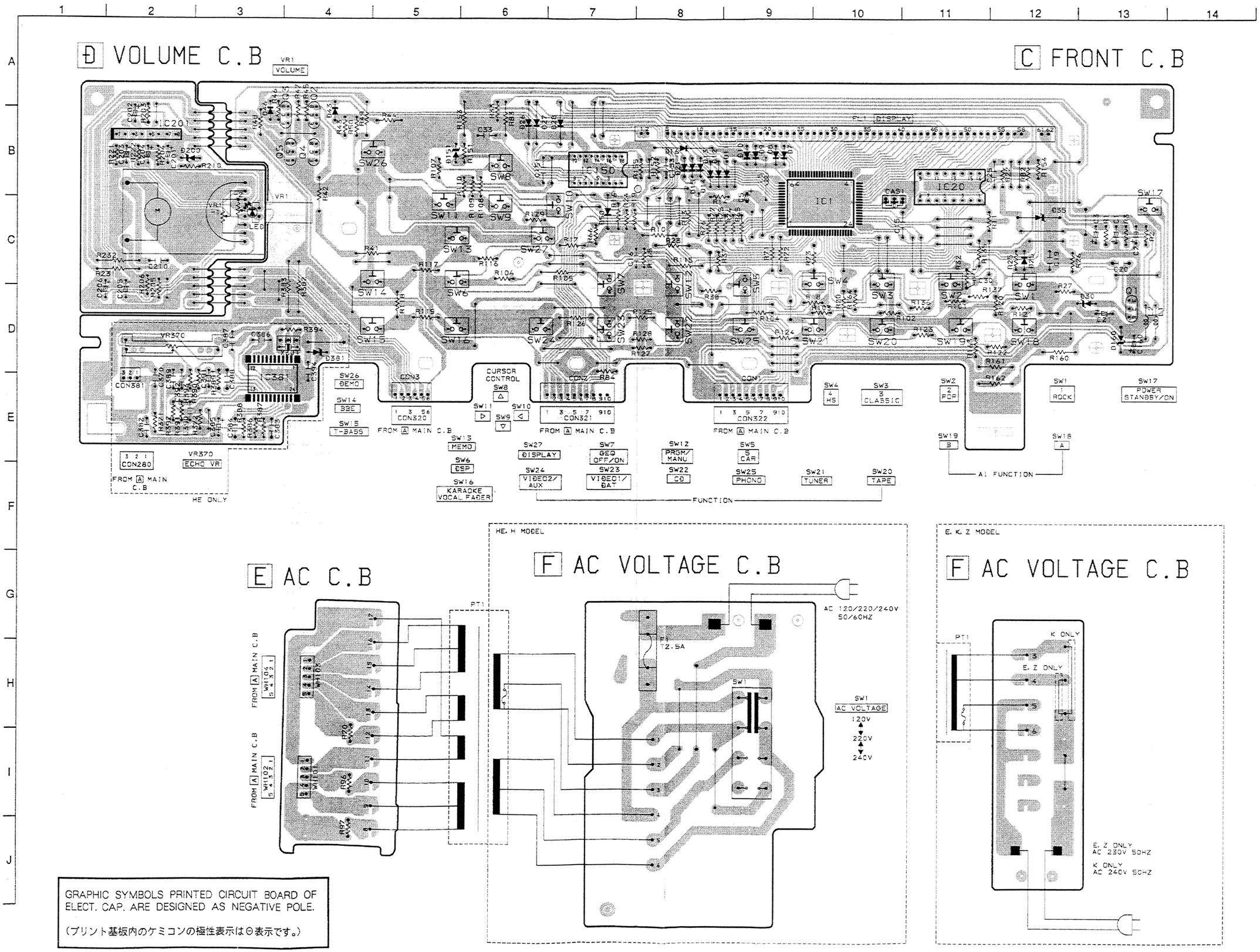

GRAPHIC SYMBOLS PRINTED CIRCUIT BOARD OF ELECT. CAP. ARE DESIGNED AS NEGATIVE POLE.

（プリント基板内のケミコンの極性表示は⊖表示です。）

SCHEMATIC DIAGRAM — 3 (MX-Z3000M)

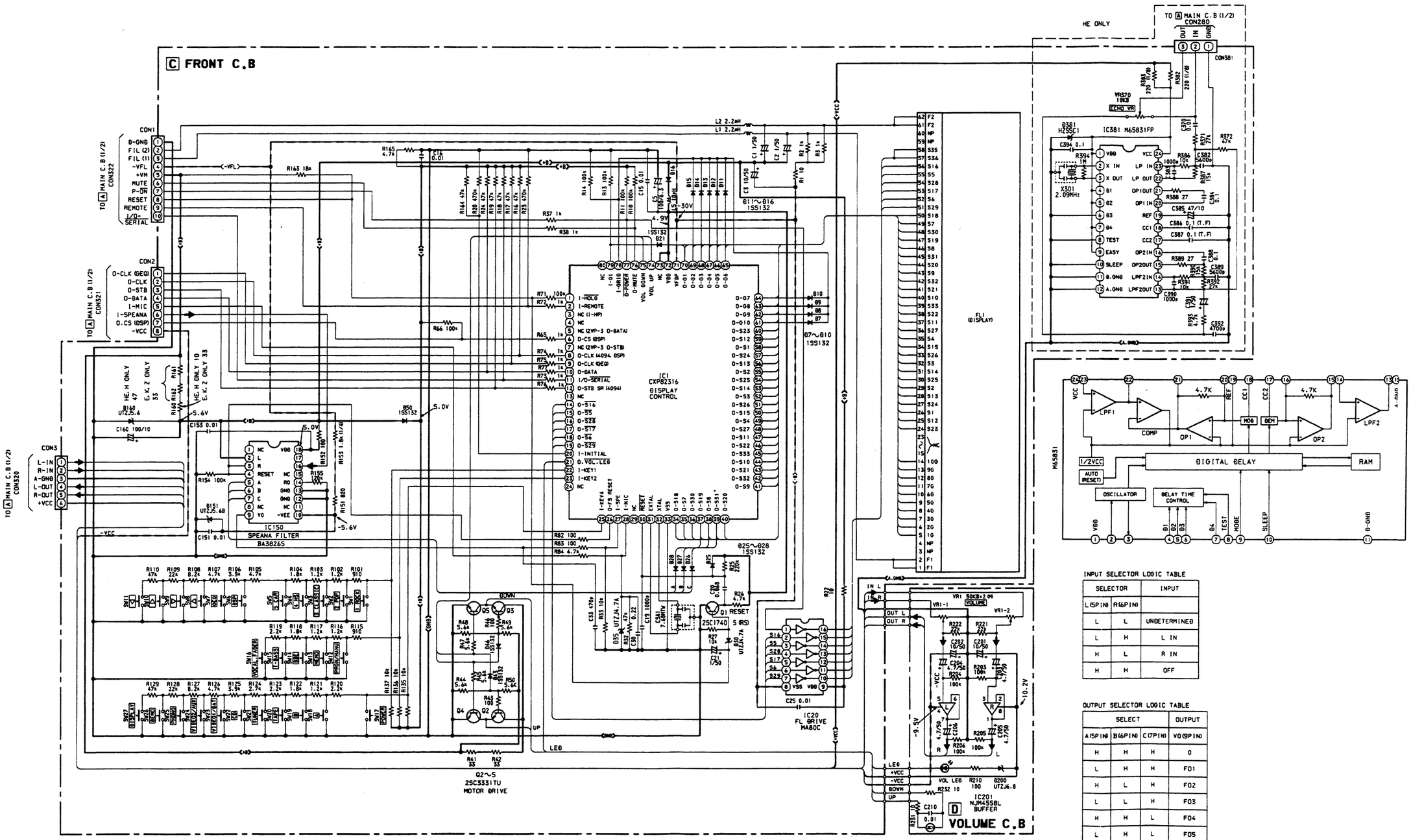

INPUT SELECTOR LOGIC TABLE

SELECTOR		INPUT
L(5PIN)	R(6PIN)	
L	L	UNDETERMINED
L	H	L IN
H	L	R IN
H	H	OFF

OUTPUT SELECTOR LOGIC TABLE

SELECT			OUTPUT
A(5PIN)	B(6PIN)	C(7PIN)	VO(9PIN)
H	H	H	0
L	H	H	F01
H	L	H	F02
L	L	H	F03
H	H	L	F04
L	H	L	F05
H	L	L	F06
L	L	L	F07

EXPLODED VIEW (MX-Z3000M)

REF.	PART NO.	DESCRIPTION
A	87-067-641-019	UTT2+3-8 W/O SLOT BLK
B	87-067-660-019	BVT2+3-8 W/O SLOT BLK
C	87-067-758-019	BVT2+3-12 W/O SLOT
D	87-067-584-019	BVT2+3-6 ﾐｿﾅｼ
E	87-067-581-019	BVT2+3-15 W/O SLOT
F	87-591-094-419	QITT+3-6 GOLD
G	87-067-716-019	BVTT+3-6 BLK
H	87-078-019-019	S-SCREW, IT+4-6
I	87-067-747-019	W, 4.3-14-1
J	87-067-585-019	BVTT+4-6

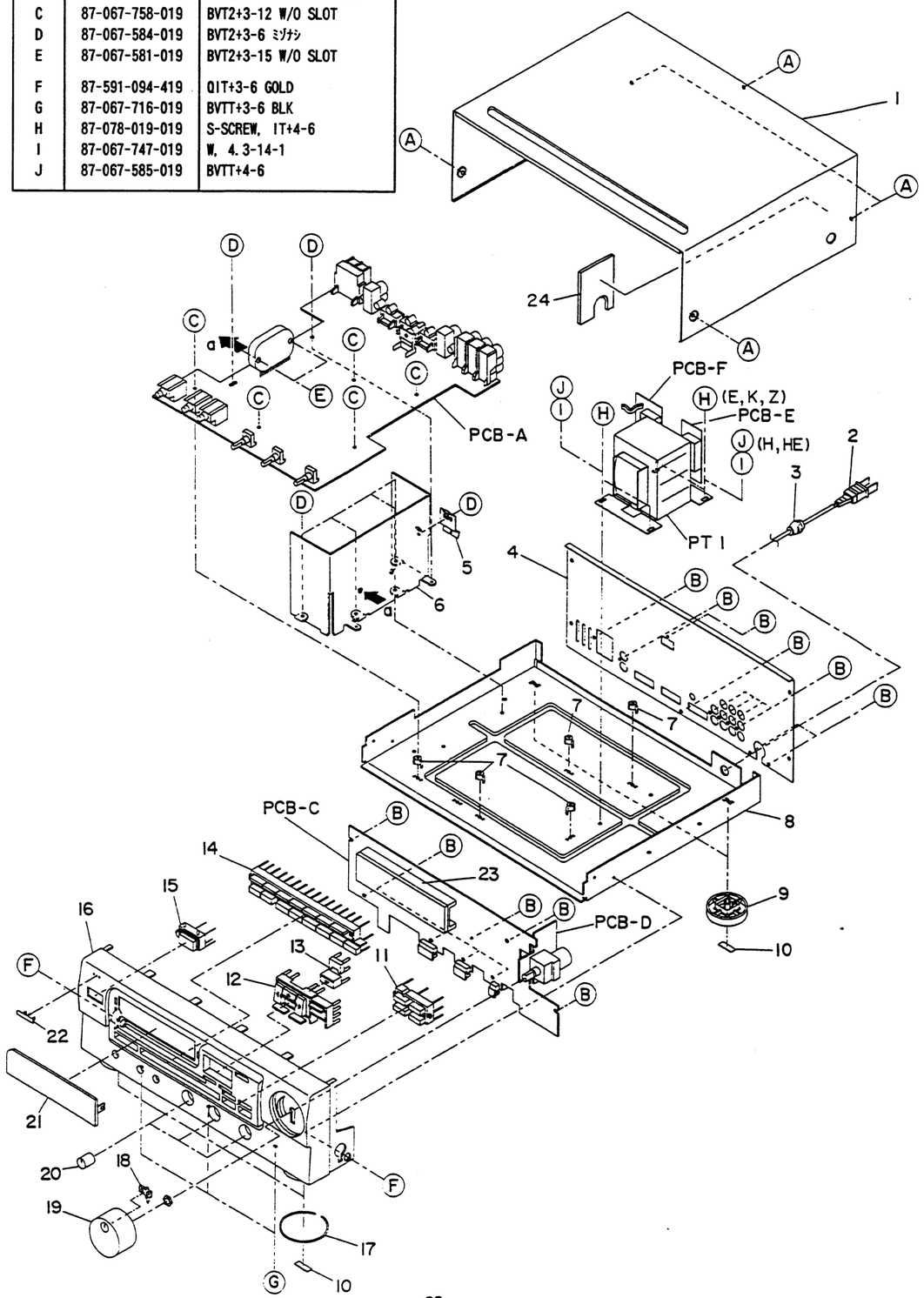

MECHANICAL PARTS LIST (MX-Z3000M)

DESCRIPTIONで判断できない物は "REFERENCE NAME LIST" を参照してください。
If can't understand for Description please kindly refer to "REFERENCE NAME LIST".

PART NO. CHANGED TO	REF. NO.	PART NO.	DESCRIPTION	COMMON MODEL	Q,TY
	1	★82-VP2-011-019	CAB, STEEL (H, HE, E, K, Z)		1
	1	★82-VP1-016-018	CAB, STEEL G (EE)		1
	2	★87-034-749-019	AC CORD, H W/PLUG (H)		1
	2	★87-050-034-019	AC CORD ASSY, E (HE, E, Z)		1
	2	★87-050-016-018	AC CORD ASSY, E (EE)		1
	2	★87-050-032-018	AC CORD ASSY, K 3P S (K)		1
	3	★87-085-184-010	BUSHING, AC CORD D (H)		1
	3	★87-085-185-010	BUSHING, AC CORD E (HE, E, EE, K, Z)		1
	4	★82-VP3-006-019	PANEL, REAR HJBN (H)	※	1
	4	★82-VP3-005-019	PANEL, REAR HEJBN (HE)	※	1
	4	★82-VP3-013-019	PANEL, REAR EBN (E)	※	1
	4	★82-VP3-007-019	PANEL, REAR EBNE (EE)	※	1
	4	★82-VP3-014-019	PANEL, REAR KBN (K)	※	1
	4	★82-VP3-015-019	PANEL, REAR ZBN (Z)	※	1
	5	---	HLDR, IC		1
	6	---	HT－SINK, 110		1
	7	---	HLDR, PCB 6.0		5
	8	---	CHAS, MAIN		1
	9	★81-VX1-012-019	FOOT, REAR		2
	10	★82-VW2-211-019	FELT, 20－7.5－2		4
	11	★82-VP3-004-019	KEY, BBE	※	1
	12	★82-VP2-004-019	KEY, CRSR		1
	13	★82-VP2-005-019	KEY, CRSR DOWN		1
	14	★82-VP2-003-119	KEY, FUN		1
	15	★82-VP2-002-019	KEY, POWER		1
	16	★82-VP3-002-019	CAB, FR LH (H)	※	1
	16	★82-VP3-001-019	CAB, FR H (HE)	※	1
	16	★82-VP3-003-019	CAB, FR EX (E, EE, K, Z)	※	1
	17	★81-VW1-015-019	RING FOOT		2
	18	★82-MA2-026-019	IND, VOL		1
	19	★82-MA2-023-019	KNOB, VOL		1
	20	★81-VP1-005-019	KNOB, BBE		3
	21	★82-VP2-007-019	WINDOW, AMP		1
	22	★81-DS1-011-019	BADGE, AIWA N		1
	23	★82-VP2-203-019	GUIDE, FL		1
	24	★82-VP2-206-019	SH, CAB STEEL (HE)		1

MODEL NO.

FX-WZ5000

CAUTIONS WHEN SERVICING (FX-WZ5000)

Model FX-WZ5000 does not have a power supply circuit. Power is supplied to it through a 9-pin flat cable and the signal inputs/outputs are also perfomed through this cable.
When servicing the FX-WZ5000 connect it to the MX-Z3000M so power is supplied to the FX-WZ5000. If the MX-Z3000M is not available, follow the procedure below.

[When servicing the unassembled FX-WZ5000]

①Supply the following voltages to each terminal from an external power supply.

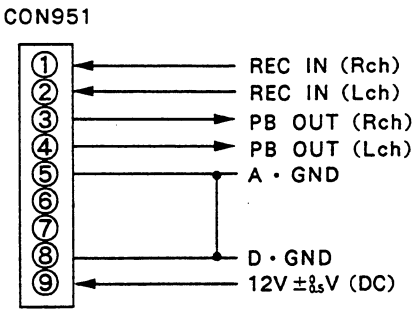

②Connection diagram when using multi power supply. (LPS-9088)

• Connect a multi-conversion harness for the D5 type to J1.

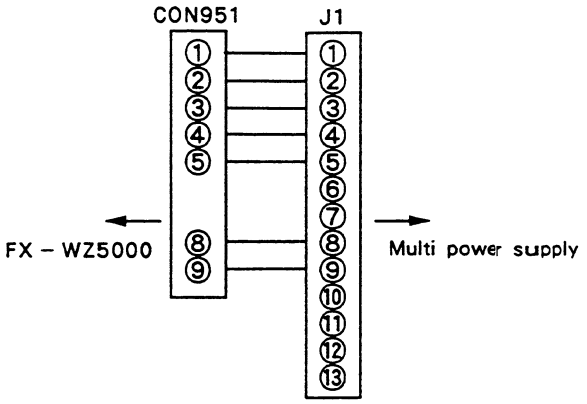

Connect a multi-conversion harness

• After connecting the multi-conversion harness, connect the leg of the diode D803 on the pattern of the main C.B and then turn the multi-power supply on.

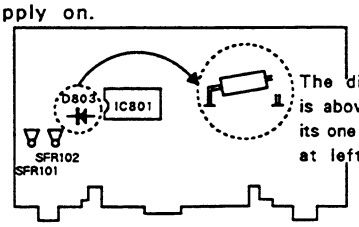

The diode D803 itself is above the pattern with its one leg is cut as shown at left.

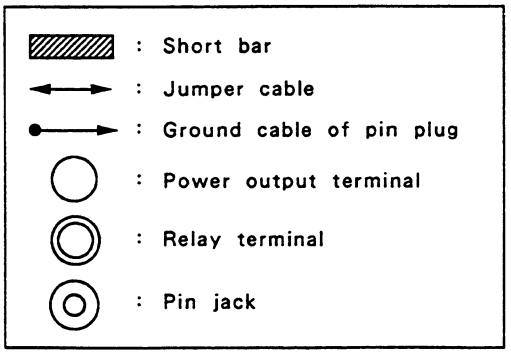

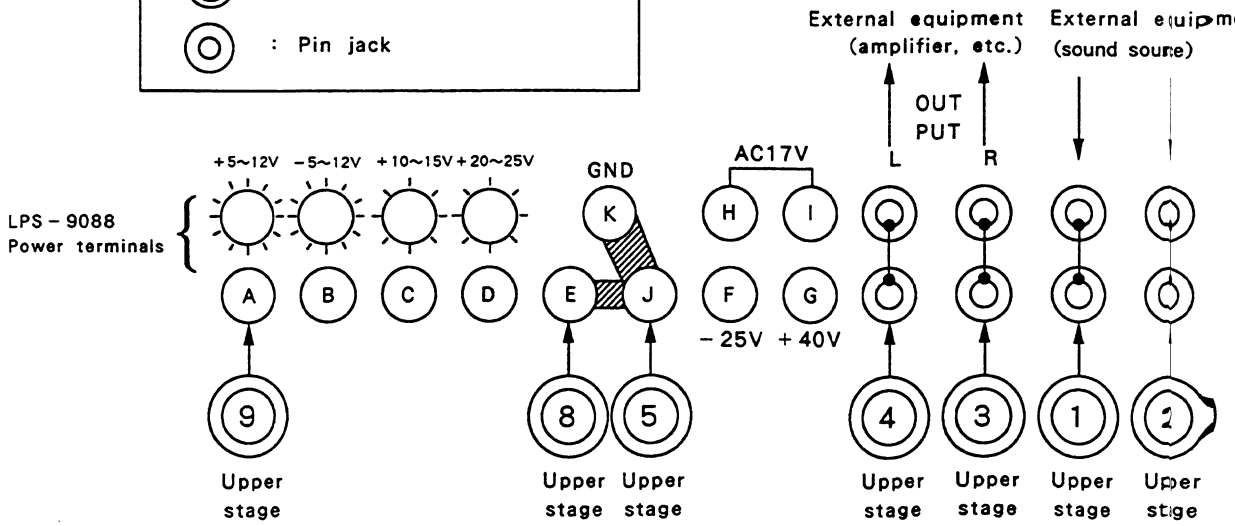

ELECTRICAL MAIN PARTS LIST (FX－WZ5000)

DESCRIPTIONで判断できない物は "REFERENCE NAME LIST" を参照してください。
If can't understand for Description please kindly refer to "REFERENCE NAME LIST".

REF. NO	PART NO.	カンリ NO.	DESCRIPTION
IC			
	87-002-444-010		IC, BU4094B
	87-001-874-010		IC, HA12134A
	87-001-334-010		IC, LB9051A
	82-VW2-631-010		IC, LC66406-4B19
	87-017-022-080		IC, NJM2068M-D (T1)
	87-001-607-080		IC, NJM4558M
	87-017-023-080		IC, NJU4052BM
	87-001-224-080		IC, NJU4066BM
	87-020-730-080		IC, TC4069UBF
TRANSISTOR			
	89-503-685-089		C-FET, 2SK368GR
	87-026-223-089		C-TR, DTC143TK
	89-113-625-080		C-TR, 2SA1362GR
	89-327-125-080		C-TR, 2SC2712GR
	89-333-266-080		C-TR, 2SC3326B
	87-026-227-080		C-TR, DTA114EK
	87-026-580-080		C-TR, DTA123JK
	87-026-210-080		C-TR, DTC144EK
	89-112-965-080		TR, 2SA1296GR
	87-026-463-080		TR, 2SA933S (RS)
	89-109-521-080		TR, 2SA952K
	89-318-155-080		TR, 2SC1815GR
	89-320-011-080		TR, 2SC2001K
	87-026-214-080		TR, DTA114YS
	87-026-218-080		TR, DTC144ES
DIODE			
	87-017-024-080		C-DIODE, DA204K
	87-020-331-080		C-DIODE, DAN202K
	87-020-330-080		C-DIODE, DAP202K
	87-001-559-050		DIODE, 1SS131 RA
	87-002-564-080		DIODE, 1SS133 RA
	87-020-123-080		DIODE, DS446
	87-020-109-019		LED, SLF-201C〈YJ〉
	87-001-290-050		ZENER, HZS6B1L RA
	87-001-731-050		ZENER, HZS6C2L RA
	87-020-584-080		ZENER, 02CZ5.6Y
MAIN C.B			
C101	87-012-158-080		C-CAP, S 390P-50 CH
C102	87-012-158-080		C-CAP, S 390P-50 CH
C103	87-010-318-080		C-CAP, S 47P-50 CH
C104	87-010-318-080		C-CAP, S 47P-50 CH
C105	87-010-426-080		C-CAP, S 0.012-25 B
C106	87-010-426-080		C-CAP, S 0.012-25 B
C109	87-012-154-080		C-CAP, S 150P-50 CH
C110	87-012-154-080		C-CAP, S 150P-50 CH
C111	87-010-404-080		CAP, E 4.7-50 SME
C112	87-010-404-080		CAP, E 4.7-50 SME
C113	87-010-404-080		CAP, E 4.7-50 SME
C114	87-010-404-080		CAP, E 4.7-50 SME
C115	87-010-101-080		CAP, E 220-16 SME
C116	87-010-197-080		C-CAP, S 0.01-25 B
C117	87-010-197-080		C-CAP, S 0.01-25 B
C201	87-012-157-080		C-CAP, S 330P-50 CH
C202	87-012-157-080		C-CAP, S 330P-50 CH
C203	87-010-318-080		C-CAP, S 47P-50 CH
C204	87-010-318-080		C-CAP, S 47P-50 CH
C205	87-010-426-080		C-CAP, S 0.012-25 B
C206	87-010-426-080		C-CAP, S 0.012-25 B
C207	87-012-156-080		C-CAP, S 220P-50 CH
C208	87-012-156-080		C-CAP, S 220P-50 CH
C211	87-010-404-080		CAP, E 4.7-50 SME
C212	87-010-404-080		CAP, E 4.7-50 SME
C213	87-010-101-080		CAP, E 220-16 SME
C214	87-010-197-080		C-CAP, S 0.01-25 B
C215	87-010-197-080		C-CAP, S 0.01-25 B
C251	87-010-186-080		C-CAP, S 4700P-50 B
C252	87-010-149-080		C-CAP, S 5P-50 CH
C253	87-010-182-080		C-CAP, S 2200P-50 B
C254	87-010-596-080		C-CAP, S 0.047-16 RK
C255	87-012-154-080		C-CAP, S 150P-50 CH
C256	87-010-374-080		CAP, E 47-10
C257	87-010-401-080		CAP, E 1-50 SME
C258	87-010-149-080		C-CAP, S 5P-50 CH
C259	87-010-178-080		C-CAP, S 1000P-50 B
C301	87-010-322-080		C-CAP, S 100P-50 CH
C302	87-010-322-080		C-CAP, S 100P-50 CH
C303	87-010-183-080		C-CAP, S 2700P-50 B
C304	87-010-183-080		C-CAP, S 2700P-50 B
C305	87-010-404-080		CAP, E 4.7-50 SME
C306	87-010-404-080		CAP, E 4.7-50 SME
C323	87-012-157-080		C-CAP, S 330P-50 CH
C324	87-012-157-080		C-CAP, S 330P-50 CH
C401	87-012-156-080		C-CAP, S 220P-50 CH
C402	87-012-156-080		C-CAP, S 220P-50 CH
C403	87-014-071-080		CAP, PP 3900P-100 J
C405	87-010-221-080		CAP, E 470-10
C409	87-010-402-080		CAP, E 2.2-50 SME
C451	87-010-178-080		C-CAP, S 1000P-50 B
C453	87-010-322-080		C-CAP, S 100P-50 CH
C454	87-010-322-080		C-CAP, S 100P-50 CH
C501	87-012-140-080		C-CAP, S 470P-50 CH
C502	87-012-140-080		C-CAP, S 470P-50 CH
C503	87-010-182-080		C-CAP, S 2200P-50 B
C504	87-010-182-080		C-CAP, S 2200P-50 B
C505	87-010-404-080		CAP, E 4.7-50 SME
C506	87-010-404-080		CAP, E 4.7-50 SME
C511	87-010-545-080		CAP, E 0.22-50 SME
C512	87-010-545-080		CAP, E 0.22-50 SME
C517	87-010-371-080		CAP, E 470-6.3
C518	87-010-401-080		CAP, E 1-50 SME
C519	87-010-404-080		CAP, E 4.7-50 SME
C520	87-010-404-080		CAP, E 4.7-50 SME
C601	87-010-404-080		CAP, E 4.7-50 SME
C602	87-010-381-080		CAP, E 330-16 SME
C603	87-010-101-080		CAP, E 220-16 SME
C604	87-010-237-080		CAP, E 1000-16
C605	87-010-198-080		C-CAP, S 0.022-25 B
C606	87-010-546-080		CAP, E 0.33-50 SME
C607	87-010-371-080		CAP, E 470-6.3
C608	87-010-198-080		C-CAP, S 0.022-25 B
C609	87-015-822-080		C-CAP, 0.022
C801	87-010-404-080		CAP, E 4.7-50 SME
C951	87-012-140-080		C-CAP, S 470P-50 CH
C952	87-010-186-080		C-CAP, S 4700P-50 B
CF801	89-MX1-704-080		CERA LOCK (MU) 3.9MHZ
L301	87-005-525-080		COIL, 22MH-J
L302	87-005-525-080		COIL, 22MH-J
L303	87-003-131-080		COIL, 10MH J
L304	87-003-131-080		COIL, 10MH J
L305	87-003-123-080		COIL, 2.2MH J
L306	87-003-123-080		COIL, 2.2MH J
L401	80-VW1-605-010		COIL, OSC BIAS 108K
L601	87-005-474-080		COIL, 12UH J FLR50
R408	87-025-471-080		RES, NF 4.7-1/4W J
SFR101	87-024-349-080		SFR, 1K DIA6 H
SFR102	87-024-349-080		SFR, 1K DIA6 H
SFR201	87-024-349-080		SFR, 1K DIA6 H
SFR202	87-024-349-080		SFR, 1K DIA6 H
SFR301	87-024-353-080		SFR, 10K DIA6 H
SFR302	87-024-353-080		SFR, 10K DIA6 H
SFR401	87-024-356-080		SFR, 47K DIA6 H
SFR402	87-024-356-080		SFR, 47K DIA6 H

REF. NO	PART NO.	ｶﾝﾘ NO.	DESCRIPTION
FRONT-1 C. B			
S905	87-036-215-080		SW, TACT EVQ-21404M (STOP)
S906	87-036-215-080		SW, TACT EVQ-21404M (F. FWD)
S907	87-036-215-080		SW, TACT EVQ-21404M (PLAY)
S908	87-036-215-080		SW, TACT EVQ-21404M (REW)
FRONT-2 C. B			
C901	87-010-405-080		CAP, E 10-50 SME
C902	87-018-134-080		CAP, TC-U 0. 01-16 Y
D901	81-DS2-639-080		LED, SEL-1321G TP7 (DECK 1)
D902	81-DS2-639-080		LED, SEL-1321G TP7 (DECK 1)
D903	81-DS2-639-080		LED, SEL-1321G TP7 (DECK 2)
D904	81-DS2-639-080		LED, SEL-1321G TP7 (DECK 2)
D905	81-DS2-639-080		LED, SEL-1321G TP7 (DOLBY NR)
D907	81-DS2-639-080		LED, SEL-1321G TP7 (DECK 2)
D908	81-DS2-639-080		LED, SEL-1321G TP7 (REVERSE)
D909	81-DS2-639-080		LED, SEL-1321G TP7 (MODE)
D910	87-017-295-080		LED, SEL-1921D TP7 (PAUSE)
D911	81-DS2-637-080		LED, SEL-1121R TP7 (REC/MUTE)
D912	81-DS2-637-080		LED, SEL-1121R TP7 (CD S REC)
D913	81-DS2-637-080		LED, SEL-1121R TP7 (SYNC DUB)
S901	87-036-215-080		SW, TACT EVQ-21404M (CD S RE)
S902	87-036-215-080		SW, TACT EVQ-21404M (NORMAL)
S903	87-036-215-080		SW, TACT EVQ-21404M (HIGH)
S904	87-036-215-080		SW, TACT EVQ-21404M (DOLBY)
S909	87-036-215-080		SW, TACT EVQ-21404M (REV MD)
S912	87-036-215-080		SW, TACT EVQ-21404M (REC/MUT)
S913	87-036-215-080		SW, TACT EVQ-21404M (REW/MS)
S914	87-036-215-080		SW, TACT EVQ-21404M (PB/DIR)
S915	87-036-215-080		SW, TACT EVQ-21404M (MS/FF)
S916	87-036-215-080		SW, TACT EVQ-21404M (STOP)
S917	87-036-215-080		SW, TACT EVQ-21404M (PAUSE)

REF. NO	PART NO.	ｶﾝﾘ NO.	DESCRIPTION
DECK-1 C. B			
M1	87-045-348-010		MOT, SHW 2L 70
PIN701	87-009-236-010		CONN, 8P PH H
SFR1	87-024-170-080		SFR, 3. 3K DIA 6V
SFR2	87-024-171-080		SFR, 4. 7K DIA 6V
SOL1	82-ZM1-618-010		SOL ASSY, 27
SW4	87-036-110-010		SW, PUSH SPPB 62 (CR02)
SW5	87-036-110-010		SW, PUSH SPPB 62 (CST)
SW6	87-036-110-010		SW, PUSH SPPB 62 (STOP)
DECK-2 C. B			
M2	87-045-348-010		MOT, SHW 2L 70
PIN702	87-009-752-010		CONN, 11P PH H WHT
SFR1	87-024-170-080		SFR, 3. 3K DIA 6V
SFR2	87-024-171-080		SFR, 4. 7K DIA 6V
SOL2	82-ZM1-618-010		SOL ASSY, 27
SW1	87-036-110-010		SW, PUSH SPPB 62 (MT)
SW2	87-036-110-010		SW, PUSH SPPB 62 (REC B)
SW3	87-036-110-010		SW, PUSH SPPB 62 (REC A)
SW4	87-036-110-010		SW, PUSH SPPB 62 (CR02)
SW5	87-036-110-010		SW, PUSH SPPB 62 (CST)
SW6	87-036-110-010		SW, PUSH SPPB 62 (STOP)
RELAY-1 C. B			
RELAY-2 C. B			
MISCELLANEOUS			
PH	87-046-355-010		HEAD, PH HADKH2529B (01)
RPH	87-046-356-010		HEAD, RPH HADKH5581B (D2)

○チップ抵抗部品コード／CHIP RESISTOR PART CODE

チップ抵抗部品コードの成り立ち
Chip resistor part coding

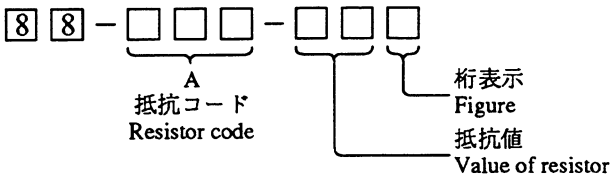

チップ抵抗
Chip resistor

Wattage 容量	Type 種類	Tolerance 許容誤差	Symbol 記号	Dimensions／寸法 (mm) Form/外形	L	W	t	Resistor code : A 抵抗コード : A
1/32W	1608	±5%	CJ	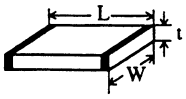	1.6	0.8	0.35	108
1/10W	2125	±5%	CJ		2	1.25	1.45	118
1/8W	3216	±5%	CJ		3.2	1.6	0.5 ～0.7	128

IC BLOCK DIAGRAM (FX-WZ5000)

IC, HA12134A

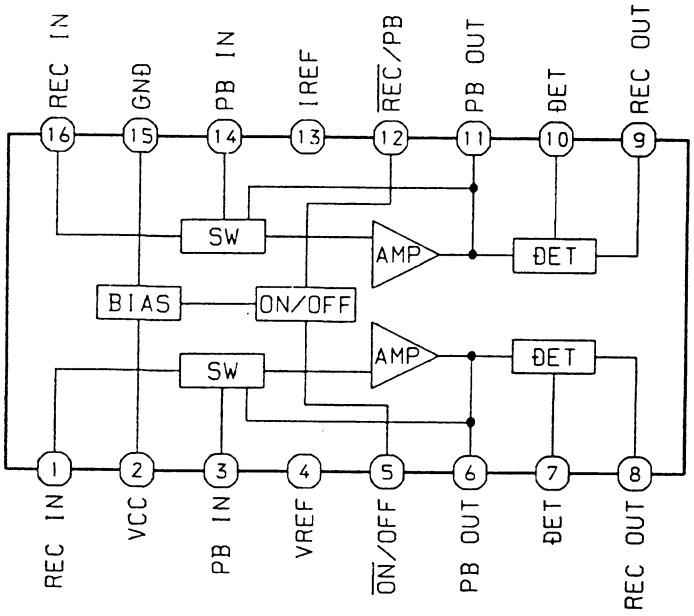

IC, BU4094B

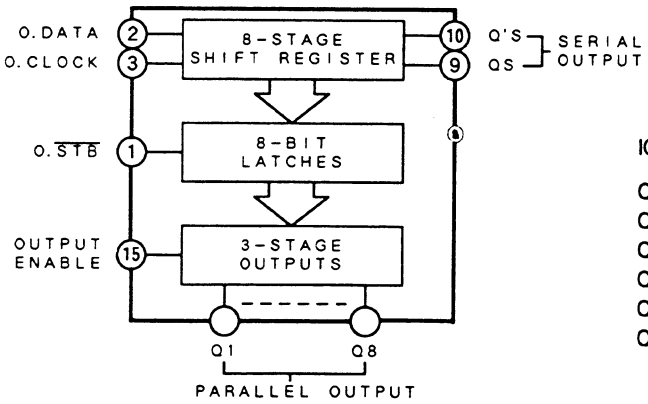

IC901

Q1 : O.LED DOLBY B
Q2~Q4 : NC
Q5 : O.LED ▷1
Q6 : O.LED ◁1
Q7 : O.LED ▷2
Q8 : O.LED ◁2

IC902

Q1 : O.LED REC
Q2 : O.LED CD
Q3 : O.LED DECK
Q4 : NC
Q5 : O.LED
Q6 : O.LED
Q7 : O.LED
Q8 : O.LED PAUSE

TRUTH TABLE

CLOCK	OUTPUT ENABLE	STROBE	DATA	PARALLEL OUTPUTS		SERIAL OUTPUTS	
				Q1	Qn	QS	Q'S
↑	L	×	×	Z	Z	Q7	NO CHG.
↓	L	×	×	Z	Z	NO CHG.	QS
↑	H	L	×	NO CHG.	NO CHG.	Q7	NO CHG.
↑	H	H	L	L	Qn − 1	Q7	NO CHG.
↑	H	H	H	H	Qn − 1	Q7	NO CHG.
↓	H	×	×	NO CHG.	NO CHG.	NO CHG.	QS

Z = HIGH IMPEDANCE × = DON'T CARE

BLOCK DIAGRAM (FX – WZ5000)

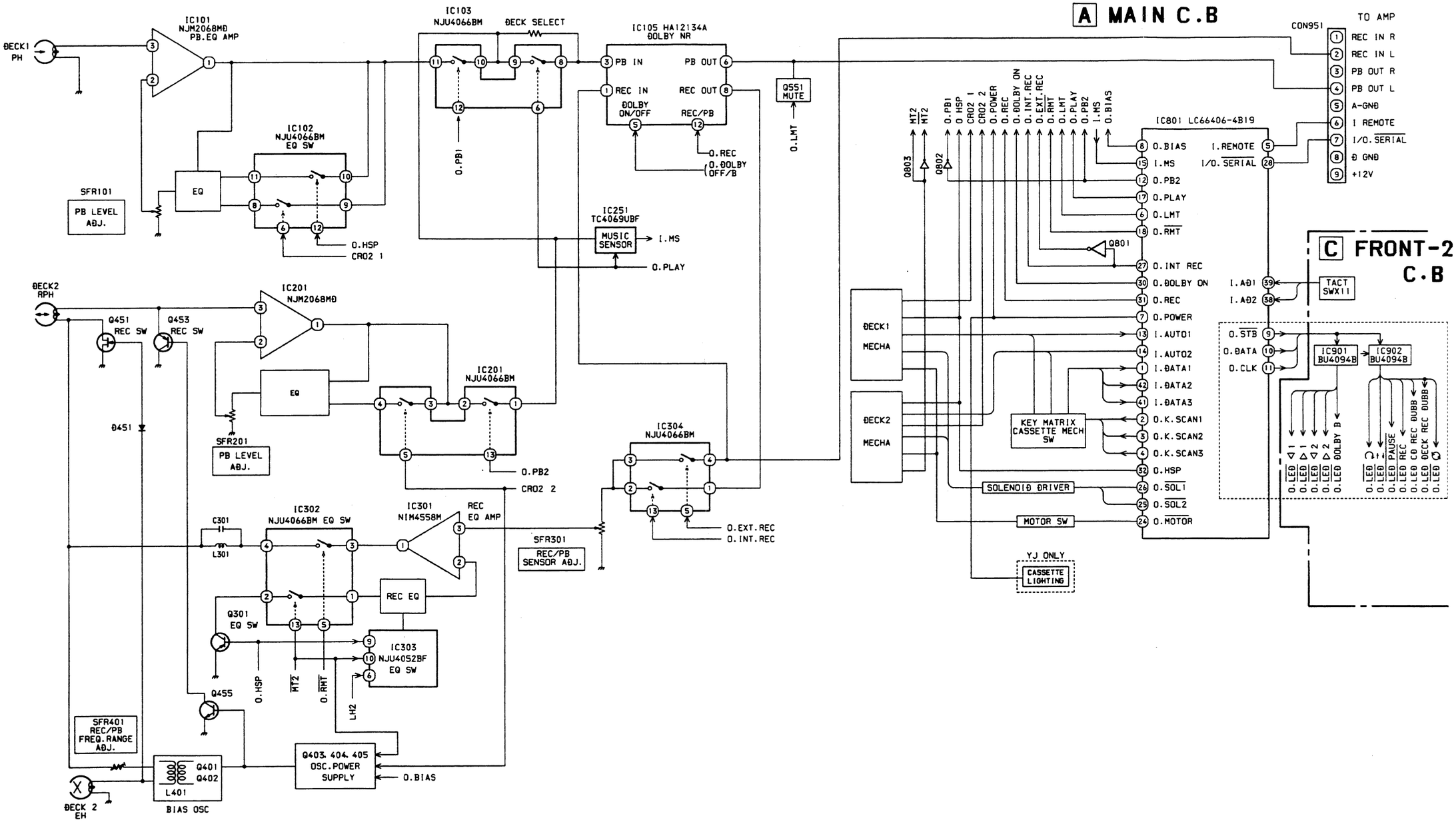

SCHEMATIC DIAGRAM (FX – WZ5000)

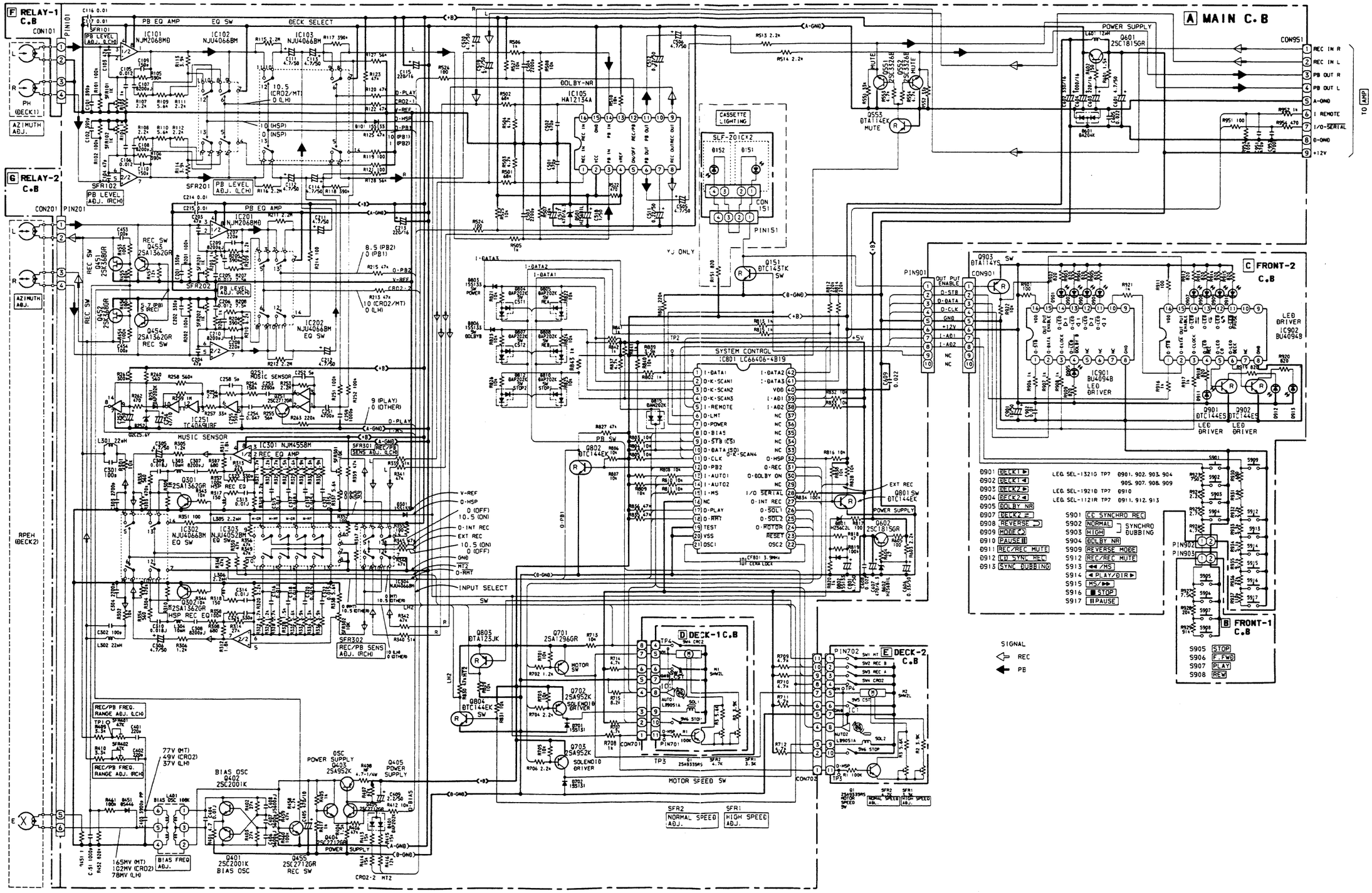

WIRING – 1 (FX – WZ5000)

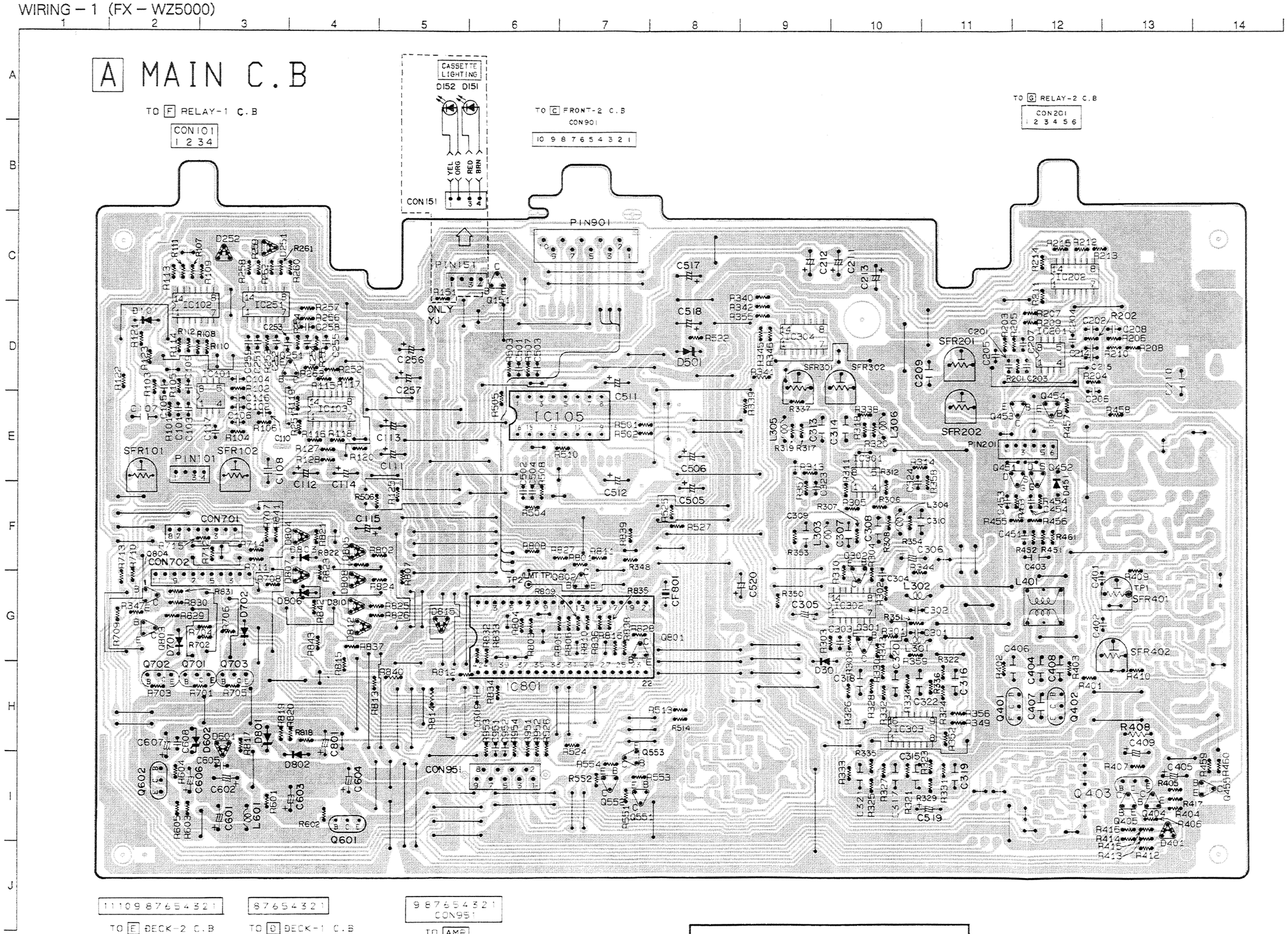

GRAPHIC SYMBOLS PRINTED CIRCUIT BOARD OF ELECT. CAP. ARE DESIGNED AS NEGATIVE POLE.

（プリント基板内のケミコンの極性表示はθ表示です。）

GRAPHIC SYMBOLS PRINTED CIRCUIT BOARD OF ELECT. CAP. ARE DESIGNED AS NEGATIVE POLE.

(プリント基板内のケミコンの極性表示は⊖表示です。)

D DECK-1 C.B

E DECK-2 C.B

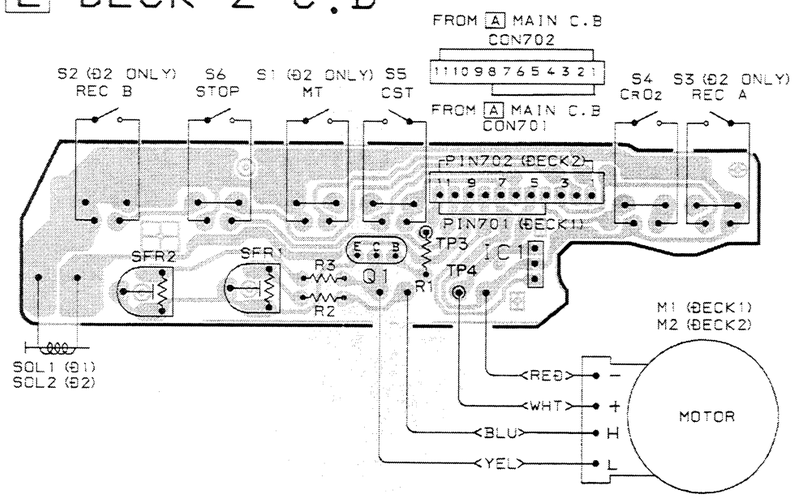

B FRONT-1 C.B

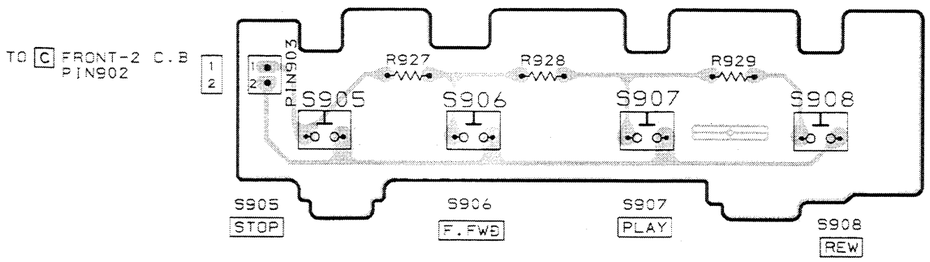

G RELAY-2 C.B

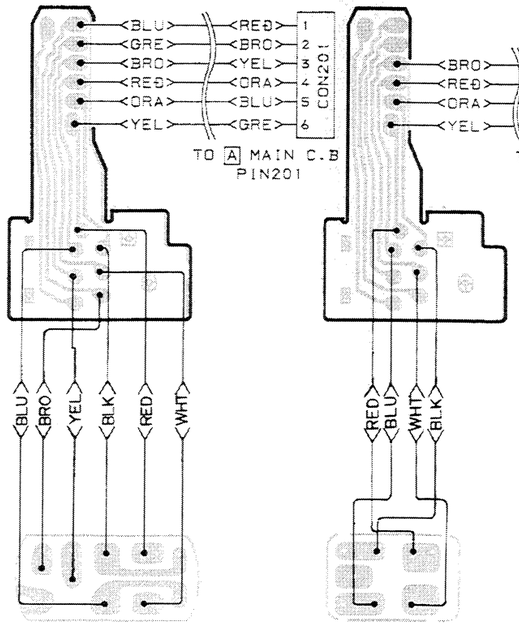

RPEH

PH

F RELAY-1 C.B

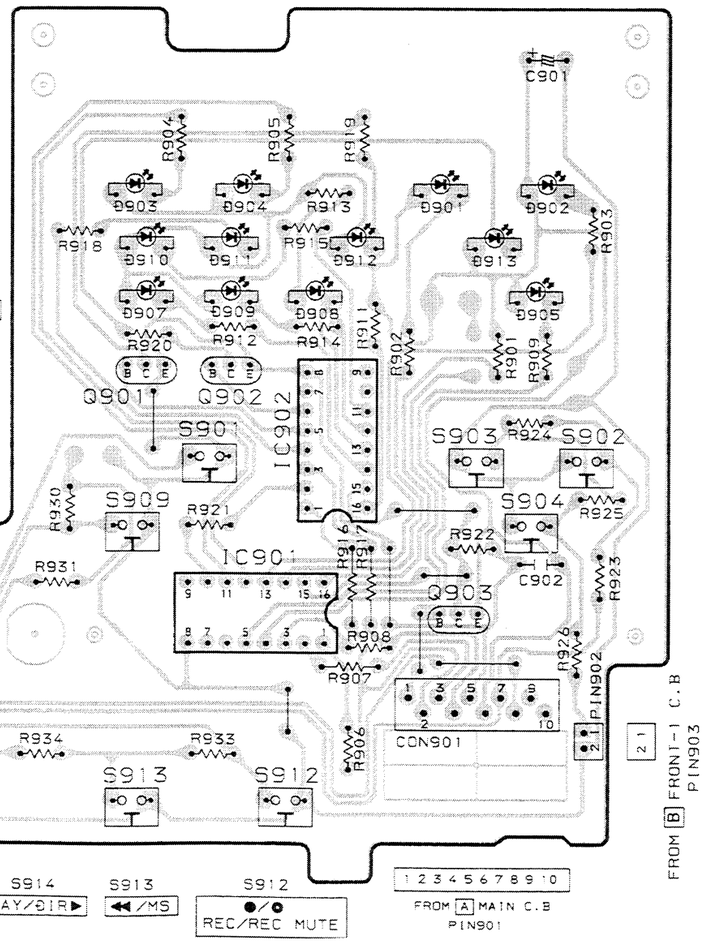

C FRONT-2 C.B

ADJUSTMENT (FX—WZ5000)

A MAIN C.B

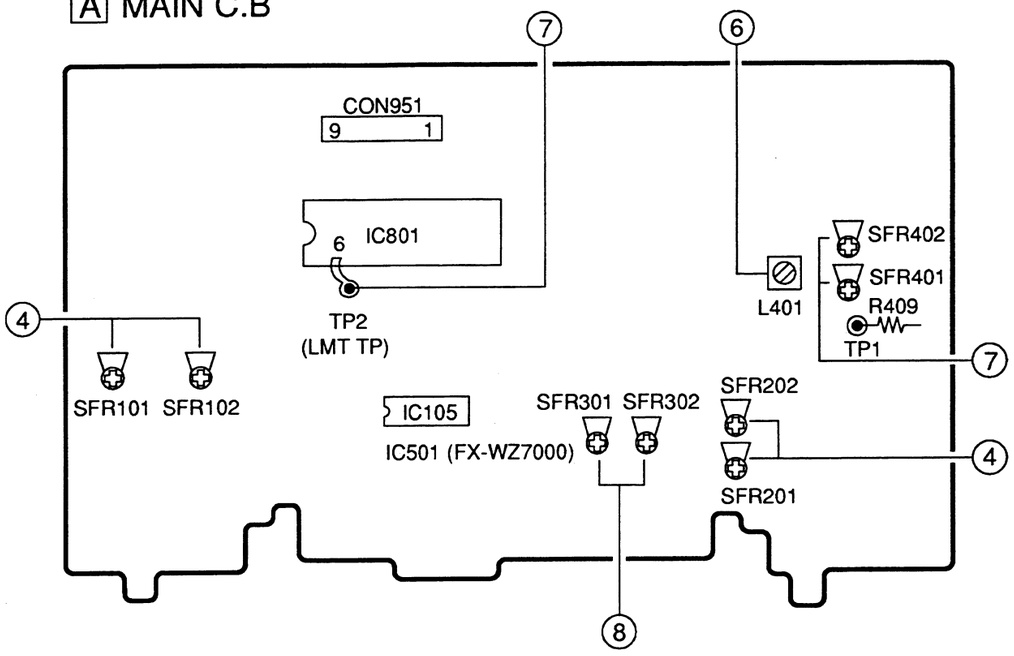

(TOP VIEW)

D DECK—1 C.B
E DECK—2 C.B

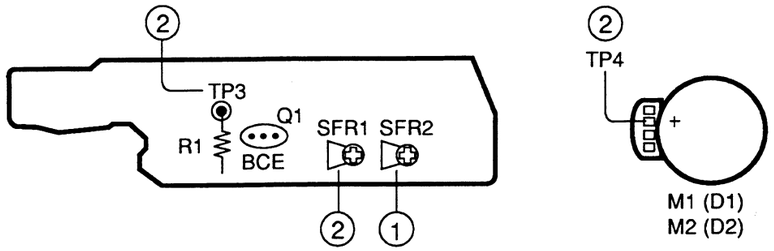

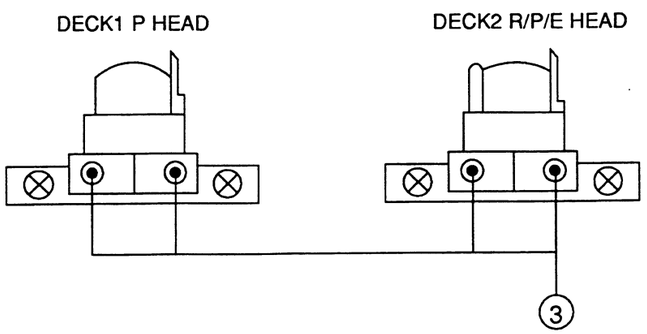

1. Normal Speed Adjustment (DECK1, DECK2)
   Settings: · Test tape: TTA-100 (TTA-111S)
   · Test Point: PB-OUT (CON951)
   · Adjustment Location: SFR2 (DECK1)
   SFR2 (DECK2)
   Method: Play back the test tape, adjust for 3000 ± 7Hz.

2. High Speed Adjustment (DECK1, DECK2)
   Settings: · Test tape: TTA-100 (TTA-111S)
   · Test Point: PB-OUT (CON951)
   · Adjustment Location: SFR1 (DECK1)
   SFR1 (DECK2)
   Method: After normal speed adjustment, play back the test tape, and make the high speed condition to be shorted between TP3 and TP4. Adjust for 6000 ±10Hz.

3. Head Azimuth Adjustment (DECK1, DECK2)
   Settings: · Test tape: TTA-310 (TTA-317E, SCC-1429)
   · Test Point: PB-OUT (CON951)
   · Adjustment Location: Head azimuth adjustment screw
   Method: Play back the 10kHz signal of the test tape and adjust so that the output becomes maximum in each FWD PLAY and REV PLAY mode.

4. PB Level Adjustment (DECK1, DECK2)
   Settings: · Test tape: TTA-200 (TTA-161, TCC-130)
   · Test Point: PB-OUT (CON951)
   · Adjustment Location: SFR101 (DECK1, Lch)
   SFR102 (DECK1, Rch)
   SFR201 (DECK2, Lch)
   SFR202 (DECK2, Rch)
   Method: Play back the test tape and adjust so that the output becomes 280mV ± 15mV.

5. FWD/REV Playback Output Difference Check (DECK1, DECK2)
   Settings: · Test tape: TTA-200 (TTA-161, TCC-130)
   · Test Point: PB-OUT (CON951)
   Method: Play back the test tape and make sure that the output difference between the FWD and REV modes is 0dB±0.7dB.

6. Bias Frequency Adjustment (DECK2)
   Settings: · Test tape: TTA-601 (TTA-600, TTA-119K)
   · Test Point: TP1
   · Adjustment Location: L401
   Method: Set DECK2 to the record mode and adjust L401 so that the frequency at TP1 is 107.5 kHz±1.5kHz.

7. REC/PB Frequency Response Adjustment (DECK2)
   Settings: · Test tape: TTA-601 (TTA-600, TTA-119K)
   · Test Point: PB-OUT (CON951)
   · Adjustment Location: SFR401 (Lch)
   SFR402 (Rch)
   Method: Connect TP2 (LMT TP) to ground (chassis), apply a 1kHz signal and adjust attenuator so that the level at the PB OUT is 25mV.
   Record and play back the 1kHz and 10kHz signals and adjust so that the output level of 10kHz signal is 0dB±0.3dB for 1kHz signal.
   After adjustment, remove the grounding lead wire.

8. REC/PB Sensitivity Adjustment (DECK2)
   Settings: · Test tape: TTA-601 (TTA-600, TTA-119K)
   · Test Point: PB-OUT (CON951)
   · Adjustment Location: SFR301(Lch)
   SFR302 (Rch)
   Method: Connect TP2 (LMT TP) to ground (chassis), apply a 1kHz signal and adjust attenuator so that the level at the PB OUT is 25mV.
   Record and play back the 1kHz signal and adjust so that the output level of is 25mV± 0.3dB. After adjustment, remove the grounding lead wire.

PRACTICAL SERVICE FIGURE (FX—WZ5000)

PB output level:	280mV±34mV TTA-200 (TTA-161, TCC-130)
REC/PB output level:	250mV±1dB (PB-OUT, 1kHz)
Distortion (REC/PB):	Less than 2.0% (NORM., CrO2)
Erasing ratio:	More than 60dB
Crosstalk:	More than 60dB
Channel separation:	More than 35dB
Noise (REC/PB):	Less than 2.0mV (DOLBY OFF NORM.) Less than 1.0mV. (DOLBY B ON CrO2, MT) Less than 0.8mV (DOLBY C ON CrO2, MT)
Noise (PB):	Less than 1.8mV (DOLBY OFF NORM.) Less than 0.9mV (DOLBY B ON CrO2) Less than 0.8mV (DOLBY C ON CrO2)
Recording bias frequency:	108kHz
Tape speed:	3000Hz±1.5%
Wow & flutter (RMS):	Less than 0.35% (DECK1, 2)
Take-up torque:	30~55g-cm (DECK1, 2)
F.F & REW torque:	75~160g-cm (DECK1, 2)
Back tension:	2~6g-cm (DECK1, 2)
Test tape:	NORMAL: TTA-601 (TTA-600, TTA-119K)
	CrO_2: TTA-610 (TTA-119H)

IC DESCRIPTION (FX—WZ5000)

IC, LC66406-4B19

Pin No.	Pin Name	I/O	Description			
			KEY DATA input			
			When K · SCAN1 is "H"	When K · SCAN2 is "H"	When K · SCAN3 is "H"	When K · SCAN4 is "H"
1	I · DATA1	I	DECK2 REC A SW input	DECK2 REC B SW input	DECK1 STOP SW input	SW CD HIGH SPEED (ON/OFF)
42	I · DATA2	I	DECK1 CST SW input	DECK2 CST SW input	DECK2 STOP SW input	SW CAL (Calibration) ON/OFF
41	I · DATA3	I	SW · POWER input	SW · DOLBY C (ON/OFF)	DECK1/2 SW input	
2	O · K · SCAN1	O	SCAN output terminal of DATA 1~3.			
3	O · K · SCAN2	O				
4	O · K · SCAN3	O				
5	I · REMOTE	I	Serial data input terminal of remote controller.			
6	O · LMT	O	Output terminal for record/playback monitor output signal muting. "H" at muting.			
7	O · POWER	O	POWER ON/OFF control. "H" at ON.			
8	O · BIAS	O	Bias oscillation output terminal for DECK 2. "H" at recording/dubbing. "L" at resetting.			
9	O · $\overline{STB}$ ($\overline{CS}$)	O	Strobe signal for the shift register (IC, BU4094).			
10	O · DATA (SO) / K · SCAN4	O	Serial data for the shift register (IC, BU4094).			
11	O · CLK	O	Serial data clock signal for the shift register (IC, BU4094).			
12	O · PB2	O	Playback output control terminal for DECKS 1 and 2. "H" at playback with DECK 2.			
13	I · AUTO1	I	Reel pulse input terminal for DECK 1.			
14	I · AUTO2	I	Reel pulse input terminal for DECK 2.			
15	I · MS	I	MS signal input terminal. Active "H".			
16	NC	—	Not used. (Connected to +5V)			
17	O · PLAY	O	Cue/review mute output and MS sensitivity switching output terminal. "H" at playback.			
18	O · $\overline{RMT}$	O	Muting output terminal for recording input. "H" at record mute, record start, record clear and record pause.			
19	TEST	—	MPU test terminal. Connected to D-GND.			
20	VSS	—	Connected to D-GND.			
21	OSC1	—	3.9MHz Oscillation terminal			
22	OSC2	—				
23	$\overline{RESET}$	I	Reset input terminal. Active "L".			
24	O · $\overline{MOTOR}$	O	Main motor control output terminal for DECK 1 and 2. "H" with both decks at STOP.			
25	O · $\overline{SOL2}$	O	Solenoid drive output terminal for DECK 2. Active "L".			
26	O · $\overline{SOL1}$	O	Solenoid drive output terminal for DECK 1. Active "L".			
27	O · INT REC	O	Recording input source switching output terminal for deck 2. "H": Deck 1 at STOP, FF or REW (with DECK NOR, DECK HI, CD NOR, DECK2 REC). "L": In other modes: Deck 2 at REC, etc. (with CD HI, DECK2 PLAY/STOP, DECK1 PLAY).			
28	I/O · $\overline{SERIAL}$	I/O	Input/output terminal for serial data with CD, AMPLIFIER and TUNER.			

Pin No.	Pin Name	I/O	Description
29	NC	—	Not used.
30	O · DOLBY ON	O	DOLBY NR ON/OFF switching output terminal. "H" at DOLBY NR ON.
31	O · REC	O	Dolby encoder/decoder switching output terminal. "H" at recording and "L" at dubbing.
32	O · HSP	O	High-speed control output terminal for DECKS 1 and 2. "H" at HIGH-SPEED DUBBING.
33	NC	—	Not used.
34			
35			
36			
37			
38	I · AD2	I	Key function control input terminal.
39	I · AD1	I	
40	VDD	—	Power terminal (+5V).

EXPLODED VIEW – 1 (FX – WZ5000)

REF.	PART NO.	DESCRIPTION
A	87-743-094-419	UT2+3-6 W/O SLOT BLK
B	87-067-660-019	BVT2+3-8 W/O SLOT BLK
C	87-067-758-019	BVT2+3-12 W/O SLOT
D	87-067-776-019	BVT2+3-12W CONVEX
E	87-067-584-019	BVT2+3-6
F	87-721-095-419	QT2+3-8 GLD W/O SLOT
G	87-067-703-019	BVT2+3-10 W/O SLOT
H	87-067-688-019	BVTT+3-6
I	87-081-808-019	PW, 1.7-3.5-0.25
J	87-067-178-019	VTT+2.6-3

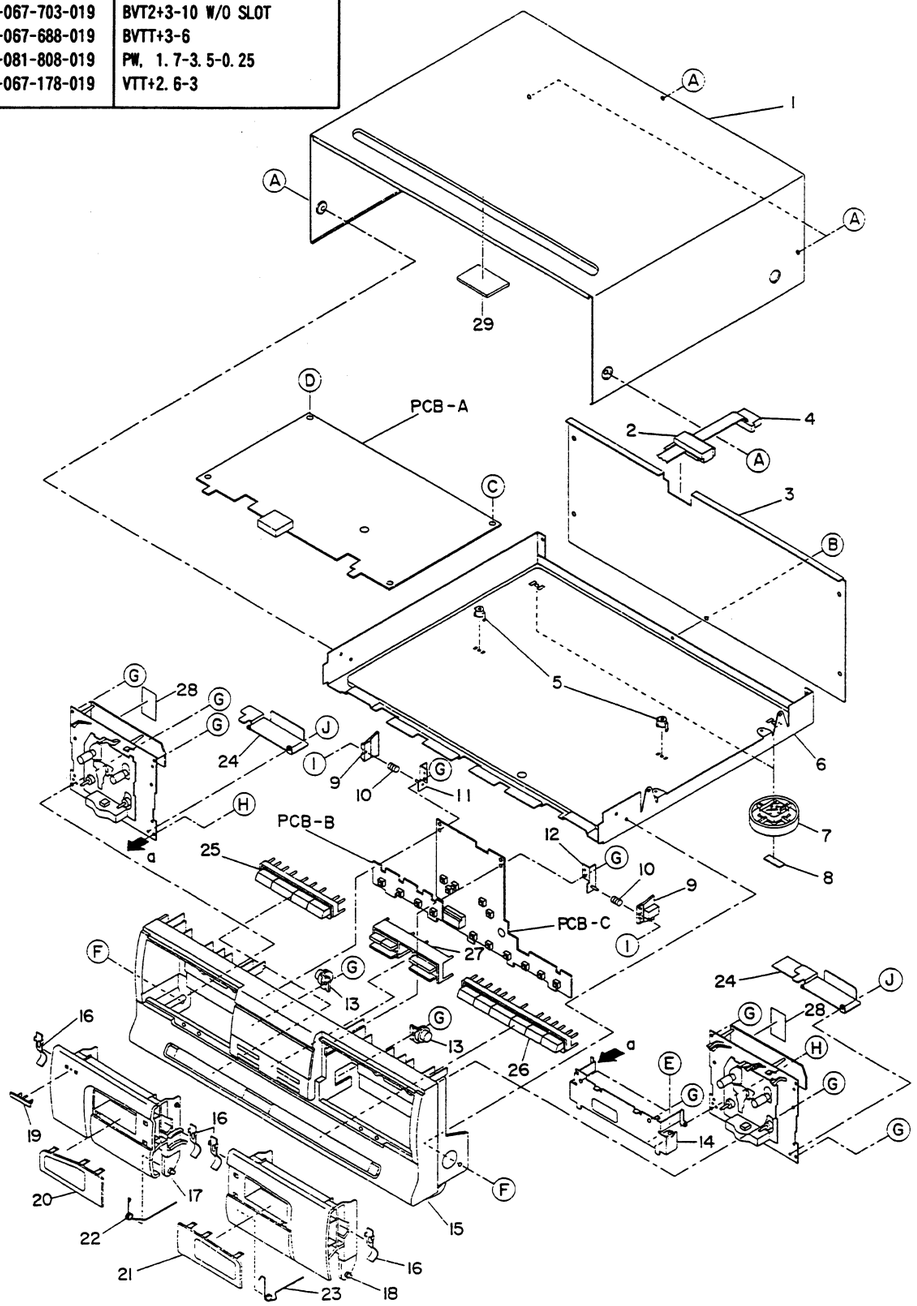

MECHANICAL PARTS LIST (FX – WZ5000)

DESCRIPTIONで判断できない物は "REFERENCE NAME LIST" を参照してください。
If can't understand for Description please kindly refer to "REFERENCE NAME LIST".

PART NO. CHANGED TO	REF. NO.	PART NO.	DESCRIPTION	COMMON MODEL	Q.TY
	1-1	★81-VW1-028-018	CAB, STEEL G (YNE)		1
	1-1	★81-VW1-017-119	CAB, STEEL (YJ)		1
	1-2	★89-VT5-202-010	BUSHING, CORD		1
	1-3	★82-VW2-018-119	PANEL, REAR YBNE (YNE)	※	1
	1-3	★82-VW2-017-119	PANEL, REAR YJBN (YJ)	※	1
	1-4	★82-VW2-623-019	CORD, FG 9P 750	※	1
	1-5	---	HLDR, PCB 6.0		2
	1-6	---	CHASSIS, AMP		1
	1-7	★81-VX1-012-019	FOOT, REAR		2
	1-8	★82-VW2-211-019	FELT 20 – 7.5 – 2	※	2
	1-9	★80-CD3-233-010	PLATE, LOCK		2
	1-10	★81-715-234-019	SPR – C, LOCK PLATE 5V		2
	1-11	★82-VW2-201-019	HLDR ASSY, LOCK 1	※	1
	1-12	★82-VW2-202-010	HLDR ASSY, LOCK 2	※	1
	1-13	★87-063-143-010	OIL – DMPR 75		2
	1-14	★82-VW2-207-019	HLDR, BOX	※	1
	1-15	★09-047-737-010	CAB, FR ASSY	※	1
	1-16	★81-MX4-223-019	SPR – P, CASS		4
	1-17	★82-VW2-015-219	BOX, CASS 1 EX	※	1
	1-18	★82-VW2-020-219	BOX, CASS 2 EX	※	1
	1-19	★81-DS1-011-019	BADGE, AIWA N		1
	1-20	★82-VW2-010-019	WINDOW, CASS 1	※	1
	1-21	★82-VW2-011-019	WINDOW, CASS 2	※	1
	1-22	★82-VW2-208-019	SPR – T, EJECT 1	※	1
	1-23	★82-VW2-209-019	SPR – T, EJECT 2	※	1
	1-24	★82-VW2-618-119	PLATE, SHLD MECHA	※	2
	1-25	★82-VW2-005-019	KEY, PLAY	※	1
	1-26	★82-VW2-006-019	KEY, REC	※	1
	1-27	★82-VW2-007-019	KEY, DUBB	※	1
	1-28	★80-MK2-206-010	DMPR, 27 – 44.5 – 5.3		2
	1-29	★82-226-274-010	DMPR, 80 – 60 – 3 (YNE)		1

EXPLODED VIEW — 2 (FX-WZ5000)

REF.NO.	PART NO.	DESCRIPTION
A	87-571-035-410	VIT+2-6
B	80-ZM6-207-010	V+1.6-7

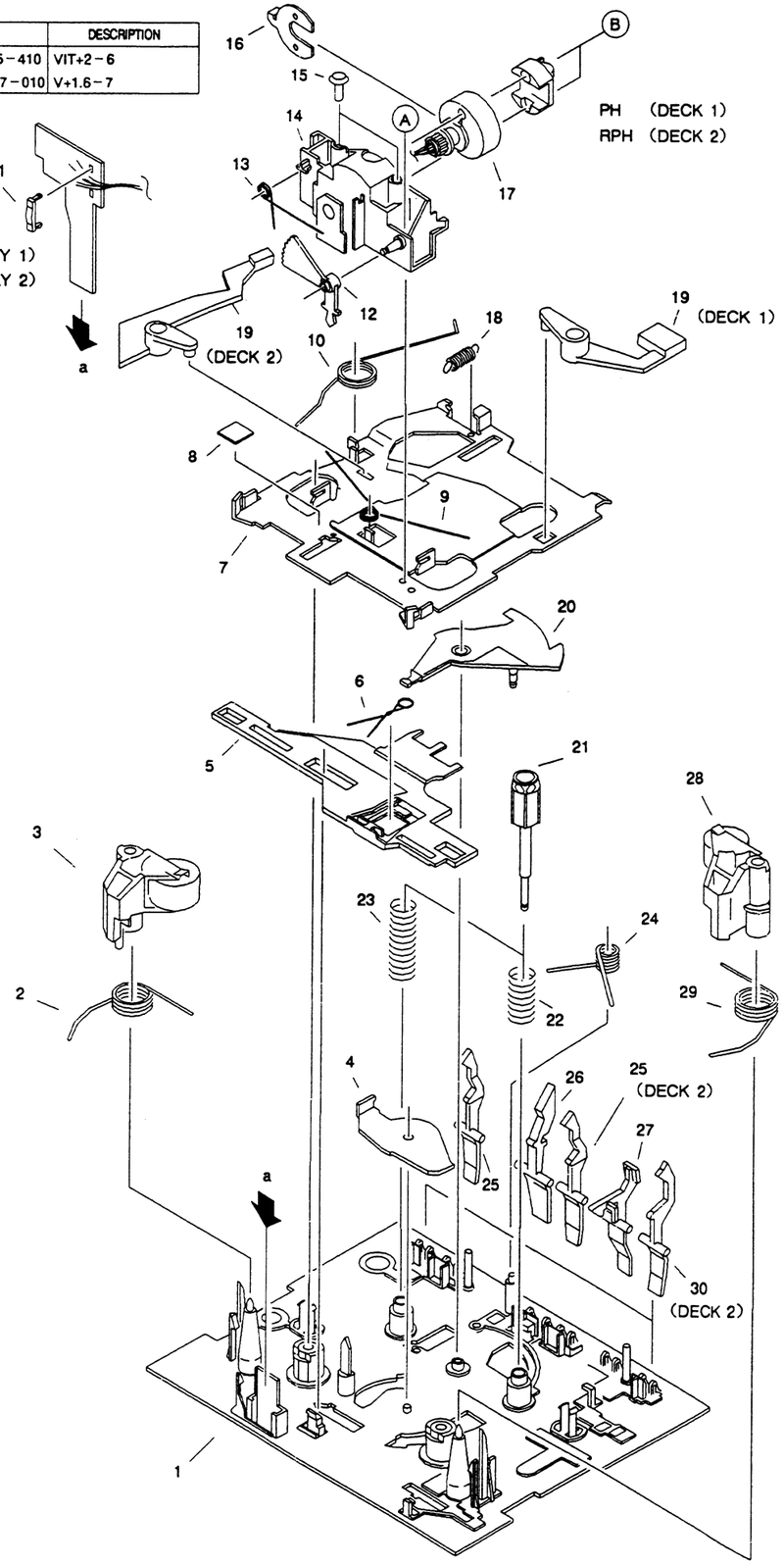

PART NO. CHANGED TO	REF. NO.	PART NO.	DESCRIPTION	COMMON MODEL	Q.TY
	2-1	★82-ZM1-201-010	CHAS ASSY, MECH	※	1
	2-2	★82-ZM1-258-010	SPR-T, PINCH L	※	1
	2-3	★82-ZM1-248-110	LVR ASSY, PINCH L	※	1
	2-4	★82-ZM1-295-010	PLATE ASSY, LINK	※	1
	2-5	★82-ZM1-266-010	LVR, DIR	※	1
	2-6	★82-ZM1-214-010	SPR-T, DIR	※	1
	2-7	★82-ZM1-206-010	CHAS, HEAD	※	1
	2-8	★87-078-014-010	SH, 5-5-0.05		1
	2-9	★82-ZM1-269-010	SPR-T, BRG	※	1
	2-10	★82-ZM1-219-010	SPR-T, LINK	※	1
	2-11	---	HLDR WIRE 2		1
	2-12	★82-ZM1-210-010	GEAR, H T	※	1
	2-13	★82-ZM1-213-010	SPR-T, HEAD	※	1
	2-14	★82-ZM1-207-010	GUIDE, TAPE	※	1
	2-15	★82-ZM1-283-010	S-SCREW, AZIMUTH	※	2
	2-16	★82-ZM1-209-010	PLATE, HEAD	※	1
	2-17	★82-ZM1-208-010	HLDR, HEAD	※	1
	2-18	★82-ZM1-218-010	SPR-E, HB	※	1
	2-19	★82-ZM1-264-010	LVR, EJECT R (DECK 1)	※	1
	2-19	★82-ZM1-263-010	LVR, EJECT L (DECK 2)	※	1
	2-20	★82-ZM1-222-010	LVR, PLAY	※	1
	2-21	★82-ZM1-217-010	REEL TABLE	※	2
	2-22	★82-ZM1-244-010	SPR-C, BT	※	1
	2-23	★82-ZM1-285-010	SPR-C, BT L	※	1
	2-24	★82-ZM1-257-010	SPR-T, CAS	※	1
	2-25	★82-ZM1-241-010	LVR, MC (DECK 1)	※	1
			(DECK 2)	※	2
	2-26	★82-ZM1-242-010	LVR, CAS	※	1
	2-27	★82-ZM1-243-010	LVR, STOP	※	1
	2-28	★82-ZM1-253-110	LVR ASSY, PINCH R	※	1
	2-29	★82-ZM1-259-010	SPR-T, PINCH R	※	1
	2-30	★82-ZM1-240-010	LVR, REC (DECK 2)	※	2

EXPLODED VIEW — 3 (FX-WZ5000)

REF.NO.	PART NO.	DESCRIPTION
A	87-251-070-410	U+2.6-3
B	87-741-073-410	UT2+2.6-6
C	87-067-932-010	PW, 2.15-6.8-0.5

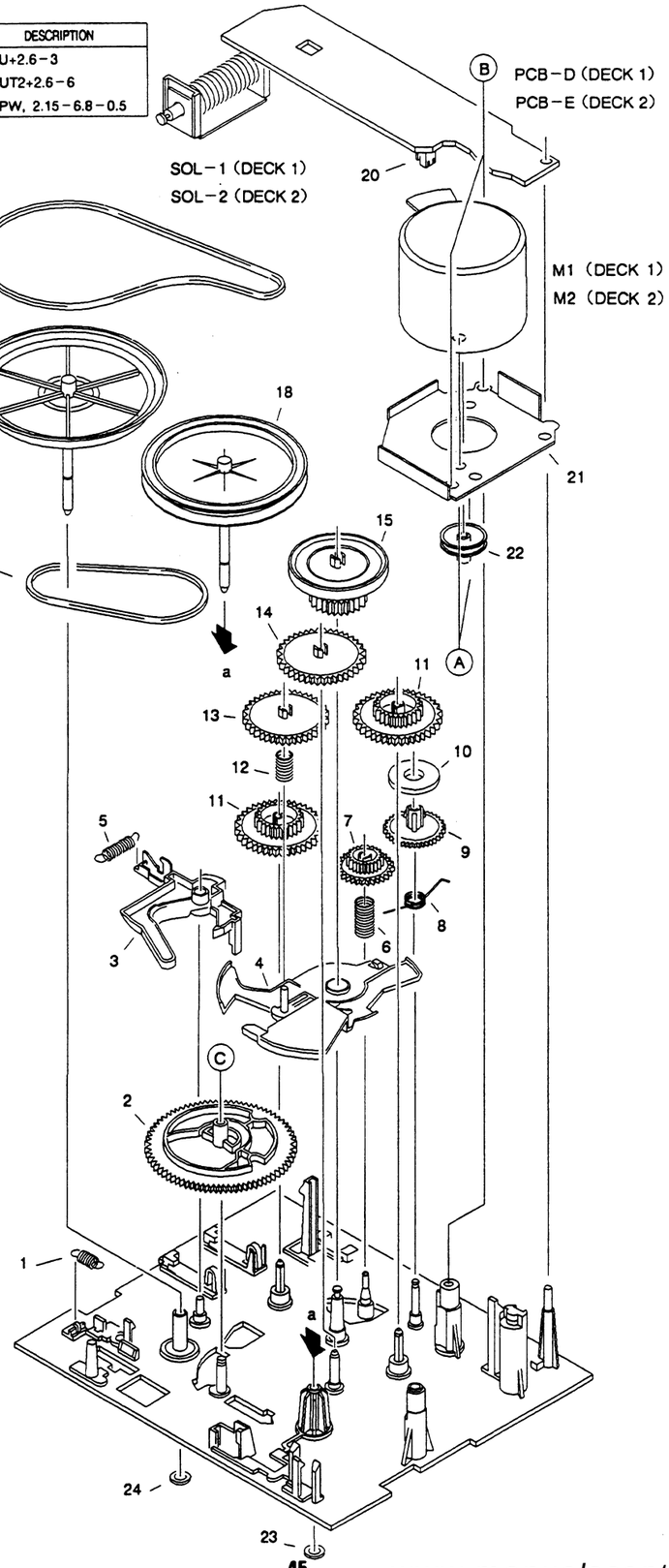

PART NO. CHANGED TO	REF. NO.	PART NO.	DESCRIPTION	COMMON MODEL	Q.TY
	3-1	★82-ZM1-255-010	SPR-E, LVR DIR	※	1
	3-2	★82-ZM1-221-010	GEAR, CAM	※	1
	3-3	★82-ZM1-227-010	LVR, TRIG	※	1
	3-4	★82-ZM1-224-010	LVR, FR	※	1
	3-5	★82-ZM1-265-010	SPR-E, TRIG	※	1
	3-6	★82-ZM1-277-010	SPR-C, PLAY	※	1
	3-7	★82-ZM1-223-010	GEAR, PLAY	※	1
	3-8	★82-ZM1-256-010	SPR-T, FR	※	1
	3-9	★82-ZM1-220-010	GEAR, IDLER	※	1
	3-10	★80-ZM6-217-010	RING MAGNET 2		1
	3-11	★82-ZM1-216-010	GEAR, REEL	※	2
	3-12	★82-ZM1-276-010	SPR-C, FR	※	1
	3-13	★82-ZM1-225-010	GEAR, FR	※	1
	3-14	★82-ZM1-226-010	GEAR, REW	※	1
	3-15	★82-ZM1-228-010	SLIP DISK ASSY	※	1
	3-16	★82-ZM1-261-010	BELT, FR	※	1
	3-17	82-ZM1-237-010	FLY-WHL ASSY, R	※	1
	3-18	82-ZM1-234-010	FLY-WHL ASSY, L	※	1
	3-19	★82-ZM1-260-010	BELT, MAIN	※	1
	3-20	★82-ZM1-245-010	HLDR, IC	※	1
	3-21	★82-ZM1-246-010	HLDR, MOTOR	※	1
	3-22	★82-ZM1-247-010	PULLEY, MOTOR	※	1
	3-23	★82-ZM1-288-010	SH, 1.63-3.2-0.5 SLT	※	1
	3-24	★80-ZM6-243-010	SH, 1.75-3.6-0.5 SLT		1

SPRING APPLICATION POSITION (FX-WZ5000)

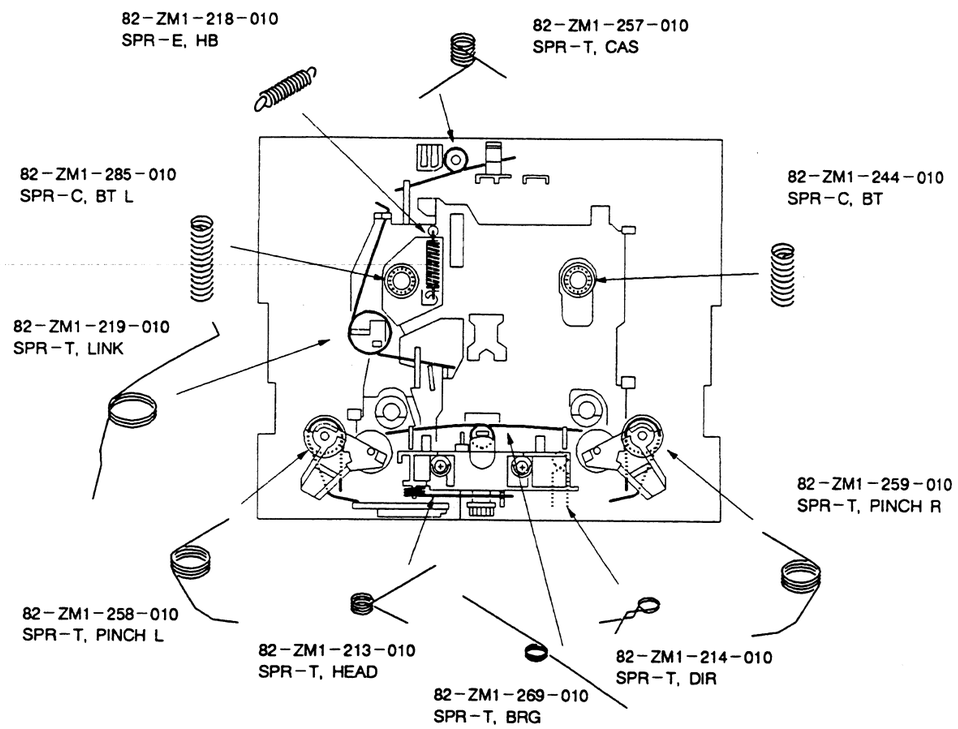

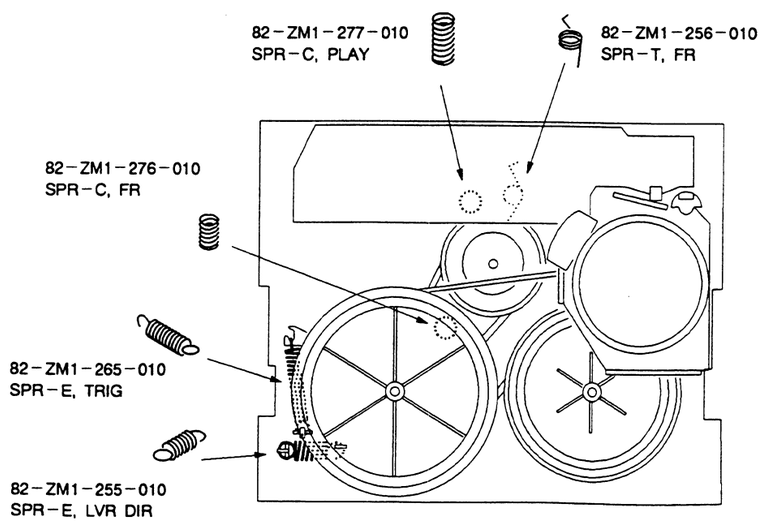

MODEL NO.

TX – Z7000

CAUTIONS WHEN SERVICING (TX – Z7000)

Model TX – Z7000 does no have a power supply circuit. Power is supplied to it through a 11 – pin flat cable and the signal inputs/outputs are also perfomed through this cable.
When servicing the TX – Z7000 connect it to the MX – Z3000M so that power is supplied to the TX – Z7000.
If the MX – Z3000M is not available, follow the procedure below.

[When servicing the unassembled TX – Z7000]

①Supply the following voltages to each terminal from an external power supply.

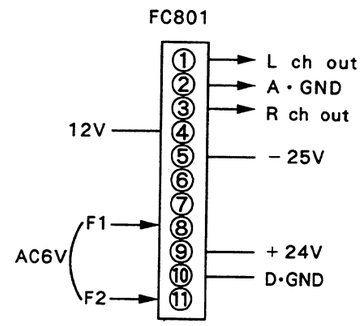

② Connection diagram when using multi power supply (LPS – 9088).

- Turn the TX – Z7000 on using the SLEEP function since the POWER SW is not supplied.
- Connect the multi – conversion harness for the X5 type (modeified harness for F550) to J1.

Connection diagram of multi – conversion harness

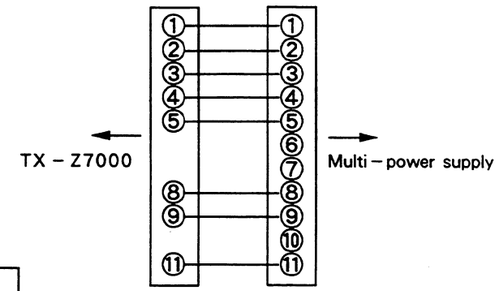

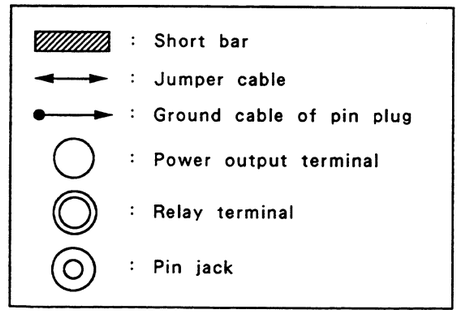

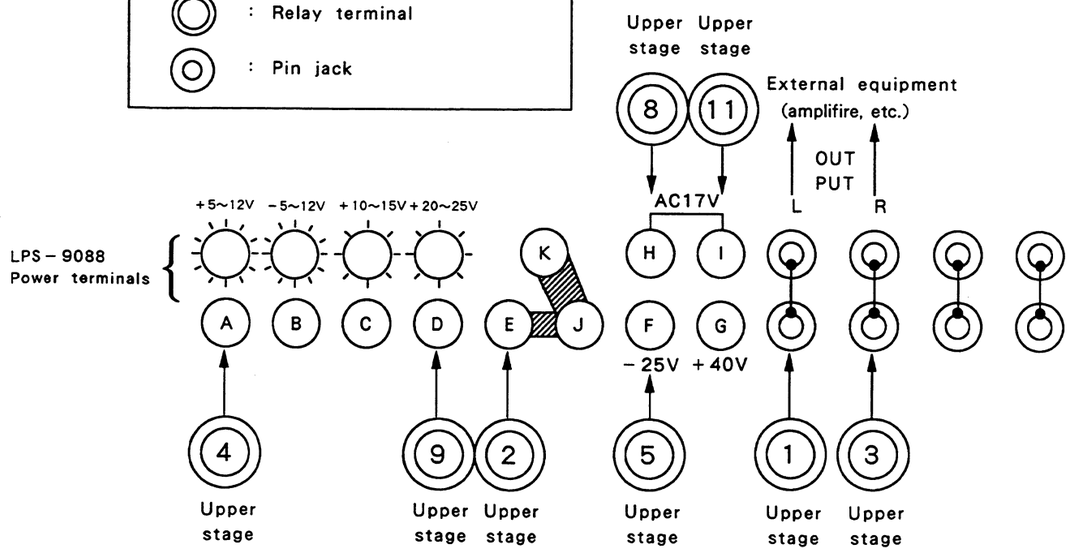

ELECTRICAL MAIN PARTS LIST (TX－Z7000)

DESCRIPTIONで判断できない物は "REFERENCE NAME LIST" を参照してください。
If can't understand for Description please kindly refer to "REFERENCE NAME LIST".

REF. NO	PART NO.	カンリ NO.	DESCRIPTION
IC			
	87-001-376-010		IC, LC7218
	87-001-942-010		IC, LA1265S(G)
	87-020-446-010		IC, TA7343AP
	81-VT1-610-010		IC, UPD75268CW-029
TRANSISTOR			
	89-502-094-080		C-FET, 2SK209Y
	89-502-115-080		C-FET, 2SK211GR(YE, YZ)
	89-503-025-080		C-FET, 2SK302GR
	89-327-143-080		C-TR, 2SC2714(O)
	89-316-235-080		C-TR, 2SC1623J5
	89-327-125-080		C-TR, 2SC2712GR
	89-333-266-080		C-TR, 2SC3326B
	87-026-230-080		C-TR, DTA114YK
	89-110-485-080		TR, 2SA1048GR
	89-318-155-080		TR, 2SC1815GR
	89-320-011-080		TR, 2SC2001K
	89-324-585-080		TR, 2SC2458GR
	87-026-214-080		TR, DTA114YS
DIODE			
	87-020-125-080		C-DIODE, 1SS181
	87-020-027-080		C-DIODE, 1SS184
	87-026-360-080		C-VARICAP, KV1430(YLH, YH, YZ)
	87-026-360-010		C-VARICAP, KV1430(YE)
	87-020-583-080		C-ZENER, 02CZ5.1Y
	87-020-585-080		C-ZENER, 02CZ6.2Y
	87-020-110-080		DIODE, 1SS177
	81-754-634-090		VARI-CAP, KV1260(YE, YZ)
	87-027-449-080		ZENER, HZ15-3L
	87-017-172-080		ZENER, HZS11A1L
MAIN C.B			
	81-MT3-655-010		AM PACK 1, S(YLH, YH)
	81-689-212-010		PLATE, EARTH
C1	87-010-312-080		C-CAP, S 15P-50 CH
C2	87-015-819-080		C-CAP, 0.01
C3	87-010-197-080		C-CAP, S 0.01-25 B
C4	87-010-197-080		C-CAP, S 0.01-25 B
C5	87-010-197-080		C-CAP, S 0.01-25 B
C6	87-010-197-080		C-CAP, S 0.01-25 B
C7	87-010-147-080		C-CAP, S 3P-50 CH(YZ)
C7	87-010-150-080		C-CAP, S 6P-50 CH(YLH, YH, YE)
C8	87-018-102-080		CAP, TC-U 6.8P-50 SL(YLH, YH, YE)
C9	87-010-158-080		C-CAP, S 22P-50 SL
C10	87-010-154-080		C-CAP, S 10P-50 CH
C11	87-010-312-080		C-CAP, S 15P-50 CH
C12	87-010-312-080		C-CAP, S 15P-50 CH
C13	87-010-197-080		C-CAP, S 0.01-25 B
C14	87-010-146-080		C-CAP, S 2P-50 CH
C15	87-010-145-080		C-CAP, S 1P-50 CH(YLH, YH, YE)
C15	87-010-148-080		C-CAP, S 4P-50 CH(YZ)
C16	87-010-154-080		C-CAP, S 10P-50 CH(YLH, YH, YE)
C16	87-010-149-080		C-CAP, S 5P-50 CH(YZ)
C17	87-010-197-080		C-CAP, S 0.01-25 B
C18	87-010-170-080		C-CAP, S 220P-50 SL
C19	87-010-197-080		C-CAP, S 0.01-25 B
C20	87-010-197-080		C-CAP, S 0.01-25 B
C21	87-010-197-080		C-CAP, S 0.01-25 B
C22	87-010-400-080		CAP, E 0.47-50 SME
C23	87-010-197-080		C-CAP, S 0.01-25 B
C24	87-010-149-080		C-CAP, S 5P-50 CH
C25	87-010-197-080		C-CAP, S 0.01-25 B(YLH, YH, YE)
C26	87-010-312-080		C-CAP, S 15P-50 CH
C27	87-010-197-080		C-CAP, S 0.01-25 B
C30	87-010-401-080		CAP, E 1-50 SME
C31	87-010-197-080		C-CAP, S 0.01-25 B
C32	87-010-197-080		C-CAP, S 0.01-25 B
C33	87-010-405-080		CAP, E 10-50 SME
C34	87-010-166-080		C-CAP, S 100P-50 SL
C35	87-010-197-080		C-CAP, S 0.01-25 B
C36	87-010-401-080		CAP, E 1-50 SME
C37	87-010-404-080		CAP, E 4.7-50 SME
C38	87-010-405-080		CAP, E 10-50 SME
C39	87-010-544-080		CAP, E 0.1-50
C40	87-010-403-080		CAP, E 3.3-50 SME
C41	87-010-404-080		CAP, E 4.7-50 SME
C42	87-010-404-080		CAP, E 4.7-50 SME(YZ)
C43	87-010-197-080		C-CAP, S 0.01-25 B
C45	87-010-404-080		CAP, E 4.7-50 SME
C46	87-010-197-080		C-CAP, S 0.01-25 B
C47	87-010-197-080		C-CAP, S 0.01-25 B
C48	87-010-197-080		C-CAP, S 0.01-25 B
C49	87-010-197-080		C-CAP, S 0.01-25 B
C50	87-010-197-080		C-CAP, S 0.01-25 B
C51	87-010-197-080		C-CAP, S 0.01-25 B
C52	87-010-197-080		C-CAP, S 0.01-25 B(YE, YZ)
C53	87-010-196-080		C-CAP, S 0.1-25 F
C54	87-010-197-080		C-CAP, S 0.01-25 B(YE, YZ)
C55	87-014-049-080		CAP, PP 470P-100 J(YE, YZ)
C56	87-010-158-080		C-CAP, S 22P-50 SL(YE, YZ)
C56	87-010-152-080		C-CAP, S 8P-50 CH(YLH, YH)
C57	87-010-169-080		C-CAP, S 180P-50 SL(YE, YZ)
C58	87-014-050-080		CAP, PP 510P-100 J(YE, YZ)
C60	87-010-404-080		CAP, E 4.7-50 SME(YZ)
C61	87-010-401-080		CAP, E 1-50 SME
C62	87-010-403-080		CAP, E 3.3-50 SME
C63	87-014-057-080		CAP, PP 1000P-100 J
C64	87-010-405-080		CAP, E 10-50 SME
C67	87-010-220-080		C-CAP, S 0.018-25 B
C68	87-010-220-080		C-CAP, S 0.018-25 B
C69	87-010-404-080		CAP, E 4.7-50 SME
C70	87-010-404-080		CAP, E 4.7-50 SME
C73	87-010-404-080		CAP, E 4.7-50 SME
C74	87-010-404-080		CAP, E 4.7-50 SME
C75	87-010-248-080		CAP, E 220-10 SME
C76	87-010-312-080		C-CAP, S 15P-50 CH
C77	87-010-197-080		C-CAP, S 0.01-25 B
C78	87-010-197-080		C-CAP, S 0.01-25 B
C79	87-010-197-080		C-CAP, S 0.01-25 B
C80	87-010-384-080		CAP, E 100-25 SME
C81	87-010-186-080		C-CAP, S 4700P-50 B
C82	87-010-400-080		CAP, E 0.47-50 SME
C83	87-015-762-080		C-CAP, 68P SL
C84	87-010-164-080		C-CAP, S 68P-50 SL
C85	87-010-164-080		C-CAP, S 68P-50 SL
C86	87-018-134-080		CAP, TC-U 0.01-16 Y
C87	87-010-263-080		CAP, E 100-10(YLH, YH, YE)
C87	87-010-404-080		CAP, E 4.7-50 SME(YZ)
C88	87-010-381-080		CAP, E 330-16 SME
C100	87-010-197-080		C-CAP, S 0.01-25 B
C101	87-010-197-080		C-CAP, S 0.01-25 B
C102	87-010-311-080		C-CAP, S 12P-50 CH(YE, YZ)
C103	87-010-197-080		C-CAP, S 0.01-25 B(YE)
C103	87-010-311-080		C-CAP, S 12P-50 CH(YZ)
C104	87-010-197-080		C-CAP, S 0.01-25 B(YZ)
C106	87-010-145-080		C-CAP, S 1P-50 CH(YZ)
C110	87-010-263-080		CAP, E 100-10
C111	87-010-405-080		CAP, E 10-50 SME
C112	87-010-401-080		CAP, E 1-50 SME
C781	87-010-197-080		C-CAP, S 0.01-25 B
CF1	87-030-105-010		FLTR, BPMB6A(YZ)
CF2	82-799-621-010		FLTR, SFE10.7MS2-A(YZ)
CF2	87-008-261-010		FLTR, SFE10.7MA5-A(YLH, YH, YE)
CF3	87-008-261-010		FLTR, SFE10.7MA5-A(YZ)
CF4	87-008-261-010		FLTR, SFE10.7MA5-A

REF. NO	PART NO.	ｶﾝﾘ NO.	DESCRIPTION
CF5	82-794-670-010		BFU450C4N
J1	81-653-648-010		ANT TERM EARTH PAL〈YE, YZ〉
J1	81-653-638-110		ANT TERMINAL EARTH〈YLH, YH〉
J1	81-631-646-010		ANT TERM 2P PAL〈YE, YZ〉
J1	87-033-214-010		ANT TERM 4P(JT)〈YLH, YH〉
J2	81-754-629-010		CONNECTOR XH M 2P (UL)〈YE〉
L1	87-006-209-010		COIL, ANT FM 3/4 T
L2	87-006-210-010		COIL, ANT FM 2 3/4T
L3	87-006-200-010		COIL, RF FM 3-1/2T, L5
L4	87-006-201-010		COIL, RF FM3-1/2TS, L5
L5	87-006-201-010		COIL, RF FM3-1/2TS, L5〈YZ〉
L6	87-006-205-010		COIL, OSC FM(7K)
L7	87-003-231-080		C-COIL, S1UH
L8	87-008-427-010		COIL, FMIFT(4T)
L9	81-631-611-010		COIL, QUAD(SINGLE)
L11	87-008-452-010		FILTER, CFAZ-450
L12	87-006-207-010		COIL, ANT MW (3B)〈YE, YZ〉
L13	87-006-208-010		COIL, ANT LW〈YE, YZ〉
L14	82-794-687-010		COIL, OSC〈YE, YZ〉
L15	87-008-461-010		COIL, 2POLE MPX
L16	87-008-461-010		COIL, 2POLE MPX
L17	82-794-688-010		COIL, OSC LW〈YE, YZ〉
L18	87-008-421-010		COIL, FILTER AMTI-BIRDIE〈YZ〉
L19	87-003-098-080		COIL, 2.2UH
SFR1	87-024-174-080		SFR, 33K DIA6 V
SFR2	87-024-171-080		SFR, 4.7K DIA6 V
TC1	87-011-219-080		CAP, TRIMMER 10P VCT
TC2	87-011-219-080		CAP, TRIMMER 10P VCT
TC3	87-011-219-080		CAP, TRIMMER 10P VCT〈YZ〉
TC4	87-011-220-080		CAP, TRIMMER 20P VCT〈YE, YZ〉
TC5	87-011-221-080		TRIMMER. 30P VCT51
TC6	87-011-221-080		TRIMMER. 30P VCT51〈YE, YZ〉
WH802	82-VT1-605-010		CORD, FG 11P
X1	87-030-163-010		VIB, XTAL 7.2MHZ(NDK)
FRONT C. B			
C901	87-018-131-080		CAP, TC-U 1000P-50 B
C902	87-010-553-080		CAP, E 47-16
C903	87-010-498-080		CAP, E 10-16 5L
C904	87-010-494-080		CAP, E GAS 1/50
C905	87-018-131-080		CAP, TC-U 1000P-50 B
C906	87-010-497-080		CAP, E 4.7-35 5L
C907	87-010-494-080		CAP, E GAS 1/50
C908	87-010-494-080		CAP, E GAS 1/50
C909	87-018-134-080		CAP, TC-U 0.01-16 Y
C910	87-010-252-080		CAP, E(TAPG) 1000-6.3V
C911	87-018-209-080		CAP, TC-U 0.1-50 F
C912	87-018-209-080		CAP, TC-U 0.1-50 F
C913	87-018-209-080		CAP, TC-U 0.1-50 F
C915	87-010-381-080		CAP, E 330-16 SME
C916	87-010-381-080		CAP, E 330-16 SME
CF901	87-008-394-080		CF CST 4.19 MGW
FL901	80-VT1-608-010		FL, 9BT-83GK
L901	87-003-102-080		COIL, 10UH
L902	87-003-102-080		COIL, 10UH
L903	87-003-102-080		COIL, 10UH
L904	87-003-102-080		COIL, 10UH
RU901	87-002-669-010		IC, GP1U571X
SW901	87-036-215-080		SW, TACT EVQ21404M〈YLH, YH〉
SW901	87-036-259-080		SW, TACT SKHVBB〈YE, YZ〉
SW902	87-036-215-080		SW, TACT EVQ21404M〈YLH, YH〉
SW902	87-036-259-080		SW, TACT SKHVBB〈YE, YZ〉
SW903	87-036-215-080		SW, TACT EVQ21404M〈YLH, YH〉
SW903	87-036-259-080		SW, TACT SKHVBB〈YE, YZ〉
SW904	87-036-215-080		SW, TACT EVQ21404M〈YLH, YH〉
SW904	87-036-259-080		SW, TACT SKHVBB〈YE, YZ〉
SW905	87-036-215-080		SW, TACT EVQ21404M〈YLH, YH〉
SW905	87-036-259-080		SW, TACT SKHVBB〈YE, YZ〉
SW906	87-036-215-080		SW, TACT EVQ21404M〈YLH, YH〉
SW906	87-036-259-080		SW, TACT SKHVBB〈YE, YZ〉
SW907	87-036-215-080		SW, TACT EVQ21404M〈YLH, YH〉
SW907	87-036-259-080		SW, TACT SKHVBB〈YE, YZ〉
SW908	87-036-215-080		SW, TACT EVQ21404M〈YLH, YH〉
SW908	87-036-259-080		SW, TACT SKHVBB〈YE, YZ〉
SW909	87-036-215-080		SW, TACT EVQ21404M〈YLH, YH〉
SW909	87-036-259-080		SW, TACT SKHVBB〈YE, YZ〉
SW910	87-036-215-080		SW, TACT EVQ21404M〈YLH, YH〉
SW910	87-036-259-080		SW, TACT SKHVBB〈YE, YZ〉
SW911	87-036-215-080		SW, TACT EVQ21404M〈YLH, YH〉
SW911	87-036-259-080		SW, TACT SKHVBB〈YE, YZ〉
SW912	87-036-215-080		SW, TACT EVQ21404M〈YLH, YH〉
SW912	87-036-259-080		SW, TACT SKHVBB〈YE, YZ〉
SW913	87-036-215-080		SW, TACT EVQ21404M〈YLH, YH〉
SW913	87-036-259-080		SW, TACT SKHVBB〈YE, YZ〉
SW914	87-036-215-080		SW, TACT EVQ21404M〈YLH, YH〉
SW914	87-036-259-080		SW, TACT SKHVBB〈YE, YZ〉
SW915	87-036-215-080		SW, TACT EVQ21404M〈YLH, YH〉
SW915	87-036-259-080		SW, TACT SKHVBB〈YE, YZ〉
SW916	87-036-215-080		SW, TACT EVQ21404M〈YLH, YH〉
SW916	87-036-259-080		SW, TACT SKHVBB〈YE, YZ〉
SW917	87-036-215-080		SW, TACT EVQ21404M〈YLH, YH〉
SW917	87-036-259-080		SW, TACT SKHVBB〈YE, YZ〉
SW918	87-036-215-080		SW, TACT EVQ21404M〈YLH, YH〉
SW918	87-036-259-080		SW, TACT SKHVBB〈YE, YZ〉

○チップ抵抗部品コード／CHIP RESISTOR PART CODE

チップ抵抗部品コードの成り立ち
Chip resistor part coding

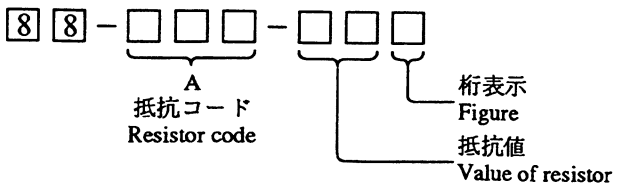

チップ抵抗
Chip resistor

Wattage 容量	Type 種類	Tolerance 許容誤差	Symbol 記号	Dimensions／寸法 (mm) Form/外形	L	W	t	Resistor code : A 抵抗コード : A
1/32W	1608	±5%	CJ	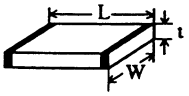	1.6	0.8	0.35	108
1/10W	2125	±5%	CJ		2	1.25	1.45	118
1/8W	3216	±5%	CJ		3.2	1.6	0.5 ~0.7	128

BLOCK DIAGRAM (TX-Z7000)

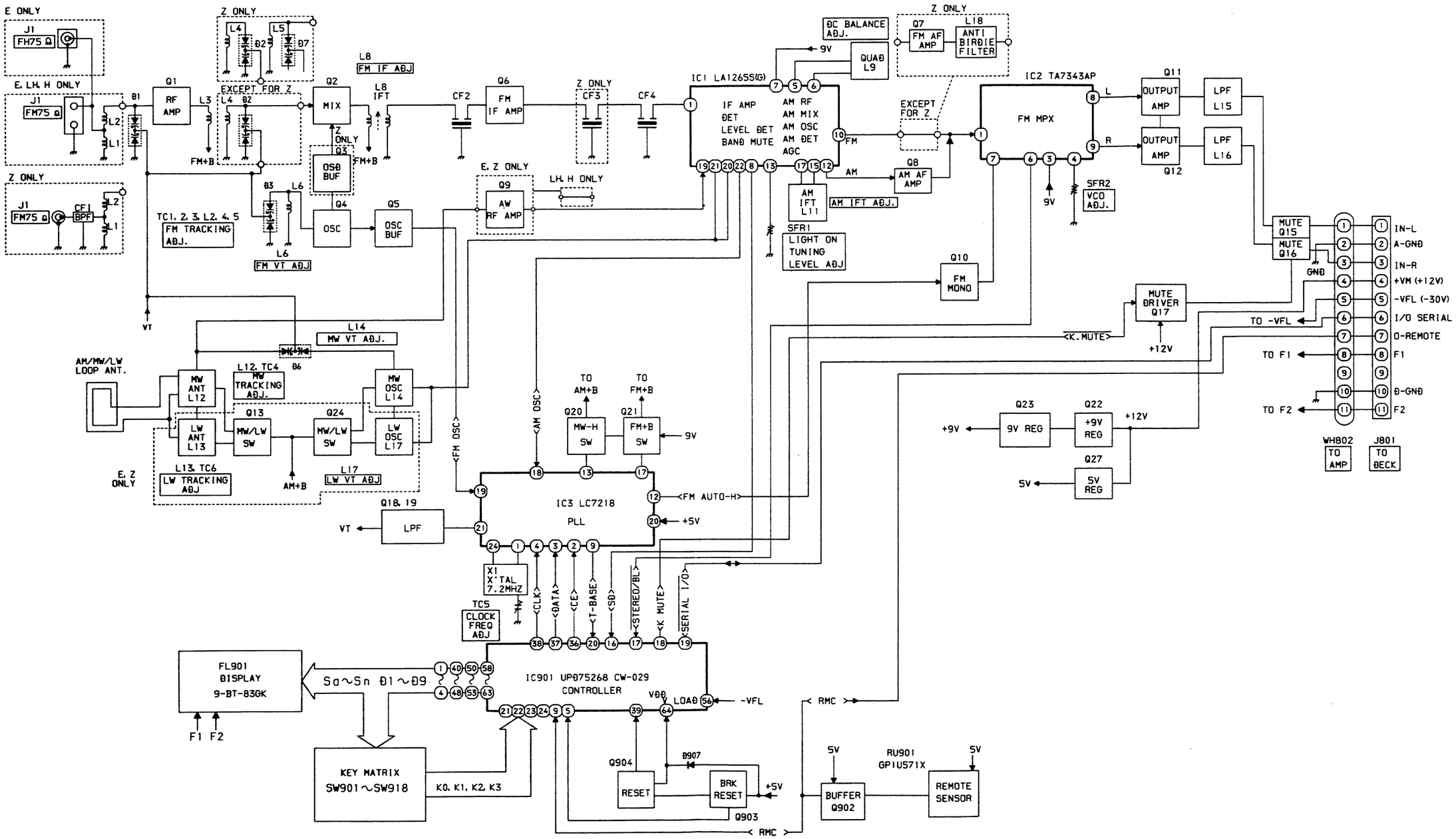

SCHEMATIC DIAGRAM — 1 (TX-Z7000H)

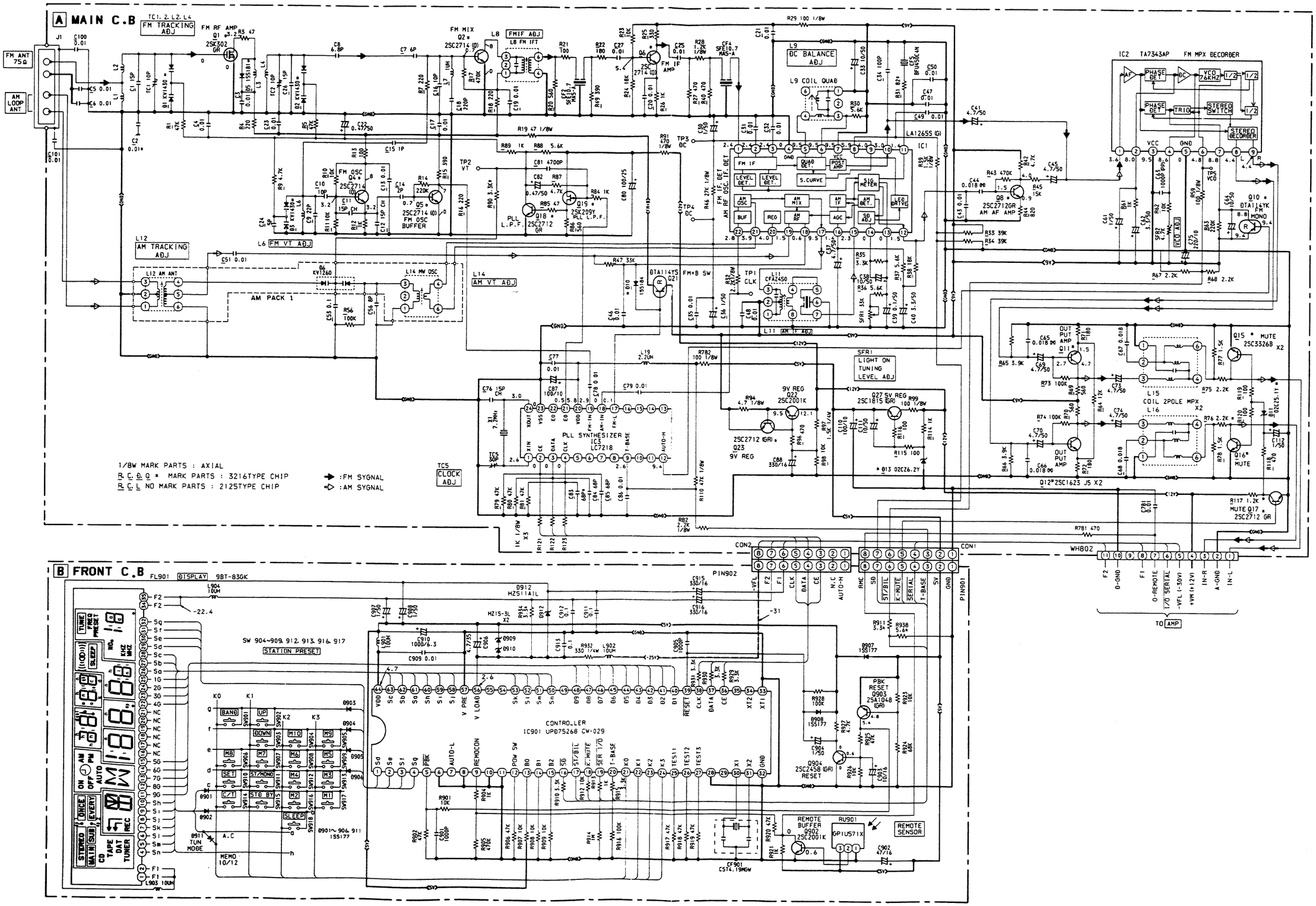

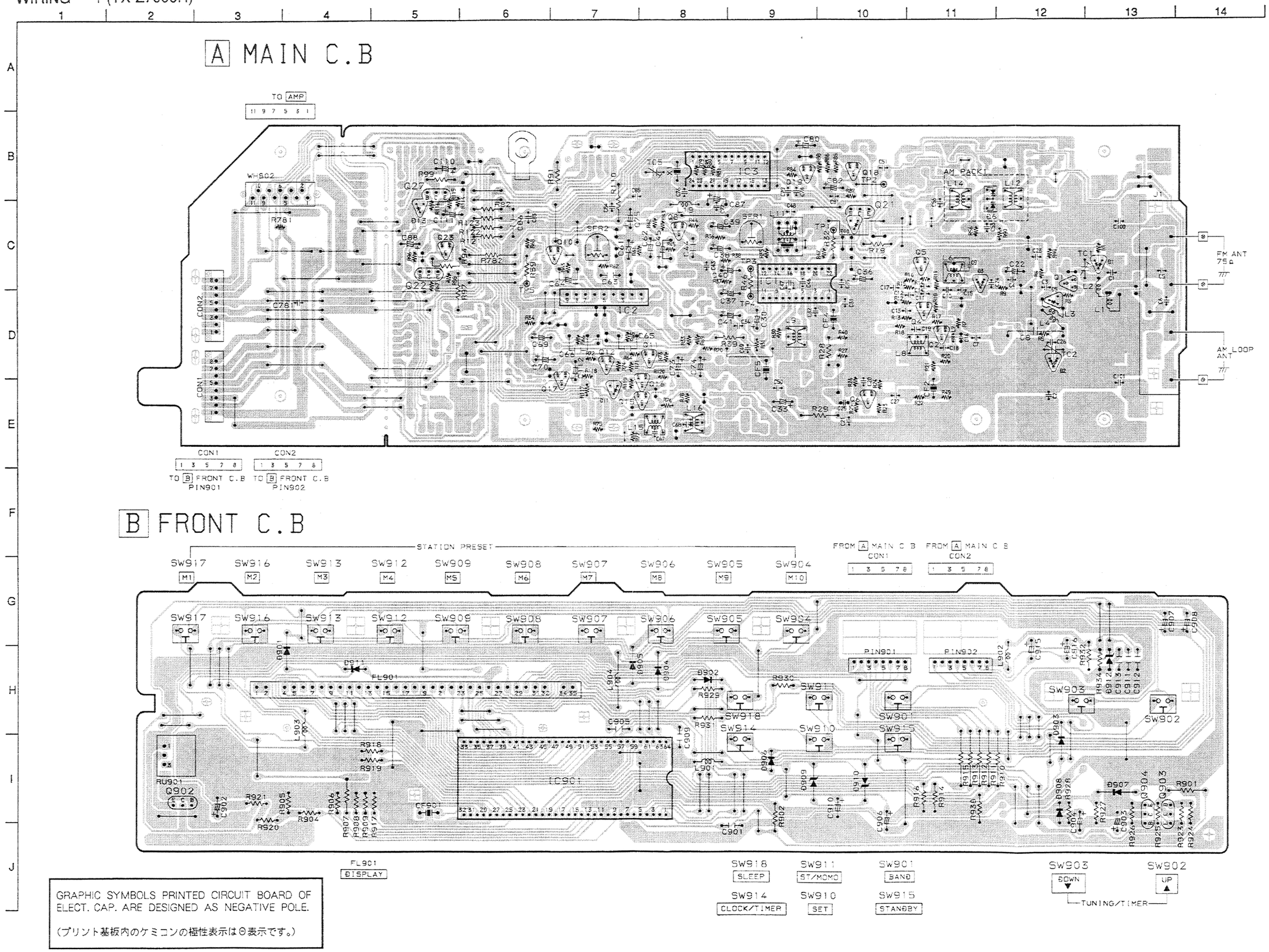

SCHEMATIC DIAGRAM — 2 (TX-Z7000E)

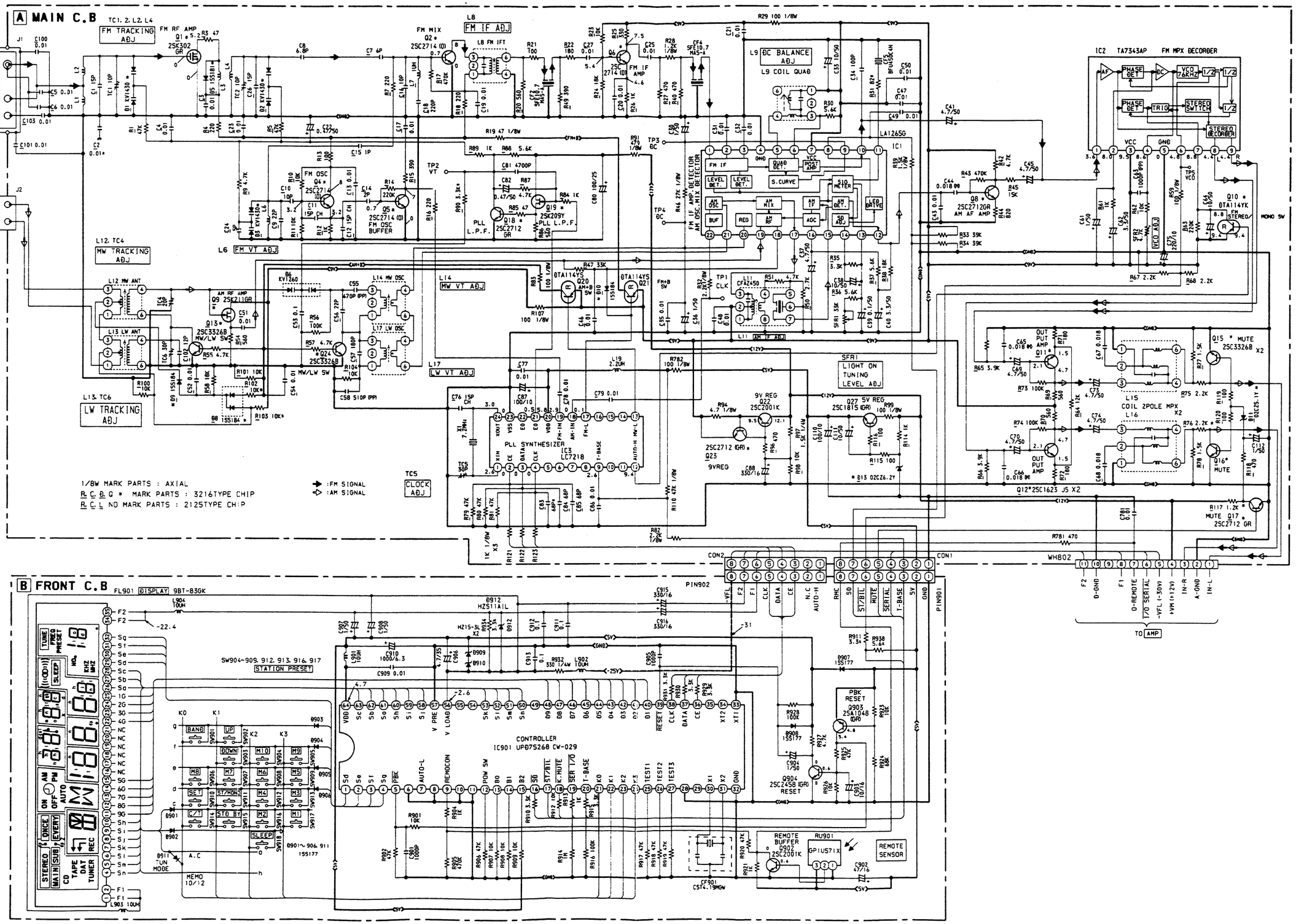

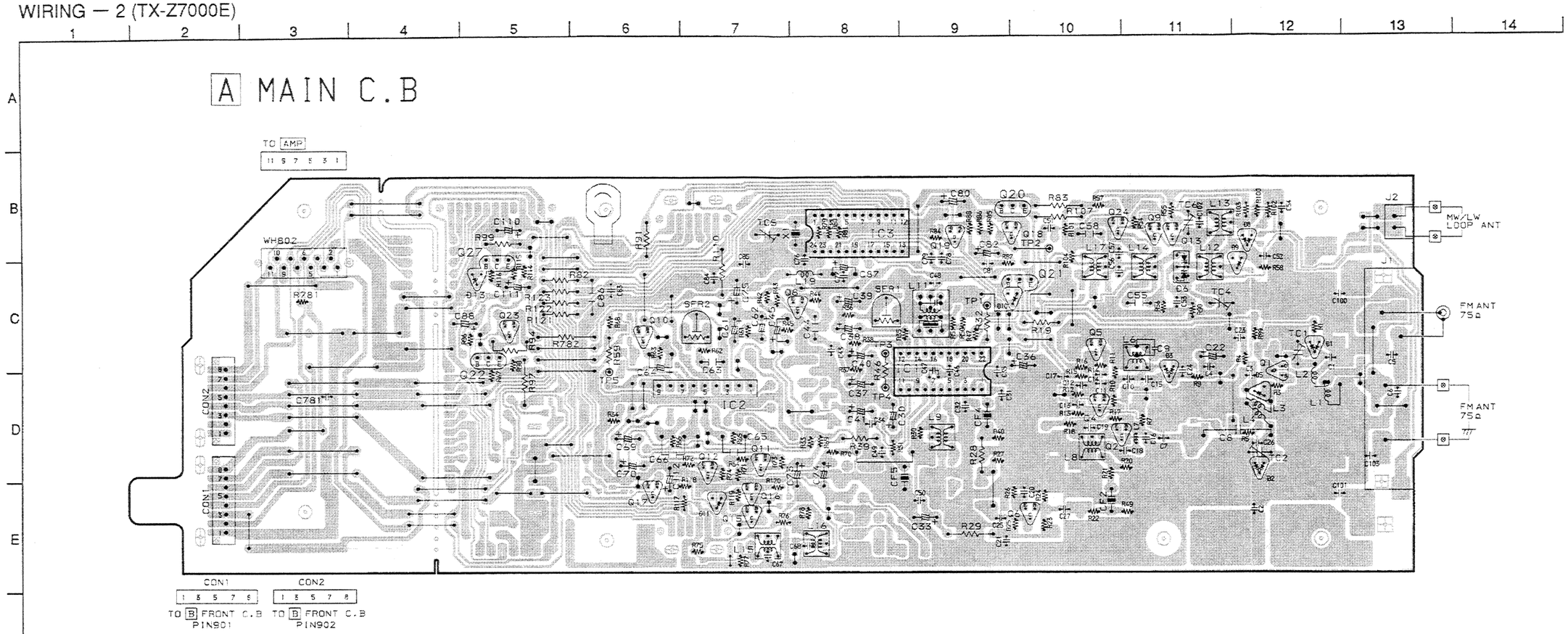

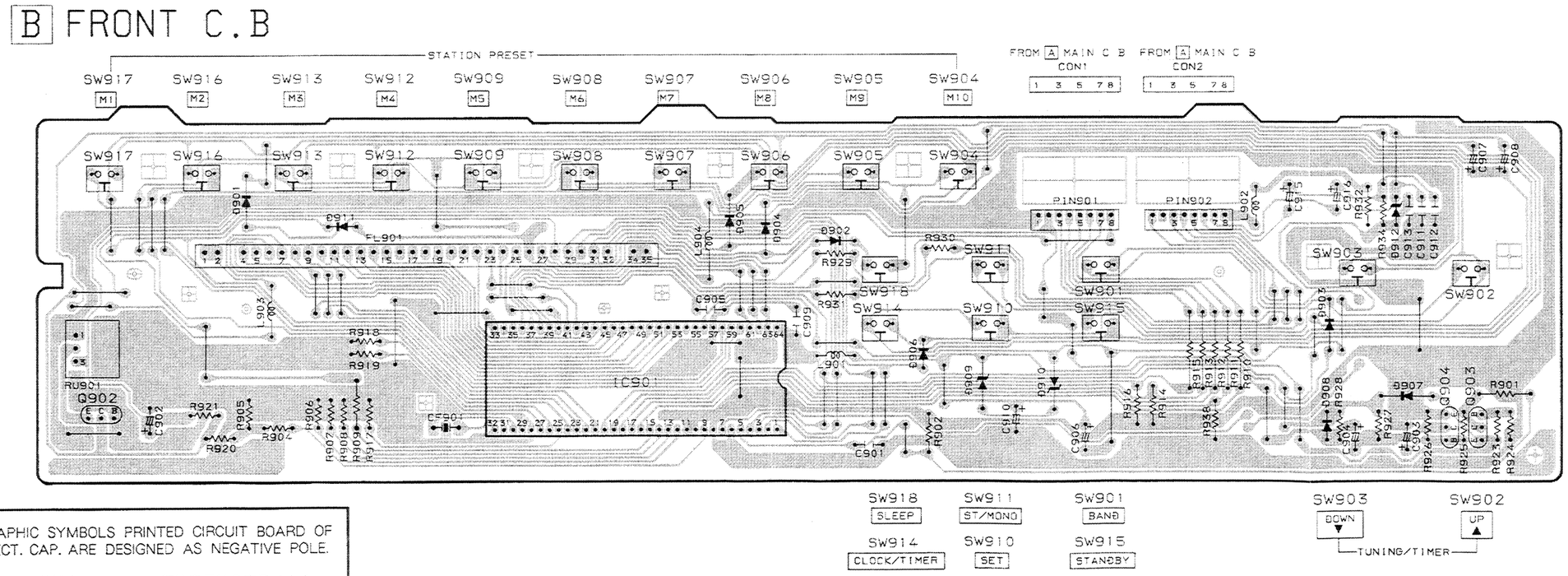

GRAPHIC SYMBOLS PRINTED CIRCUIT BOARD OF ELECT. CAP. ARE DESIGNED AS NEGATIVE POLE.

(プリント基板内のケミコンの極性表示は⊖表示です。)

SCHEMATIC DIAGRAM — 3 (TX-Z7000Z)

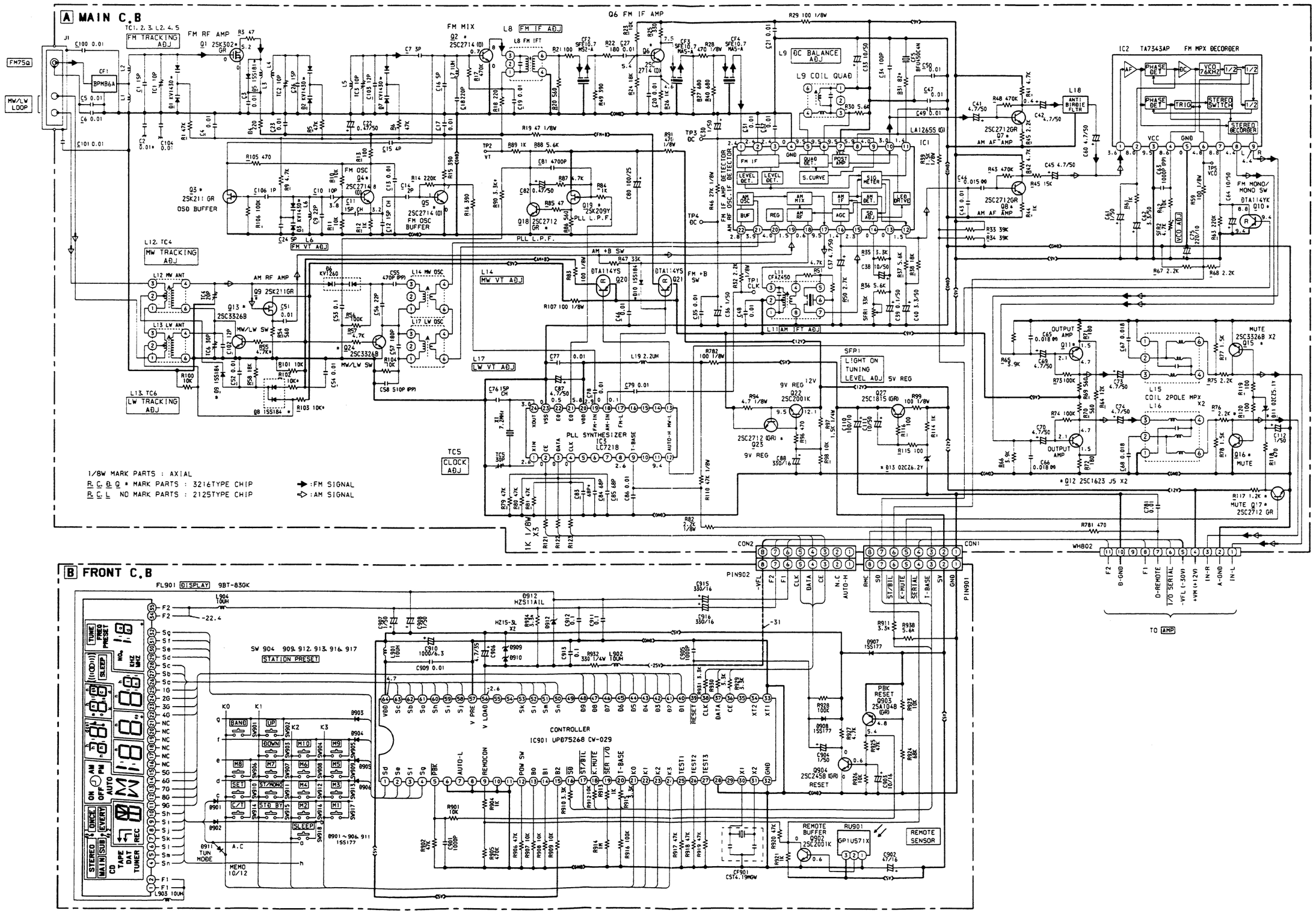

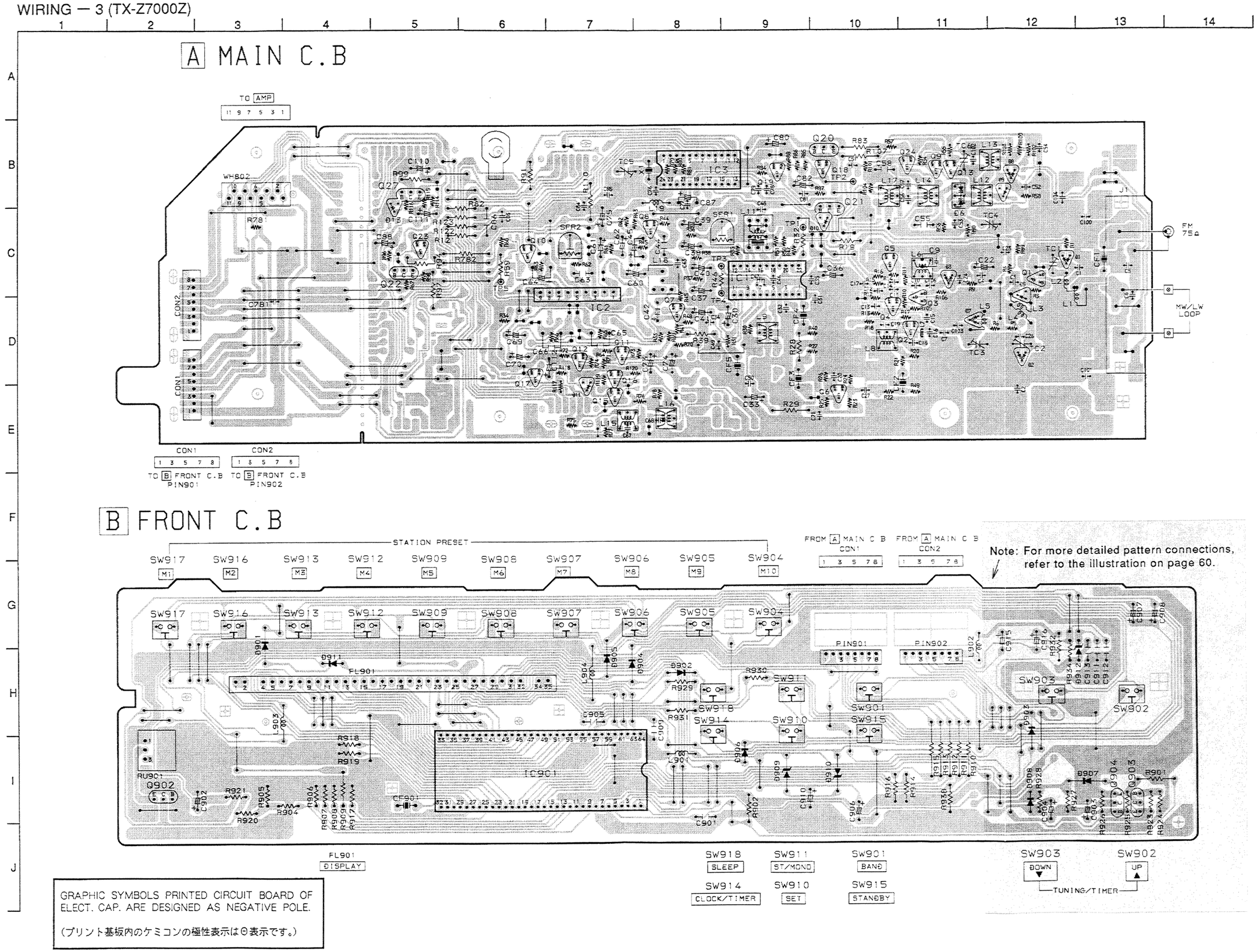

GRAPHIC SYMBOLS PRINTED CIRCUIT BOARD OF ELECT. CAP. ARE DESIGNED AS NEGATIVE POLE.

(プリント基板内のケミコンの極性表示は⊖表示です。)

ADJUSTMENT—1(TX—Z7000H)

A MAIN C.B

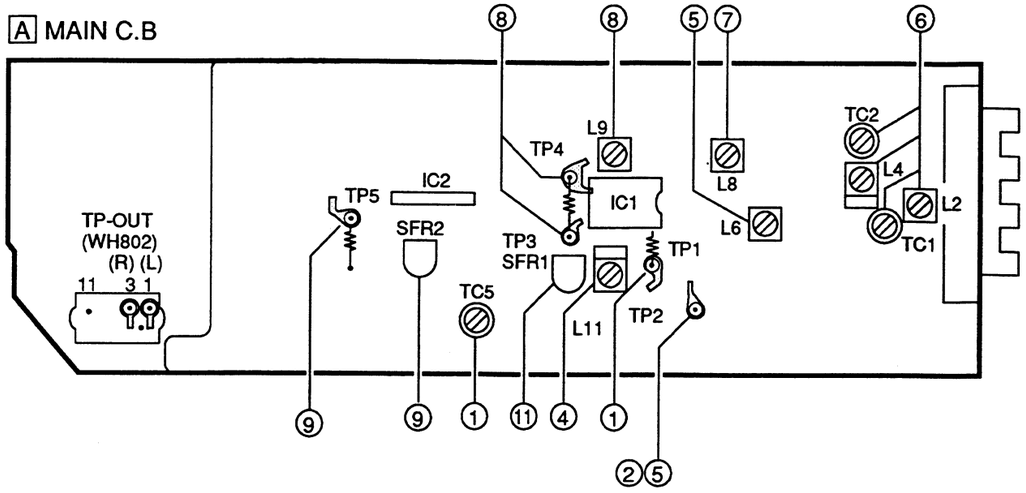

1. Clock Frequency Adjustment
   Settings: · Test point: TP1
   · Adjustment location: TC5
   Method: Set to AM 1602kHz and adjust so that the test point becomes 2052kHz±0.01kHz.

2. AM VT Check
   Settings: · Test point: TP2 (VT)
   Method: Set to AM 531kHz and check so that the test point becomes 1.1V±0.20V.

3. AM Tracking Check
   Settings: · Test point: TP-OUT (WH802)
   Method: Set to AM 999kHz and check so that the sensitivity becomes less than 56dB.

4. AM IF Adjustment
   Settings: · Test point: TP-OUT (WH802)
   L11 ····· 450kHz

5. FM VT Adjustment
   Settings: · Test point: TP2 (VT)
   · Adjustment location: L6
   Method: Set to FM 108.0MHz and adjust L6 so that the test point becomes 9.0V±0.05V.

6. FM Tracking Adjustment
   Settings: · Test point: TP-OUT (WH802)
   TC1, 2 ····· 108.0MHz
   L2, 4 ····· 87.5MHz

7. FM IF Adjustment
   Settings: · Test point: TP-OUT (WH802)
   L8 ····· 10.7MHz

8. DC Balance Adjustment
   Settings: · Test point: TP3, 4 TP-OUT (WH802) (Distortion)
   · Adjustment location: L9
   Method: Set to FM 98.0MHz and adjust L9 so that TP3 and TP4 output becomes 0V±0.02V.
   Next, check so that the distortion becomes less than 0.6%.

9. MPX VCO Adjustment
   Settings: · Test point: TP5
   · MODE SW: STEREO
   · Adjustment location: SFR2
   Method: Connect a capacitor and resitor as below. Set to FM 98.0MHz non modulation and adjust so that the frequency at test point becomes 38kHz±0.05kHz.

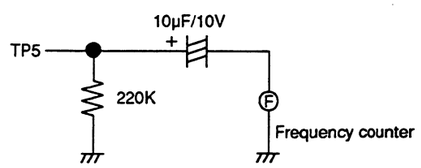

10. Separation Check
    Settings: · Test point: TP-OUT (WH802)
    Method: Set to FM 98.0MHz and check the separation at TP-OUT becomes more than 27dB.

11. Light on tunning LED Adjustment
    Settings: · Adjustment location: SFR1
    · Input level: 18dB
    Method: Set to FM 98.0MHz and adjust TUNNING LED to light on by SFR1. After that, LED goes out by 2dB down.

PRACTICAL SERVICE FIGURE —1
(TX—Z7000 H)

<FM SECTION>

IHF Sensitivity:	4±4dB (at 87.5MHz)
(THD 3%)	2±3dB (at 98.0/108.0MHz)
S/N 50dB Quieting Sensitivity:	Less than 34dB (at 87.5/98.0/108.0MHz)
Signal to Noise Ratio:	(MONO) More than 72dB (at 98.0MHz) (STEREO) More than 65dB (at 98.0MHz)
Distortion:	(MONO) Less than 0.6% (at 98.0MHz) (STEREO) Less than 1.5% (at 98.0MHz)
Stereo Separation:	More than 27dB
Intermediate Frequency:	10.7MHz

<AM SECTION>

Sensitivity:	56±4dB (at 603kHz)
(S/N 20dB)	52±4dB (at 999/1404kHz)
Distortion:	Less than 1.5% (at 999kHz)
Intermediate Frequency:	450kHz

ADJUSTMENT—2 (TX—Z7000E, Z)

A MAIN C.B

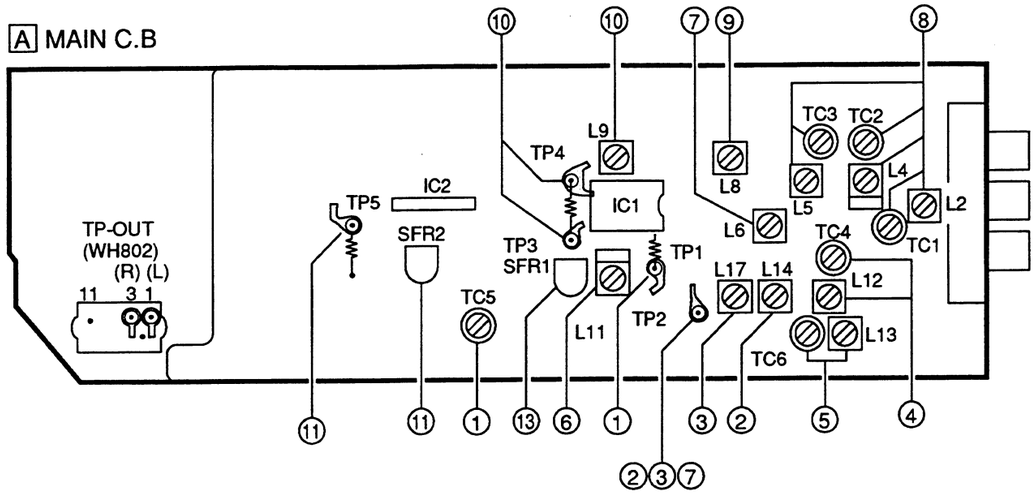

1. Clock Frequency Adjustment
   Settings: · Test point: TP1
   · Adjustment location: TC5
   Method: Set to MW 1611kHz and adjust so that the test point becomes 2061kHz±0.01kHz.

2. MW VT Adjustment
   Settings: · Test point: TP2 (VT)
   · Adjustment location: L14
   Method: Set to MW 522kHz and adjust L14 so that the test point becomes 1.0V±0.05V.

3. LW VT Adjustment
   Settings: · Test point: TP2 (VT)
   · Adjustment location: L17
   Method: Set to LW 144kHz and adjust L17 so that the test point becomes 1.3V±0.05V.

4. MW Tracking Adjustment
   Settings: · Test point: TP-OUT (WH802)
   L12 ····· 603kHz
   TC4 ····· 1,404kHz

5. LW Tracking Adjustment
   Settings: · Test point: TP-OUT (WH802)
   L13 ····· 144kHz
   TC6 ····· 290kHz

6. AM IF Adjustment
   Settings: · Test point: TP-OUT (WH802)
   L11 ····· 450kHz

7. FM VT Adjustment
   Settings: · Test point: TP2 (VT)
   · Adjustment location: L6
   Method: Set to FM 108.0MHz and adjust L6 so that the test point becomes 9.0V±0.05V.

8. FM Tracking Adjustment
   Settings: · Test point: TP-OUT (WH802)
   L2, 4 ····· 87.5MHz (E)
   L2, 4, 5 ····· 87.5MHz (Z)
   TC1, 2 ····· 108.0MHz (E)
   TC1, 2, 3 ····· 108.0MHz (Z)

9. FM IF Adjustment
   Settings: · Test point: TP-OUT (WH802)
   L8 ····· 10.7MHz

10. DC Balance Adjustment
    Settings: · Test point: TP3, 4 TP-OUT (WH802) (Distortion)
    · Adjustment location: L9
    Method: Set to FM 98.0MHz and adjust L9 so that TP3 and TP4 output becomes 0V±0.02V. Next, check so that the distortion becomes less than 0.6%.

11. MPX VCO Adjustment
    Settings: · Test point: TP5
    · MODE SW: STEREO
    · Adjustment location: SFR2
    Method: Connect a capacitor and resitor as below. Set to FM 98.0MHz non modulation and adjust so that the frequency at test point becomes 38kHz±0.05kHz.

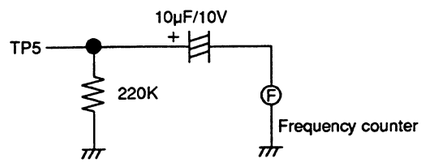

12. Separation Check
    Settings: · Test point: TP-OUT (WH802)
    Method: Set to FM 98.0MHz and check the separation at TP-OUT becomes more than 27dB.

13. Light on tunning LED Adjustment
    Settings: · Adjustment location: SFR1
    · Input level: 18dB
    Method: Set to FM 98.0MHz and adjust TUNNING LED to light on by SFR1. After that, LED goes out by 2dB down.

PRACTICAL SERVICE FIGURE—2 (TX—Z7000E, Z)

<FM SECTION>

Usable Sensitivity: (THD 3%)
4±4dB (at 87.5MHz) (E)
8±4dB (at 87.5MHz) (Z)
2±4dB (at 98.0/108.0MHz) (E)
6±4dB (at 98.0/108.0MHz) (Z)

S/N 50dB Quieting Sensitivity:
Less than 34dB
(at 87.5/98.0/108.0MHz) (E)
Less than 38dB
(at 87.5/98.0/108.0MHz) (Z)

Signal to Noise Ratio: (MONO)
More than 72dB (at 98.0MHz) (E)
More than 68dB (at 98.0MHz) (Z)
(STEREO)
More than 65dB (at 98.0MHz) (E)
More than 60dB (at 98.0MHz) (Z)

Total Harmonic Distortion:
(MONO)
Less than 0.6% (at 98.0MHz)
(STEREO)
Less than 1.5% (at 98.0MHz)

Stereo Separation: More than 27dB

Intermediate Frequency:
10.7MHz

<MW SECTION>

Sensitivity: (S/N 20dB)
56±4dB (at 603kHz)
52±4dB (at 999/1404kHz)

Total Harmonic Distortion:
Less than 1.5% (at 999kHz)

Intermediate Frequency:
450kHz

<LW SECTION>

Sensitivity: (S/N 20dB)
63±5dB (at 144kHz)
60±5dB (at 198/290kHz)

Total Harmonic Distortion:
Less than 1.2% (at 198 kHz)

Intermediate Frequency:
450kHz

IC DESCRIPTION (TX-Z7000)

IC, μ PD75268CW – 029

Pin No.	Pin Name	I/O	Description
1~4	Sd~Sg	O	FL display segment signal outputs, key scan signal outputs. Active "H"
5	$\overline{\text{PBK}}$	I	Power failure detection input. When "L" level continues for 30 ms or more, a power failure is detected (the unit enters the backup mode). 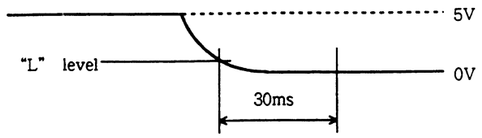
6	———	–	Not used (connected to ground).
7	AUTO – L	O	When an FM broadcast is received, this pin outputs a signal depending on the AUTO condition selected by the MODE key. Active "L" when the AUTO indicator lights. • Even if the AUTO indicator changes when the frequency is being set during timer programming, the output follows the condition currently received.
8	———	–	Not used (connected to ground).
9	REMOCON	I	Serial data input for remote control. Active "H" (the rise is detected).
10	———	–	Not used (connected to ground).
11	———	–	Not used (connected to ground).
12	POW SW	I/O	Power control input port. The power is turned on and off a alternately each time the power switch of the amplifier is pressed.
13	B0	I	These input pins select the frequency range, etc. with the 3 bits depending on the destination of the units.
14	B2		
15	B1		
16	$\overline{\text{SD}}$	I	Input to stop auto scanning. Active "L". • The input is not accepted during power off. • The input cause "TUNE" to light. • Searches for SD signals every 5 ms during auto scanning. When 4 "L" pulses are conuted, sacnning will stop. • SD is not detected during manual tuning.
17	$\overline{\text{STEREO}}$	I	Input which causes the $\overline{\text{STEREO}}$ indicator to light. Active "L". • This input is not accepted during power off.
18	$\overline{\text{K • MUTE}}$	O	Outputs a muting signal when a key is operated.
19	$\overline{\text{SER I/O}}$	I/O	8 – bit serial data input/output.
20	T – BASE	I	Receives 8Hz pulses from the PLL (LC7218) as a clock signal timing.
21~24	KO~K3	I	Key matrix inputs (K2 and K3 are not used and connected to ground).
25	TEST1	I	Test mode setting inputs.
26	TEST2		
27	TEST3		
28	AC CLK	I	Receives the commercial power frequency (the AC level is 5V) as a reference signal for the clock. Not used (connected to ground).
29	———	–	Not used (not connected).
30	X1	–	A ceramic oscillator which generates the main system clock signal (4.19MHz) is connected.
31	X2		
32	GND	–	Ground pin.
33	XT1	–	Not used (connected to ground).
34	XT2		Not used (not connected).
35	POW ON	–	Not used (not connected). Goes "H"during power on and "L"during power off.
36	CE	O	Output ports which transmit serial data to the PLL (LC7218). Active "H".
37	DATA		
38	CLK		
39	$\overline{\text{RESET}}$	I	System reset input. When the TUNER MODE and BAND switches are pressed and held for 1 second, the clock and preset stations are reset.

Pin No.	Pin Name	I/O	Description
40~48	D1~D9	O	FL display digit outputs.
49	———	–	Not used (not connected).
50	Sn	O	FL display segment outputs.
51	Sm		
52	Sℓ		
53	Sk		
54	———	–	Not used (not connected).
55	———		
56	V LOAD	I	Supplies power (–25V) to the output buffer of the FL display driver.
57	V PRE	I	Connected to ground.
58	Sj	O	FL display segment outputs.
59	Si		
60	Sh		
61	Sa		
62	Sb		
63	Sc		
64	VDD	–	+5V power terminal.

IC, LC7218

Pin No.	Pin Name	I/O	Description
1 24	X IN X OUT	–	Clock oscillator connection pins. A 7.2MHz crystal oscillator is connected.
2 3 4	CE DATA CLK	I	When a key is operated, signals are transferred from the CPU. Active "H".
5 ~ 8	———	–	Unused (Not connected).
9	T – BASE	O	Outputs an 8Hz signal. Transfers it to the CPU as a time base clock signal.
10	———	–	Unused (Not connected).
11	———	O	Unused (Not connected).
12	AUTO – H	–	Outputs "H" when FM stereo switching is set to AUTO.
13	MW (AM) – L	O	Outputs "L" when an MW (AM) broadcast is received.
14 15 16	———	–	Unused (Not connected).
17	FM – L	O	Outputs "L" when an FM broadcast is received.
18	AM – IN	I	AM local oscillation input.
19	FM – IN	I	FM local oscillation input.
20	VDD	–	Power supply pin. 5V ± 10%
21	EO_1	O	PLL error output.
22	EO_2	–	Unused (Not connected).
23	VSS	–	Ground pin.

EXPLODED VIEW (TX-Z7000)

REF. NO.	PART NO.	DESCRIPTION
A	87-067-641-019	UTT2+3-8 W/O SLOT BLK
B	87-067-660-019	BVT2+3-8 W/O SLOT BLK
C	87-067-632-019	BVT2+3-15 W CONVEX
D	87-067-584-010	BVT2+3-6 W/O SLOT

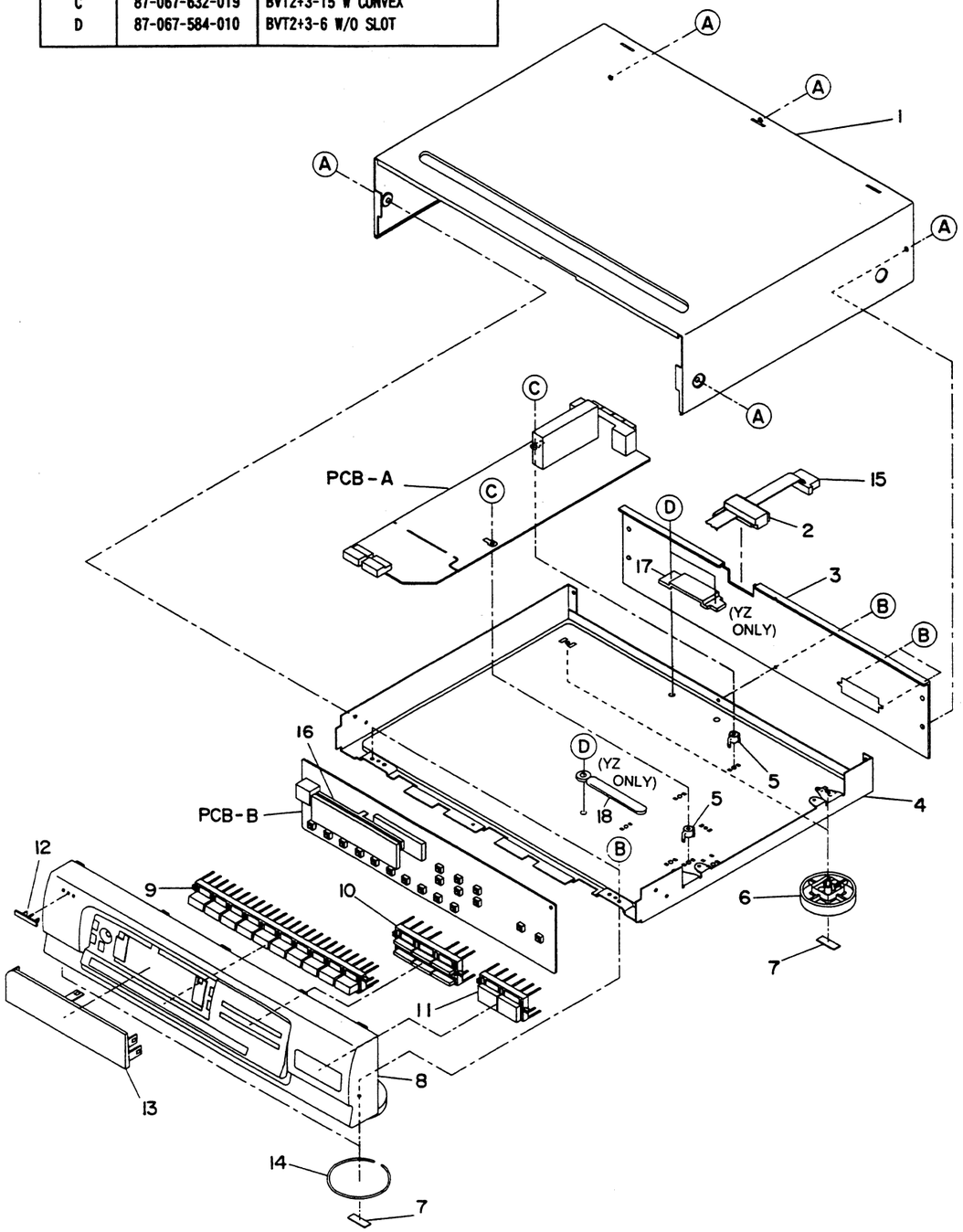

MECHANICAL PARTS LIST (TX-Z7000)

DESCRIPTION で判断できない物は "REFERENCE NAME LIST" を参照してください。
If can't understand for Description please kindly refer to "REFERENCE NAME LIST".

PART NO. CHANGED TO	REF. NO.	PART NO.	DESCRIPTION	COMMON MODEL	Q,TY
	1	★82-VT1-009-119	CAB, STEEL	※	1
	2	★89-VT5-202-010	BUSHING, CORD		1
	3	★82-VT1-010-019	PANEL, REAR YHJBN (YH)	※	1
	3	★82-VT1-016-019	PANEL, REAR YLHJBN (YLH)	※	1
	3	★82-VT1-012-019	PANEL, REAR YEBNE (YE)	※	1
	3	★82-VT1-013-019	PANEL, REAR YZBNE (YZ)	※	1
	4	---	CHASSIS, MAIN		1
	5	---	HOLDER, PCB		2
	6	★81-VX1-012-019	FOOT, REAR		2
	7	★82-VW2-211-019	FELT, 20 − 7.5 − 2		4
	8	★82-VT1-007-119	CAB, FR EX	※	1
	9	★82-VT1-002-119	KEY, 10	※	1
	10	★82-VT1-003-019	KEY, BAND	※	1
	11	★82-VT1-004-019	KEY, UP／DOWN	※	1
	12	★81-DS1-011-019	BADGE, AIWA N		1
	13	★82-VT1-005-019	WINDOW, TU	※	1
	14	★81-VW1-015-019	RING FOOT		2
	15	★82-VT1-605-010	CORD, FG 11P	※	1
	16	★81-690-201-110	GUIDE, FL		1
	17	★81-VX1-210-110	HLDR, WIRE G (YZ)		1
	18	★87-038-039-010	WIRE, BINDER (YZ)		1

MODEL NO.

SX – Z3000

■SPEAKER LIST (SX – Z3000)

REF. NO.	PART NO.	DESCRIPTION
1	82-VS2-002-010	PANEL WOOFER (H,HE)
2	82-VS2-023-010	PANEL W E (E,K,Z)
3	82-VS2-012-010	PANEL TW ASSY (H,HE)
4	82-VS2-021-010	PANEL T ASSY E (E,K,Z)
5	82-VS3-008-010	GRILL FRAME ASSY (H,HE)
6	82-VS3-006-010	GRILL FRAME ASSY (E,K,Z)
7	82-VS3-601-010	SPEAKER WOOFER (H,HE)
8	82-VS2-604-010	SPEAKER WOOFER (E,K,Z)
9	89-VS5-609-010	SPEAKER TWEETER (H,HE)
10	82-MS1-603-010	SPEAKER TWEETER (E,K,Z)
11	81-NSC-602-010	SPEAKER CERAMIC (H,HE)
12	82-VS2-016-010	PANEL M ASSY (H,HE)
13	82-VS2-022-010	PANEL M ASSY E (E,K,Z)
14	81-672-612-010	SPEAKER CORD (H,HE)
15	82-VS2-025-010	SPEAKER CORD (E,K,Z)

REFERENCE NAME LIST

ELECTRICAL SECTION

DESCRIPTION	REFERENCE NAME
ANT	ANTENNAS
C-	CHIP
C-CAP	CAP, CHIP
C-CAP TN	CAP, CHIP TANTALUM
C-COIL	COIL, CHIP
C-DI	DIODE, CHIP
C-DIODE	DIODE, CHIP
C-FET	FET, CHIP
C-FOTR	FILTER, CHIP
C-JACK	JACK, CHIP
C-LED	LED, CHIP
C-RES	RES, CHIP
C-SFR	SFR, CHIP
C-SLIDE SW	SLIDE SWITCH, CHIP
C-SW	SWITCH, CHIP
C-TR	TRANSISTOR, CHIP
C-VR	VOLUME, CHIP
C-ZENER	ZENER, CHIP
CAP, CER	CAP, CERA-SOL
CAP, E	CAP, ELECT
CAP, M/F	CAP, FILM
CAP, TC	CAP, CERA-SOL
CAP, TC-U	CAP, CERA-SOL SS
CAP, TN	CAP, TANTALUM
CERA FIL	FILTER, CERAMIC
CF	FILTER, CERAMIC
DL	DELAY LINE
E/CAP	CAP, ELECT
FILT	FILTER
FLTR	FILTER
FUSE RES	RES, FUSE
MOT	MOTOR
P-DIODE	PHOTO DIODE
P-SNSR	PHOTO SENSER
P-TR	PHOTO TRANSISTOR
POLY VARI	VARIABLE CAPACITOR
PPCAP	CAP, PP
PT	POWER TRANSFORMER
PTR, RES	PTR, MELF
RC	REMOTE CONTROLLER
RES NF	RES, NON-FLAMMABLE
RESO	RESONATOR
SHLD	SHIELD
SOL	SOLENOID
SPKR	SPEAKER
SW, LVR	SWITCH, LEVER
SW, RTRY	SWITCH, ROTARY
SW, SL	SWITCH, SLIDE
TC CAP	CAP, CERA-SOL
THMS	THERMISTOR
TR	TRANSISTOR
TRIMMER	CAP, TRIMMER
TUN-CAP	VARIABLE CAPACITOR
VIB, CER	RESONATOR, CERAMIC
VIB, XTAL	RESONATOR, CRYSTAL
VR	VOLUME
ZENER	DIODE, ZENER
ｻｰｼﾞｻﾌﾟﾚｯｻ	SERGESUPPRESSOR
ｾﾗｺﾝ	CAP, CERA

MECHANICAL SECTION

DESCRIPTION	REFERENCE NAME
ADHESHIVE	SHEET ADHESHIVE
AZ	AZIMUTH
BAR-ANT	BAR-ANTENNA
BAT	BATTERY
BAT, CONTACT ASSY	BATTERY CONTACT ASSY
BATT	BATTERY
BRG	BEARING
BTN	BUTTON
CAB	CABINET
CASS	CASSETTE
CHAS	CHASSIS
CLR	COLLAR
CONT	CONTROL
CRSR	CURSOR
CU	CUSHION
CUSH	CUSHION
DIR	DIRECTION
DUBB	DUBBING
FL	FRONT LOADING
FLY-WHL	FLYWHEEL
FR	FRONT
FUN	FUNCTION
G-CU	G-CUSHION
HDL	HANDOL
HIMERON	CLOTH
HINGE, BAT	HINGE, BATTERY
HLDR	HOLDER
HT-SINK	HEAT SINK
IB	INSTRUCTION BOOKLET
IDLE	IDLER
IND, L-R	INDICATOR, L-R
KEY, CONT	KEY, CONTROL
KEY, PRGM	KEY, PROGRAM
KNOB, SL	KNOB, SLIDE
KNOB, VOL REV	KNOB, VOLUME REV
LBL	LABEL
LID, BATT	LID, BATTERY
LID, CASS	LID, CASSETTE
LVR	LEVER
P-SP	P-SPRING
PANEL, CONT	PANEL, CONTORL
PANEL, FR	PANEL, FRONT
PRGM	PROGRAM
PULLY, LOAD MO	PULLY, LOADING MOTOR
RBN	RIBBON
S-	SPECIAL
SEG	SEGMENT
SH	SHEET
SHLD-SH	SHIELD-SHEET
SL	SLIDE
SP	SPRING
SP-SCREW	SPECIAL-SCREW
SPACER, BAT	SPACER, BATTERY
SPR	SPRING
SPR-P	P-SPRING
SPR-PC-PUSH	P-SPRING, C-PUSH
SW	SWITCH
T-SP	T-SPRING
TERM	TERMINAL
TRIG	TRIGGER
TUN	TUNING
VOL	VOLUME
W	WASHER
WHL	WHEEL
WORM-WHL	WORM-WHEEL
ｼｸｱｰﾑ	ARM, SHAFT
ｼｸｶﾞｲﾄﾞ	GUIDE, SHAFT
ｽﾄﾗｯﾌﾟ	STRAP
ﾋﾝｼﾞ	HINGE